M. B. RODRIGUEZ.

X-RAY APPARATUS.

APPLICATION FILED SEPT. 18, 1919.

1,390,250. Patented Sept. 6, 1921.

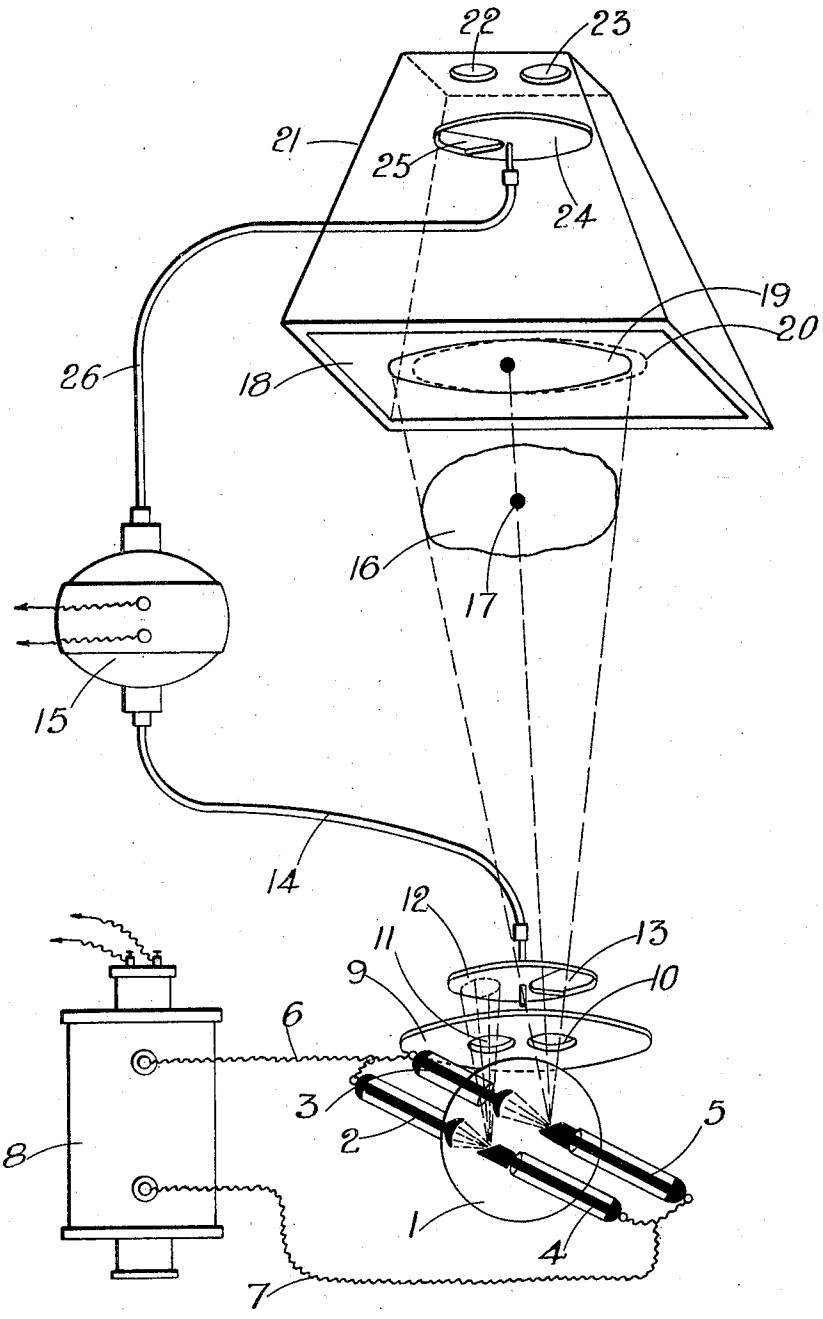

Matias Balsera Rodriguez
by W. E. Evans
attorney.

UNITED STATES PATENT OFFICE.

MATIAS BALSERA RODRIGUEZ, OF LONDON, ENGLAND.

X-RAY APPARATUS.

1,390,250. Specification of Letters Patent. Patented Sept. 6, 1921.

Application filed September 18, 1919. Serial No. 324,697.

To all whom it may concern:

Be it known that I, MATIAS BALSERA RODRIGUEZ, a subject of the King of Spain, residing at 54 Tavistock Square, London, W. C., England, have invented certain new and useful Improvements Relating to X-Ray Apparatus, of which the following is a specification.

This invention relates to X-ray apparatus and has for its object to provide an apparatus by which a stereoscopic image of the body under examination may be directly seen on the fluorescent screen of the apparatus and any foreign objects present located therein without recourse to photography or to calculation.

In X-ray apparatus as usually provided it is possible for example for the shadow of the bony portions of the skeleton of the body to be seen on the fluorescent screen as well as the shadow of the foreign objects that may be present therein. These shadows, however, are flat and out of the three dimensions that characterize solids, they have only two, namely length and width. It is thus impossible for the true shape of the foreign bodies to be seen and it is also impossible to see at what depth within the body under examination they are situated.

According to the invention two sets of alternating stereoscopic shadows of the object under examination are thrown on the screen whereby a stereoscopic view of the body under examination is obtained similar to that produced by the well known stereoscopic apparatus.

The invention comprises the features hereinafter described.

The invention is illustrated diagrammatically in the accompanying drawing.

In carrying the invention into effect as illustrated in the accompanying drawing, I provide an X-ray tube or bulb 1 similar to those of the ordinary X-ray apparatus with the difference, however, that two cathodes 2, 3 and two anti-cathodes 4, 5 are provided instead of one of each. The respective cathodes and anti-cathodes are disposed parallel to each other and they may be disposed for example at about six centimeters from each other. The cathodes are joined electrically from without as are also the anti-cathodes and each pair is connected with the wires 6, 7 of an electric transformer 8 of usual form. A stationary opaque plate or disk 9 made preferably of lead prevents the passage of X-rays downward and these rays can thus only pass through the openings 10 and 11 cut out of the plate or disk and respectively beneath each anti-cathode. Another opaque disk 12 made preferably of lead is disposed beneath the disk or plate 9 and serves as an obturator in front of the openings 10 and 11. The disk 12 has one part 13 or more than one part cut away leaving one solid part 12 or a number of solid parts where more than one part is cut away from the disk.

The metal is so distributed in the disk 12 that it is practically balanced and the disk is rotated by means of an electric motor 15 through a flexible transmission member 14. It will be understood that the disk 12 on rotation allows the X-rays to pass alternately through the opening 10 and the opening 11 but never through both at the same time.

In the diagram, 16 represents the body under examination and 17 the foreign body to be viewed. The fluorescent screen is indicated 18 and the projection of the shadow of the body 16 on the X-rays coming through the opening 10 is indicated at 19 while the same shadow projected when the rays come through the opening 11 is indicated at 20. It will be understood that the fluorescent screen 18 is placed within a dark chamber such as 21. The dark chamber 21 is provided with two small eye apertures 22 and 23 which are alternately blocked by the opaque disk 24 which is provided of a form similar to the disk 12 and with an open portion 25 and a solid portion 24. The disk 24 receives the same movement as the disk 12 through the flexible transmission member 26 from the motor 15. The relative positions of the disks 12 and 24 are such that when the former blocks the opening 10, the latter blocks the opening 22 and when the opening 11 is blocked the opening 23 is blocked also. The obturators 12 and 24 work therefore synchronously. The electric motor 15 works synchronously with the interrupters of the primary circuit of the electro-magnet 8 in such manner that to each obturation of the openings there corresponds an issue of current into the X-ray tube 1. On the apparatus being started to work the operator will on looking through the eye apertures 22 and 23 be able to observe the

body 16 in stereoscopic view and at once to locate the exact position of the foreign body 17.

I claim:

1. An X-ray apparatus for producing stereoscopic shadows of the object under examination directly upon a fluorescent screen wherein two rotating obturating disks are synchronously operated by a motor, substantially as described.

2. An X-ray apparatus for producing stereoscopic shadows of the object under examination directly upon a fluorescent screen wherein two rotating obturating disks are synchronously operated by a motor through flexible shafts, substantially as described.

3. An X-ray apparatus for producing stereoscopic shadows of the object under examination directly upon a fluorescent screen, comprising in combination two rotating obturating disks disposed between the tube or bulb and the screen and between the screen and the observation point respectively and operated by an electro-motor synchronously with each other, substantially as described.

4. An X-ray apparatus for producing stereoscopic shadows of the object under examination directly upon a fluorescent screen, comprising in combination a single X-ray tube or bulb having two cathodes and two anti-cathodes connected in parallel across a transformer, a fluorescent screen, two rotating obturating disks disposed between the tube or bulb and the screen and between the screen and the observation point respectively and operated by an electro-motor synchronously with each other, substantially as described.

5. An X-ray apparatus for producing stereoscopic shadows of the object under examination directly upon a fluorescent screen, comprising in combination a single X-ray tube or bulb having two cathodes and two anti-cathodes connected in parallel across a transformer, a fluorescent screen, two rotating obturating disks disposed between the tube or bulb and the screen and between the screen and the observation point respectively and operated by an electromotor synchronously with each other and with the interrupters of the primary circuit of the transformer in such manner that alternately with each operation there is an issue of current into the X-ray tube, substantially as described.

MATIAS BALSERA RODRIGUEZ.