(12) PATENT **(11)** Application No. **AU 199672935 B2**
(19) AUSTRALIAN PATENT OFFICE **(10)** Patent No. **717798**

(54) Title
A gas appliance for heating fluids

(51)[7] International Patent Classification(s)
F23C 005/00 **F23D 014/82**
F23D 014/58 **F24H 009/18**

(21) Application No: **199672935** (22) Application Date: **1996.10.16**

(87) WIPO No: **WO97/14916**

(30) Priority Data

(31) Number	(32) Date	(33) Country
MI95A2134	**1995.10.17**	**IT**

(43) Publication Date : **1997.05.07**
(43) Publication Journal Date : **1997.07.03**
(44) Accepted Journal Date : **2000.03.30**

(71) Applicant(s)
Worgas Bruciatori S.R.L.

(72) Inventor(s)
Enrico Sebastiani

(74) Agent/Attorney
PHILLIPS ORMONDE and FITZPATRICK,367 Collins Street,MELBOURNE VIC 3000

(56) Related Art
US 5355841
CA 2130964
US 4510890

OPI DATE 07/05/97 APPLN. ID 72935/96
AOJP DATE 03/07/97 PCT NUMBER PCT/EP96/04488

AU9672935

IN

(51) International Patent Classification ° :
F23C 5/00, F23D 14/82, 14/58, F24H 9/18

A1

(11) International Publication Number: WO 97/14916

(43) International Publication Date: 24 April 1997 (24.04.97)

(21) International Application Number: PCT/EP96/04488

(22) International Filing Date: 16 October 1996 (16.10.96)

(30) Priority Data:
MI95A002134 17 October 1995 (17.10.95) IT

~~(71)~~(72) ~~Applicant and~~ Inventor: SEBASTIANI, Enrico [IT/IT]; Via S. Banfi, 13, I-20025 Legnano (IT).

(74) Agents: MAGGIONI, Claudio et al.; Jacobacci & Perani, Via Visconti di Modrone, 7, I-20122 Milano (IT).

(71) WORGAS BRUCIATORI S.R.L.
Via A. Coppi 17
Formigine (Modena)
Italy

see folio 5

(81) Designated States: AU, BR, CA, MX, RU, European patent (AT, BE, CH, DE, DK, ES, FI, FR, GB, GR, IE, IT, LU, MC, NL, PT, SE).

Published
With international search report.
Before the expiration of the time limit for amending the claims and to be republished in the event of the receipt of amendments.

AUSTRALIAN PATENT OFFICE 92B15 30/4/98

(54) Title: A GAS APPLIANCE FOR HEATING FLUIDS

(57) Abstract

The invention relates to an appliance for heating fluids which includes a combustion chamber (20) in which the head (21c) of the burner with flame openings (39) is juxtaposed with a wall (21a, 21b) which separates the chamber from the lower portion of the appliance; in the event of flammable substances bieng present in the environment surrounding the appliance, these can enter the combustion chamber only through the flame openings (39) and similar slots (50) formed in the wall (21a, 21b). This enables the burner flames and/or the ignition element (25) to ignite these substances as soon as they enter the chamber (20), the flames being detached from said wall, thus preventing the formation of unwanted explosive or flammable mixtures in the chamber (20) and any flash back, thereby contributing to the safety of the appliance.

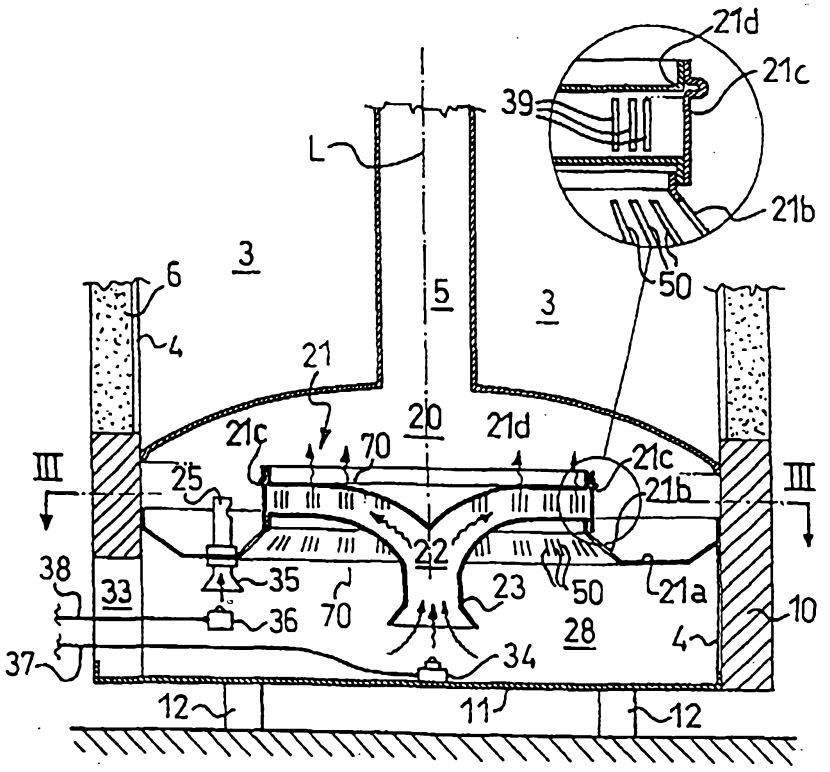

A GAS APPLIANCE FOR HEATING FLUIDS

The present invention relates to a gas fired appliance for providing substantially convective heat transfer to a fluid, operating with at least one atmospheric premixed burner arranged to operate under natural draft; said burner includes fuel supply means for providing a mixture of gaseous fuel and air to a plenum chamber having a burner head with a plurality of flame openings, ignition means for igniting the air-fuel mixture and a combustion chamber with a surface which includes the burner head and a discharge duct in fluid communication with the environment and in heat exchange relationship with said fluid.

Fluid-heating appliances of the above structural configuration are well known and of common domestic use. They include appliances intended for heating water exclusively for sanitary use (also commonly called boilers or water heaters), appliances for producing hot water for sanitary use and for heating rooms (so-called combination boilers) and also heaters for generating hot air (known as "furnaces").

In order to satisfy constant consumer's demand for maximum safety when using the appliances considered here, great attention is currently being given to improving safety in cases wherein the environment

CONFIRMATION COPY

surrounding the appliance contains volatile flammable substances. This occurs fairly frequently in some countries, including the United States, where in many houses fluid heating appliances are installed in basements, garages or other areas which also serve to store fuel or any other flammable substances: should any such flammable substance be spilt for any reason, its vapours would surround the heating appliance, creating a fire risk.

In fact, such vapours produce with air an explosive or a highly flammable mixture which, reaching the combustion chamber, could be ignited by the flame of the pilot burner or by the flames of the main burner when this is lit; the damaging consequences of an explosion are easily imaginable. Should the flammable mixture in the combustion chamber be ignited, the flame would spread to the spilt flammable liquid and to the containers thereof, threatening to set fire to the house.

It should also be pointed out that the risk of flammable vapours being introduced into the combustion chamber is greater in the case of fluid-heating appliances with a storage tank. In this case, the hot water held in the tank of such an appliance exchanges heat with the air in the exhaust duct and may heat it

so as to create a "chimney effect" in the duct even when the burner is off. As a result of this, flammable vapours in the environment surrounding the appliance would be sucked into the combustion chamber with all the unfortunate consequences described above.

Several models of heating apparatus sought to satisfy the aforesaid demand for greater safety and to avoid the risks just described are known ; these include appliances which prevent fluid from being exchanged with the surrounding environment; air is drawn in, and exhausts are let out, through pipes passing in the walls of the room and communicating with the outside. The main disadvantage of these arrangements is that they require structural modifications to the gas appliances which significantly increase costs. The appliance must be air-tight and, in order to let out exhausts and drawing in air, a fan or blower must be generally installed.

U.S. Pat. No. 5,317,992 discloses a gas heater in which combustion occurs at or near a combustion surface maintained at subatmospheric pressure, using a surface burner acting in a sealed combustion chamber under natural draft. This heater doesn't solve the problem of ignition of flammable vapours; when the main burner is on, the combustion surface in contact with the flame

reaches high temperatures enough to ignite the fuel-air-flammable vapours mixtures at the external side of said combustion surface and the flame would spread to the spilt flammable liquid and to the containers thereof, threatening to set fire to the house. Moreover, the combustion surface, so wide as to keep the combustion loading in the range from about 500 to about 2000 MJoules/m^2 hr and made of wire, preferably inconel 601, or ceramics to resist high temperatures, is extremely expensive compared to aluminized-steel sheet utilized for usual water heater burners.

The object of the invention is to provide a gas appliance for heating fluids which is safe even when used in an environment containing volatile combustible substances, while avoiding the disadvantages of prior art appliances and at the same time obtaining reduced emissions of oxides of nitrogen (NOX), and carbon monoxide (CO).

This object is achieved according to the invention in that the gas appliance as defined above further comprises a wall connected to the plenum chamber and arranged to separate the combustion chamber from the environment so as to limit fluid communication therebetween to the flame openings and to additional openings, if any, provided in said wall and in that the

ratio between the overall area of the openings and the burner energy input is comprised between 200 and 500 mm^2/kw, the ratio width/depth of each opening is selected to avoid flash back and the openings are arranged so close to one another as to assure cross ignition.

If no additional openings are provided, the amount of primary air is great enough to form a hyperstoichiometric air-fuel mixture, i.e. a mixture in which primay air exceeds the amount needed to provide complete combustion of the fuel.

If additional openings are provided, the amount of primary air is lower that the amount required for complete combustion and secondary air is induced to enter the combustion chamber through said additional openings. These additional openings have also the function of causing any flammable vapour from the environement to enter the combustion chamber for being ignited, as better explained further on.

The discharge duct in fluid communication with the environment is arranged to produce a substantially atmospheric to a subatmospheric pressure in the combustion chamber depending on the specific embodiment and operating conditions. This effect is due to the flow from the combustion chamber to the environment of

products of combustion when the burner is on, or of hot air between heating cycles.

The subatmospheric pressure, if any, co-operates with the plenum pressure in the mixing chamber of the burner to cause air/gas, or air/gas/vapours mixture and also secondary air, or secondary air/vapours if additional openings are provided to flow through the fame openings into the combustion chamber.

Preferably, the flame openings, plus the additional openings when provided, have such an overall area to obtain an average transit speed, of air or mixtures, above 0.5 m/sec.

Any mixture, air-fuel, air-fuel-flammable vapours, air-flammable vapours entering the combustion chamber, are immediately ignited by at least one ignition element and, because of the exit velocity, the flames are detached from the surface of the burner head or the separating wall, so that the temperature of the burner head and the wall never reaches a value to ignite any mixture on the other side.

In case of fully premixed burner i.e. burner with a combustion chamber substantially sealed from the environment, the flames will lift without specific flame-holding methods due to the high velocity of the mixture flowing from the flame openings and to the low

combustion velocity. To prevent instability of the flame different methods are used in the embodiments described hereafter.

In order to better understand the invention, its characteristics and advantages, a few embodiments thereof are described below, by way of non limitative examples in connection with the appended drawings, in which

Figure 1 is a longitudinal section of a gas appliance for heating fluids according to the invention;

Figure 2 is an enlargement of a detail of Figure 1;

Figure 3 is a sectioned view of the appliance of Figures 1 and 2, taken along line III-III of Figure 2 with a portion enlarged;

Figure 4 is a longitudinal section of a variant of the appliance of the invention;

Figure 5 is an enlargement of a detail of Figure 4;

Figure 6 is a section of the appliance of Figures 4 and 5, taken along line VI-VI of Figure 5;

Figure 7 is a longitudinal section of a further variant of the appliance of the invention; and

Figure 8 is an enlargement of a detail of Figure

7 with a portion further enlarged;

Figure 9 is an enlarged section of the appliance of Figures 7 and 8, taken along line IX-IX of Figure 7;

Figure 10 is an enlarged section of the appliance of Figures 7 and 8, taken along line X-X of Figure 7.

With reference to the drawings listed above, a gas appliance for heating fluids according to the invention is generally indicated 1.

The gas appliance 1 is of a free-standing type, that is it can rest on the floor or on another surface, is elliptical around an axis L and includes a hot water storage tank 3 which surrounds an exhaust duct 5 and exchanges heat therewith. In this example, and in the variants offered later in this description, the appliance of the invention is intended for heating water; however, as made clear in the foregoing, it may also be used for heating air, only with a different dimensioning of the surface which transfers heat to said air. The tank 3 has a side shell 4 which is thermally insulated by a layer 6, constituted in this embodiment by insulating foam, and covered by an outer sheet not shown in the drawings. A baffle 8 is arranged in the duct 5 for agitating exhausts rising through the duct 5 and enhancing the exchange of heat between the exhausts and the fluid in the tank 3.

The appliance 1 has a fibre-glass lid 9. A lower portion 10 of the insulating shell is also made of fibre-glass. At the bottom of the appliance, the shell is sealed to a base 11 so as to be air-tight. The base 11 has a series of feet 12 on which the appliance rests on the floor.

The bottom portion of the tank 3, from which the duct 5 extends, is domed and defines the ceiling of a combustion chamber 20 having the shape of a substantially spherical cap. This chamber is closed at its bottom, that is opposite the spherical cap, by a separation wall 21 having a composite profile (see Figure 2) formed by sections, for example of sheet metal, with different functions which will now be described in detail.

The wall 21, which is elliptical in this case, includes an annular portion 21a which extends radially from the shell 4 towards the axis L of the appliance and is joined to a frustoconical portion 21b, surmounted in turn by an elliptical portion 21c. An upper disc portion 21d closes the central portion of the wall 21. In this embodiment, the portions 21a and 21b of the wall 21 are formed in one piece, while the portions 21c and 21d are fitted to form the composite structure of the wall 21. All junctions between the

various portions of the wall 21 are air-tight. The portion 21c of the wall has a plurality of elongate, slot-like openings, or flame openings 39 for letting the gas-air mixture into the combustion chamber to be ignited by an ignition element 25. More specifically, the flame openings 39 are arranged in groups, like a crown, around the periphery of the elliptical portion 21c, with the portion 21c itself constituting the head of a plenum chamber of a burner 22 into which the aforesaid gas-air mixture is fed through an induction duct 23, which can also be made of metal sheet. In this embodiment and in the variants described in the following only one main burner is used. However, the invention applies also to gas appliances having more than one main burner. The frustoconical portion 21b of the wall 21 has a group of additional openings or slots 50 having substantially the same shape and dimension as the flame openings 39.

In the appliance of the invention, a cavity 28 is defined beneath the wall 21 which is in fluid communication with the external environment through an opening 33 in the lower portion 10 of the shell 4.

The cavity 28 contains the end portions of two ducts 37 and 38 which deliver gas to nozzles 34 and 36 for ejecting gas to the burner 22 and to the ignition

element 25, which in this case is a pilot burner. To this end, the latter also has an induction duct 35, which is functionally equivalent to the induction duct 23 of the burner 22, is sealed to the portions 21a of the wall 21 and has a flame opening, not illustrated, dimensionally similar to each of the flame openings 39. A thermocouple for the flame control is provided, but not illustrated.

A gas control unit 40 includes a valve effective on both ducts 37 and 38 to regulate the flow of gas through them and is connected to a thermometer 41 for measuring the temperature of the water in the tank 3.

In a preferred embodiment of the invention, in a wall 21 of a sheet metal having a thickness of between 0.4 and 0.6 mm, the maximum width of the slots 50 and the flame openings 39 ranges between 0.4 and 0.5 mm and their spacing, that is the distance between the centres of two adjacent slots or openings of a same group, is between 1 and 1,5 mm; in addition, the distance between adjacent groups of slots 50 or openings 39 must be a maximum of around 15-20 mm for reasons which will be explained better later, in the description of the operation of the appliance.

In another embodiment the flame openings and/or the additional openings are circular holes having a

diameter comprised between 0.4 and 0.9 mm. In either embodiments the depth of the openings is the same as the thickness of the wall 21.

If the wall 21 is made of sheet metal portions, the flame openings 39 and the additional openings 50 can be formed as substantially parallel slots with bended lips with a width/depth ratio comprised between 1/5 and 1/10, depending on the tickness and thermal conductivity of the metal sheet. In this case, the centre distance between two adjacent flame openings 39 or two adjacent additional openings 50 does not exceed 6.0 mm and the distance between two flame openings 39 or two additional openings 50, as measured along the longitudinal direction of the openings, is less then 20.0 mm.

It should finally be noted that, since the values given above may vary, depending on the construction of the appliance (shape, dimensions, etc.) it may be stated in general that the ratio between the overall area of the flame openings 39 and the slots 50 and the burner energy input must be between 200 and 500 mm^2/kW to obtain an average transit speed, of air or mixtures, above 0.5 m/sec.

In so far as the heating of the fluid is concerned, operation of this embodiment and of the

variants which follow will be explained later but only briefly since it is substantially the same as for conventional appliances, greater attention will be paid, however, to features relating to the safety of the appliance in the event of volatile flammable substances being present in the surrounding environment.

The gas ejected from the nozzle 34 entrains air, the so-colled primary air, and forms a gas-air mixture in the plenum chamber of the burner 22 as a result of the Venturi effect generated by the induction duct 23. The gas-air mixture flows out through the openings 39 and is ignited by contact with the flame from the ignition element 25, that is the flame of the pilot burner. The burner flames heat the water in the tank 3. As already stated, the gas flow is regulated by the gas control unit 40 in a known manner. This is all it needs to be explained here on the way the appliance heats the water; it should simply be added that this embodiment of the invention is an appliance with an atmospheric burner of a partial premixed type, that is in which the flame in the combustion chamber 20 burns both the aforesaid gas-primary air mixture generated by the Venturi effect and combustion air, the so-colled secondary air, drawn into the combustion chamber 20

through the aperture 33 and the slots 50 as a result of the subatmospheric pressure produced in the combustion chamber 20 by the buoyancy of exhausts or air, heated by the hot water contained in the tank 3, flowing through the duct 5.

As far as the safety of the appliance is concerned in the event of volatile flammable substances filling its surrounding environment, two different cases might occur: the first occurring when the main burner 22 is on, the second when only the pilot burner 25 is on.

In the first case, the volatile flammable substances are drawn into the cavity 28 from outside the appliance as a result of the chimney effect created by the main burner; a portion of these substances joins the gas ejected from the nozzle 34 and passes through the openings 39 into the combustion chamber where it is burnt as explained above: in this case the combustion which occurs is not ideal for the burner as the volatile substances will have altered the optimal gas-air mixture; however it will not affect the overall operation of the appliance.

In addition, a second portion of the volatile substances in the environment surrounding the appliance will be drawn into the chamber 20 through the slots 50 and will also be ignited by the flames burning above

the openings 39 and at the pilot burner, because of the reciprocal position of openings 39 and slots 50. In addition to these two portions of volatile substances drawn inside the appliance, a third portion is drawn into the combustion chamber 20 by the pilot burner which is always burning and whose operation is the same as that of the main burner.

The appliance of the invention is therefore clearly in conditions of maximum safety when the main burner is activated and carrying out its function of heating the fluid in tank 3.

Turning now to the case in which volatile flammable substances fill the environment surrounding the appliance when the burner is not on and there are no flames at the openings 39, events develop as follows.

Only the flame of the pilot burner 25 is burning in the combustion chamber. There is a natural draft in the combustion chamber and in the exhausts discharge duct 5, due to heat generated by the pilot burner and by the heat exchanged between the water in the tank 3 and the air in the duct 5. The volatile combustible substances, mixed to the air, are therefore drawn into the appliance and into its combustion chamber 20 via the only possible route, that is through the slots 50

and the openings 39 in the annular portion 21a and the elliptical portion 21c, respectively, of the wall 21.

Since in either case, whether passing through the openings 39 or the slots 50 (see the particular relative positions of these parts in Figure 2) at least a fraction of the flow of volatile combustible substances drawn into the appliance will immediately touch the flame of the pilot burner 25, this fraction will be ignited by the pilot burner, thus generating a flame which will spread through the combustion chamber to the groups of openings 39 and slots 50. This result, that is the spread of the flame to all the openings and slots provided according to the invention, is encouraged by the arrangement of the openings in groups spaced around the frustoconical portion 21b and the elliptical portion 21c of the wall 21, and is made particularly effective in this embodiment by the dimensions of the openings as given above.

The role of the additional openings or slots 50 must be emphasised in this context: the dimensions of the slots must be such as to prevent any flashback through the wall 21, which could spread outside the appliance with the unfortunate effects described at the beginning of this description. For this reason the slots 50 have substantially the same dimensions as

those of the flame openings 39 which are designed so as to prevent the flashback phenomenon, since they act as outlets for the flames from the burner. To design openings so as to prevent flashback is well known to technical people skilled in the art. Openings with ratio width/depth, or diameter/depth as cited above meet the requirement for preventing flashback.

An additional factor contributing to the safety of the appliance is represented by the fact that the mixture of air and volatile flammable substances is ignited immediately behind the wall 21: this prevents the formation of dangerous explosive mixtures in the combustion chamber.

The relative position of the flame openings 39 and secondary air, or additional openings 50 is so selected as to achieve two different objectives: first, to bring in contact as soon as possible any flammable mixture with flames of the main burner during on periods; second, to increase the air content of the fuel-primary air mixture before the flame front to reduce the NOX content in the exhausts also for partially premixed burners.

A variant of the embodiment of the invention described above is illustrated in Figures 4, 5 and 6 which show an appliance for heating fluids in which

components which are structurally and functionally the same as those of the previous embodiment retain the same reference numbers.

In this variant of the invention, the atmospheric burner is of a total premixed type, that is of a type where in the combustion chamber 20 only a gas-air mixture is burnt which is produced by a Venturi-type tube 60 contained in a body, or plenum chamber, 61. The tube 60 is the only means of fluid communication between the combustion chamber and the outside environment through flame openings 39 on the body 61 at one side and an aperture 63 in the lower portion 10 of the appliance with its mouth sealed to the shell (see Figure 4)on the other side. With this type of configuration the flames in the combustion chamber 20 burn only the gas-air mixture provided by the Venturi tube 60, without the need for an additional flow of air into the chamber 20 as is required in the previous example. The pilot burner 25 is a copy of the main burner with reduced dimensions and has a group of flame openings identical to the main burner.

In this embodiment of the invention the combustion chamber is substantially sealed with respect to the enviroment outside the appliance and the burner body 61 is formed by a wall 61a, the upper portion of which has

a plurality of openings 39 in adjacent groups arranged substantially as in the previous embodiment as shown in Figure 3 but in a more elongate elliptical ring, and a flange 61b.

The Venturi tube 60 receives gas from a nozzle 34 and a pilot burner 25 is arranged inside the housing 61, along with associated openings 39.

The operation of this variant will also only be considered with regard to the safety of the appliance in the event of the presence of volatile combustible substances in the surrounding environment, since the heating of the water is carried out in almost the same way as described above; it needs only be emphasised that in this variant the gas-air mixture produced in the Venturi tube 60 expands in the housing 61 and flows from there into the combustion chamber 20 through the openings 39 on the upper portion of the wall 61a.

In the event of volatile flammable substances being present in the environment surrounding the appliance, there are two possibilities in this case as well: the first occurs while water is being heated in the tank and therefore flames of the main burner are present in the combustion chamber, the second when only the pilot burner 25 is lit.

In the first case, the volatile substances merge

with the gas ejected from the nozzle 34 and pass through the Venturi tube 60 to the housing 61 and thence to the combustion chamber 20 through the groups of openings 39 which act as the head of the burner. The mixture of gas, air and volatile flammable substances is burnt to heat the water in the tank and, although this combustion is not ideal, for the reasons already explained above, the operation of the appliance is not significantly affected.

Should volatile flammable substances be present, on the other hand, when the nozzle 34 is not delivering gas to the Venturi tube 60 and there are thus no flames in the combustion chamber but only the pilot burner 25 is lit, the substances are drawn into the combustion chamber by the "chimney effect" in the manner and for the same reasons explained above: they therefore enter the Venturi tube 60, the housing 61 and thence the combustion chamber through the slots 39; at least a fraction of these substances will come into contact with the flame of the pilot burner and will be ignited in this case as well. The resulting flame will spread to all the groups of openings 39 arranged in a ring as described for the previous example, thus eliminating the flammable substances.

In this second embodiment the dimensions of the

openings are again designed to prevent flashback into the housing 61, both because they act as the head of the burner and in order to prevent the flame spreading to the flammable substances outside the appliance.

The same numerical values as discussed in the previous example are relevant in this case too for the structure of the housing 61 and more particularly for the thickness of the wall 61a as well as the width of the openings 39 and the distances between adjacent groups of these.

The flame openings have such on overall area to obtain an average transit speed, of air or mixtures, above 0.5 m/sec. To prevent instability of the flame, in this embodiment the method following the U.S. Pat. no. 5,385,467, of the same inventor is used. This method comprises the steps of discharging the mixture from a pierced surface of substantially doughnut geometry comprising a slotted peripheral area and an essentially solid central area, bringing combustion to completion in a slender lamellar flame detached from the head of the burner, so that the temperature of the wall never reaches the value necessary to ignite any mixture on the other side.

Any mixture, air-fuel, air-fuel-flammable vapours, air-flammable vapours exiting in the combustion

chamber, are immediately ignited by a pilot burner. To obtain this immediate ignition the distance of the group of flame openings 39 farthest from the pilot burner 25 in this embodiment doesn't exceed 250 mm.

Finally, in addition to the two embodiments of the invention described so far, a third variant is described hereafter which combines some of the structural details and operating principles of the previous two; in this case again, as shown in Figures 7 to 10, any components which are structurally or functionally the same as those of these first two embodiments are allocated the same reference numbers.

This third variant of the invention has a wall 81 with a composite profile similar to that of the wall 21 described above. This wall again includes an annular portion 81a which extends in a radial way from the lower portion 10 of the appliance and is connected to a frustoconical portion 81b which is surmounted in turn by an elliptical portion 81c; this portion is closed by an upper disc portion 81d. The portions 81c and 81d are connected to one another at a few connection points 82 along their peripheral edges. The connection points 82 are made of short pins which keep said peripheral edges spaced a distance of about 7 mm and support an intermediate metal ring 81c which is about 3 mm thick,

so as to form two ring-shaped flame openings with a width of about 2 mm and a depth of about 15 mm. The connection between the portion 81b and elliptical portion 81c is gas-tight and the annular portion 81a of the wall 81 has no openings or slots. Therefore the combustion chamber 20 is in fluid communication with a cavity 88 formed between the wall 81 and the base 11 of the appliance only through the above-mentioned ring-shaped openings.

In this case therefore the appliance operates as a "fully-premixed" type burner in which the flames in the combustion chamber burn a gas-air mixture produced by the Venturi effect in the tube 60, in a manner entirely similar to that seen for the second embodiment of the invention. In this case the ignition element 25 is an electrode with two functions at the same time: spark ignition electrode and electrode to detect the ionisation current for flame control. In this context it must be noted that the combustion air which is mixed in the Venturi tube 60 is drawn in through an air duct 89 which extends along a generatrix of the appliance of the invention, incorporated in the insulating layer 6 thereof. The duct 89 extends from an inlet 87 adjacent to the lid 9 of the appliance to the inlet of the Venturi tube 60. The nozzle 34 is arranged inside this

duct, frontally to the Venturi tube 60.

In this embodiment when the burner goes out, the air, which is heated in the same way in the duct 5 and in the duct 89 because of the contact with the hot water tank wall, rapidly reaches the same temperature in both ducts. Therefore, the buoyancy into the two sides of the U-shaped duct 89+60+88+20+5 is balanced and any air flow therethrough is stopped. Any intake of flammable vapours into the combustion chamber between heating periods and any resulting fire risk are prevented.

During the heating periods first of all a spark between the electrode 90 and the lips of the ring-shaped flame openings between portions 81c and 81d ignite the mixture exiting from the same openings with or without flammable substances, then the flames remain under ionisation current control carried out by the same electrode 90 which is in electrical contact through an insulated cable 91 with a gas control unit 40'. The control unit 40' incorporates a control valve similar to the control valve of the previous embodiments and a battery driven electronic ignition and flame control.

To reduce the flow resistance of air, air- gas mixtures and exhausts, in this embodiment a new design

of the exhaust duct 5 and of the baffle 8 is provided which, without changing the diameter of the exhaust pipe connection, improves also the recovery efficiency of the appliance where the reduction to a minimum of the standby losses is assured by the U formed duct 89+60+88+20+5. Of course a similar arrangement of exhanst duct and baffle can be used advantageously in the other embodiments described above.

The exhaust duct 5 is made up of a top portion with reduced section and a bottom portion with increased section. The two portions are connected by a frustoconical portion with four tapered grooves. The bottom portion has a side wall with four longitudinal grooves. The total surface of the duct is almost the same as that of a pipe of the same length and with the same diameter as the bottom portion of said duct 5.

Inside and concentrically with the duct 5 is placed a formed pipe baffle 8 which has a bottom cylindrical portion, a top portion with cross formed section completely closed on the summit, an intermediate portion with four tapered grooves corresponding to the similar grooves on the duct 5, perforated with holes or slots 95 to permit the flow of exhausts exiting from inside the pipe baffle 8 to the duct 5.

The very hot exhausts exiting the combustion chamber flow inside the duct 5, then are divided in two branches. A first branch enters the pipe baffle 8 and exchanges heat with the internal surface of the pipe 8. The pipe 8 becomes very hot and radiates strongly to the surface of the duct 5, which is at a low temperature because of the contact with the water. The second branch flows between the pipe 8 and the duct 5 and becomes rapidly cold because of the high heat exchange with the cold surface of the duct 5 and of the high speed. At about two third of the duct 5 height the two branches rejoin and create turbulent flow which improves the heat exchange of the top portion of the duct 5.

The above-described arrangement of the exhaust duct provides a higher heat exchange efficiency substantially without reducing the capacity of the water tank. This is due to the shape of the duct 5 which has a surface up to 50% larger than that of a cylindrical duct having a diameter equal to the diameter of the top-portion of the duct 5 and the same length.

In addition, with reference to the ignition element, each of the embodiments of the invention could have a plurality of ignition elements: it has been

verified that the spreading of flames to all the openings and/or slots in the appliance, and thus the elimination of volatile substances, is especially effective when the farthest opening or group of openings is no more than 250 mm distant from the ignition element. This means that it is advisable to provide an additional ignition element when the distance exceeds this value. In general, the appliance of the invention proved to be especially effective when the volatile substances were ignited at all the openings 39 and slots 50, if present, in a maximum of 2 seconds.

CLAIMS

1. A gas appliance for providing substantially convective heat transfer to a fluid with at least one atmospheric premixed burner arranged to operate under natural draft, said burner including:

fuel supply means (34) for receiving a flow of gaseous fuel from a source thereof and operating in response to the flow of fuel to aspirate and combine primary air from the environment to form a combustible air-fuel mixture for delivery to a plenum chamber, said plenum chamber having a burner head (21c) with a plurality of flame openings (39),

ignition means (25) associated with the flame openings (39) for igniting the air-fuel mixture to generate flames,

a combustion chamber (20) having a surface which includes the outer surface of said burner head (21c) and being connected to a discharge duct (5) in fluid communication with the environment and in heat exchange relationship with said fluid,

characterised in that

it comprises a wall (21a, 21b) which is connected to said plenum chamber, has a plurality of additional openings (50) and is arranged to separate said combustion chamber from the environment so as to limit

fluid communication therebetween to said flame openings (39) and said additional openings (50),

the ratio between the overall area of the flame and additional openings (39, 50) and the burner energy input is a value comprised between 200 and 500 mm^2/kW,

the ratio width/depth of each of said flame and additional openings (39, 50) is selected to avoid flash back and

the openings (39, 50) are arranged on the burner head (21c) and on the wall (21a, 21b) so close to one another as to assure cross ignition.

2. A gas appliance for providing substantially convective heat transfer to a fluid with at least one atmospheric premixed burner arranged to operate under natural draft, said burner including:

fuel supply means (34) for receiving a flow of gaseous fuel from a source thereof and operating in response to the flow of fuel to aspirate and combine primary air from the environment to form a combustible air-fuel mixture for delivery to a plenum chamber (61), said plenum chamber having a burner head (61a) with a plurality of flame openings (39) arranged so close to one another as to assure cross ignition,

ignition means (25) associated with the flame openings (39) for igniting the air-fuel mixture to generate flames,

a combustion chamber (20) which has a surface which includes the outer surface of said burner head (61a), is connected to a discharge duct (5) in fluid communication with the environment and in heat exchange relationship with said fluid, said combustion chamber being substantially sealed from the environment,

characterized in that

the fuel supply means (34) is arranged to form a hyperstoichiometric combustible air-fuel mixture,

the ratio between the overall area of the flame openings (39) and the burner energy input is a value comprised between 200 and 500 mm^2/kW to obtain flames detached from the outer surface of the burner head, so that said heat transfer is substantially convective and

AUSTRALIAN PATENT OFFICE

the ratio width/depth of each of said openings (39) is a value selected to avoid flash back.

3. The gas appliance according to any of claims 1 and 2, wherein the discharge duct (5) and the number and area of the openings (39, 50) are so selected that the average transit speed of air or air-gas mixture through the openings (39, 50) is higher than 0.5 m/sec.

4. The gas appliance according to claim 1 or 2, wherein the flame openings (39) and/or the additional openings (50) are elongate slots having a width comprised between 0.4 and 0.5 mm and a depth comprised

AUSTRALIAN PATENT OFFICE

between 0.4 and 0.6 mm.

5. The gas appliance according to claims 1 or 2, wherein the flame openings (39) and/or the additional openings (50) are circular holes having a diameter comprised between 0.4 and 0.9 mm and a depth comprised between 0.4 and 0.6 mm.

6. The gas appliance according to claims 1 or 2, wherein the centre distance between two adjacent flame openings (39) and/or the centre distance between two adjacent additional openings (50) is between 1.0 and 1.5 mm.

7. The gas appliance according to claims 1 or 2, wherein the flame and/or the additional openings (39, 50) are arranged in groups spaced no more than 20 mm from each other, the centre distance between two adjacent openings (39, 50) in a group being between 1.0 and 1.5 mm.

8. The gas appliance according to claim 1 or 2, wherein the burner head (21a; 61a) and/or the wall (21a, 21b) is a sheet metal and the flame and/or the additional openings (39, 50) are substantially parallel slots with bended lips having a width/depth ratio comprised between 1/5 and 1/10, depending on the thickness and thermal conductivity of the metal sheet.

9. The gas appliance according to claim 8, wherein

the centre distance between two adjacent flame openings (39) or additional openings (50) does not exceed 6.0 mm.

10. The gas appliance according to any of claims 8 and 9, wherein the distance between two flame openings (39) or two additional openings (50), as measured along the longitudinal direction of the openings is less than 20.0 mm.

11. The gas appliance according to any of the preceding claims, wherein said ignition means (25) comprise a plurality of ignition elements.

12. The gas appliance according to claim 11, wherein at least one ignition element is a pilot burner (25) functionally identical to said at least one atmospheric burner.

13. The gas appliance according to claim 12, wherein the pilot burner (25) is incorporated into said at least one atmospheric burner.

14. The gas appliance according to any of the preceding claims, comprising a tank (3) including said fluid and having a side shell (4) and an air duct (89), said at least one atmospheric premixed burner being arranged under said tank (3) and said primary air being induced to flow through said air duct (89), said air duct (89) extending along the side shell (4) from

an inlet (87) near the top of the tank (3) to the atmospheric premixed burner.

15. The gas appliance according to any of the preceding claims, comprising a tank (3) including said fluid, said at least one atmospheric premixed burner being arranged under said tank (3), wherein said discharge duct (5) has a top portion with reduced section, a bottom portion with increased section and a frustoconical portion connecting the top and the bottom portion to one another, said bottom portion and said frustoconical portion having grooved walls so that the total surface of the discharge duct is substantially the same as the surface of a pipe having the same length as the discharge duct (5) and the same section as the section of said bottom portion,

said discharge duct (5) comprising a formed pipe baffle (8) which is arranged inside of and concentrically with the discharge duct (5), is closed at its top end and is provided with perforations (95).

16. The gas appliance according to any of the preceding claims, comprising a gas control unit (40, 40') which includes an electronic ignition and flame control device, said ignition means comprising an electrode (25) to detect the ionization current for flame control.

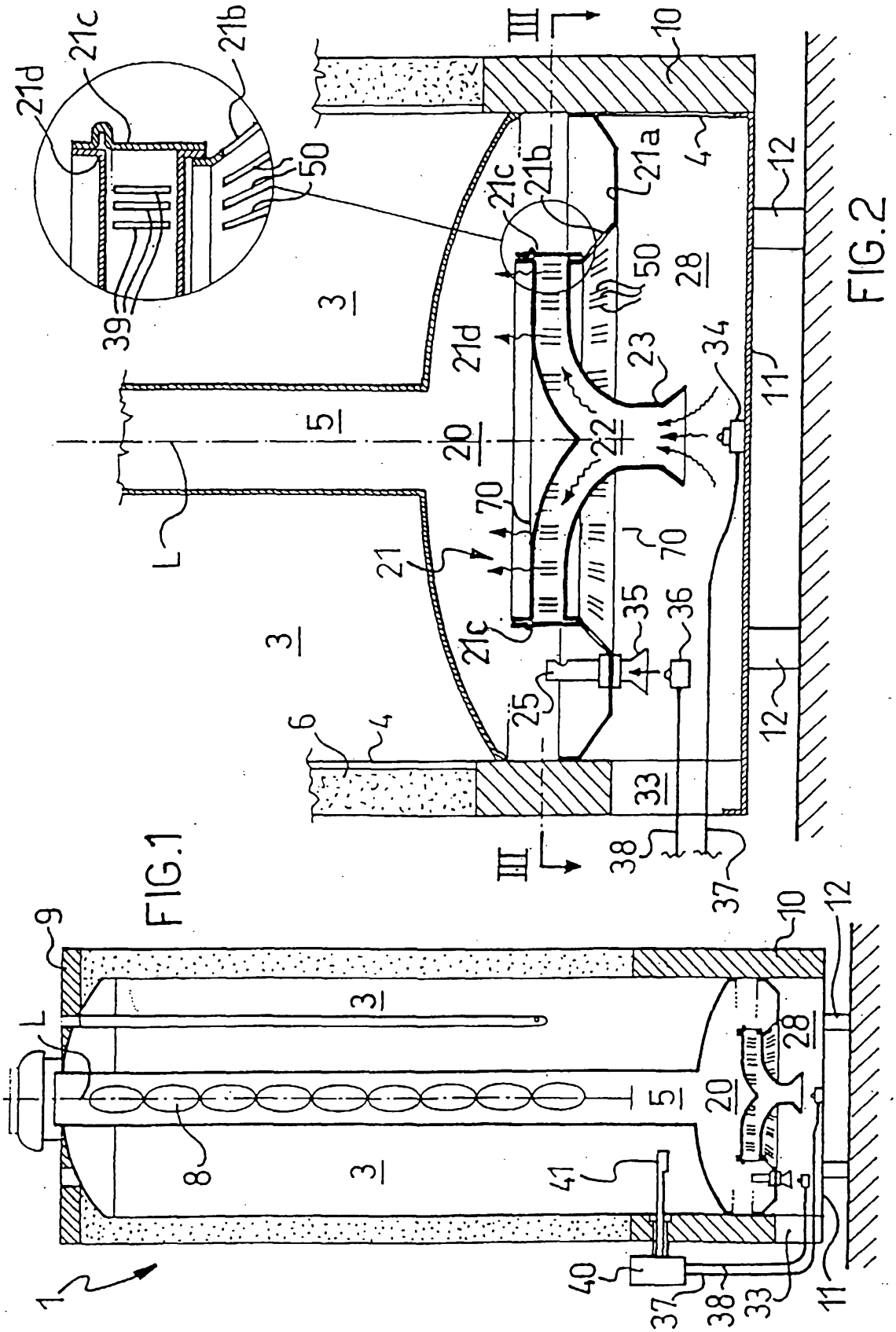
21d
21c
21b
50
39
3
5
L
20
21
70
22
23
34
35
36
25
6
4
33
38
37
10
12
11
28
21a
III

FIG.2

FIG.1

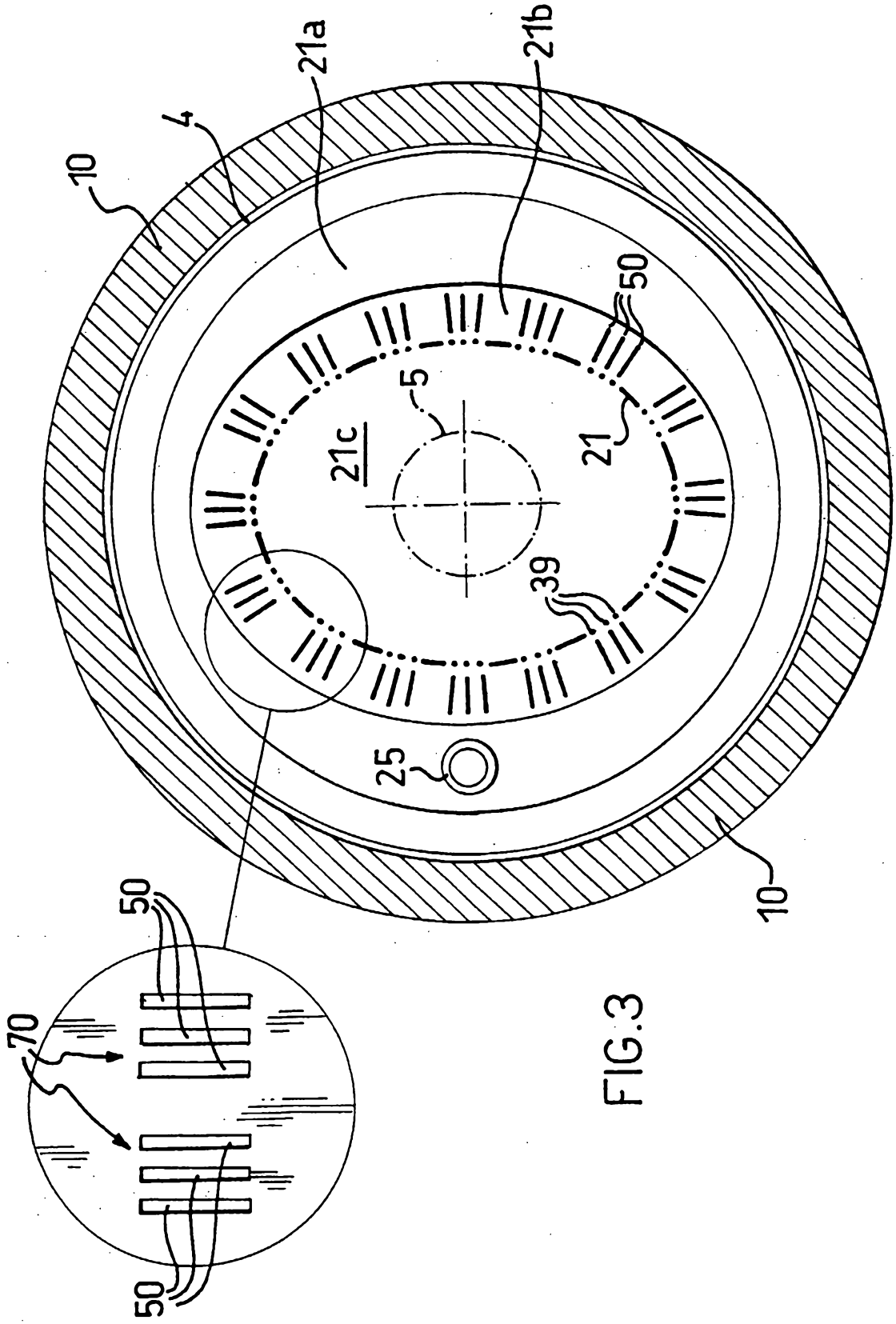

FIG.3

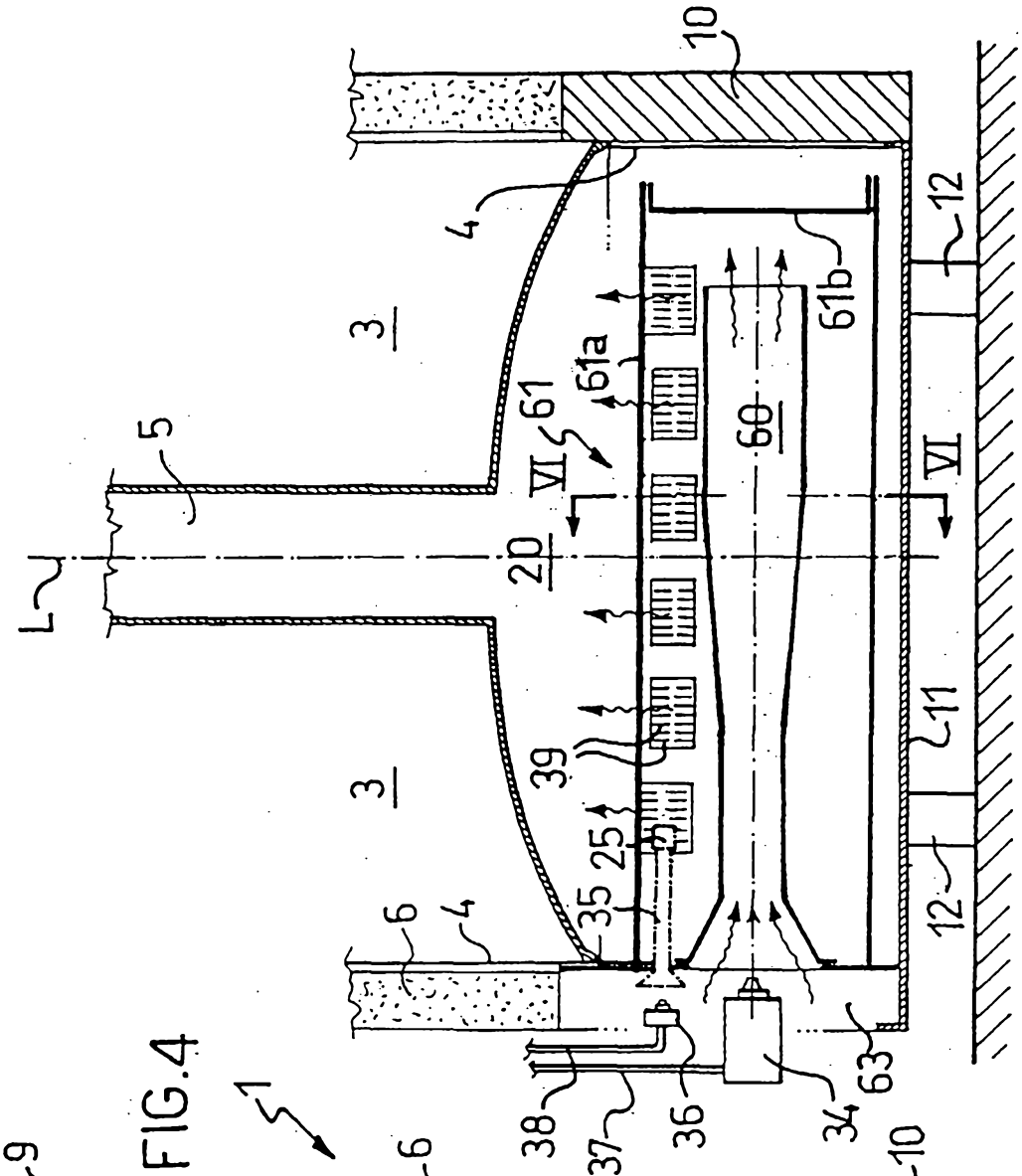
10
4
3
5
L
20
VI
61
61a
61b
60
12
11
39
25
35
6
38
37
36
34
63

FIG.5

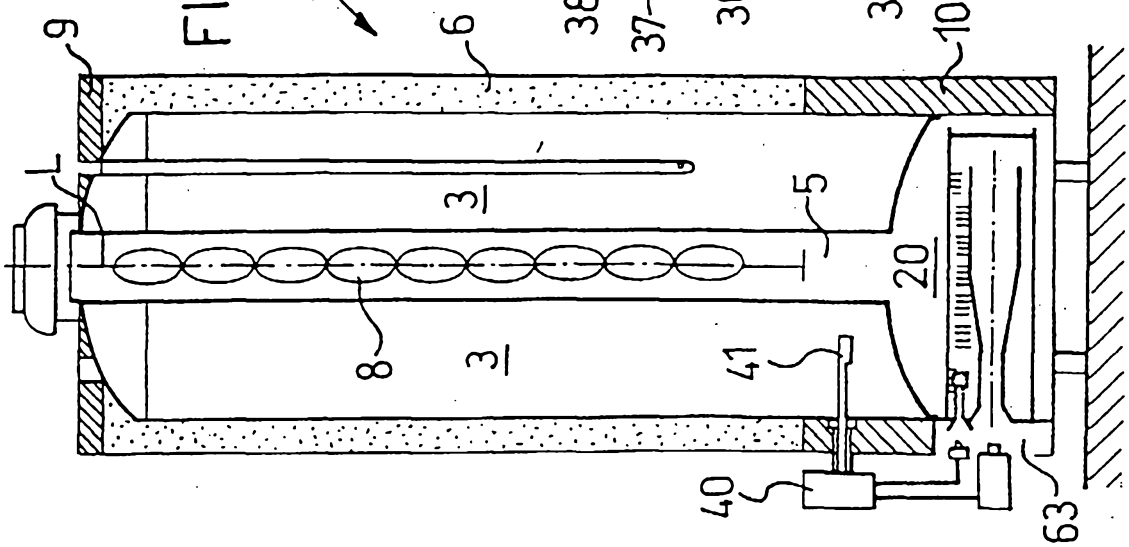
1
9
6
10
L
3
5
20
8
41
40
63

FIG.4

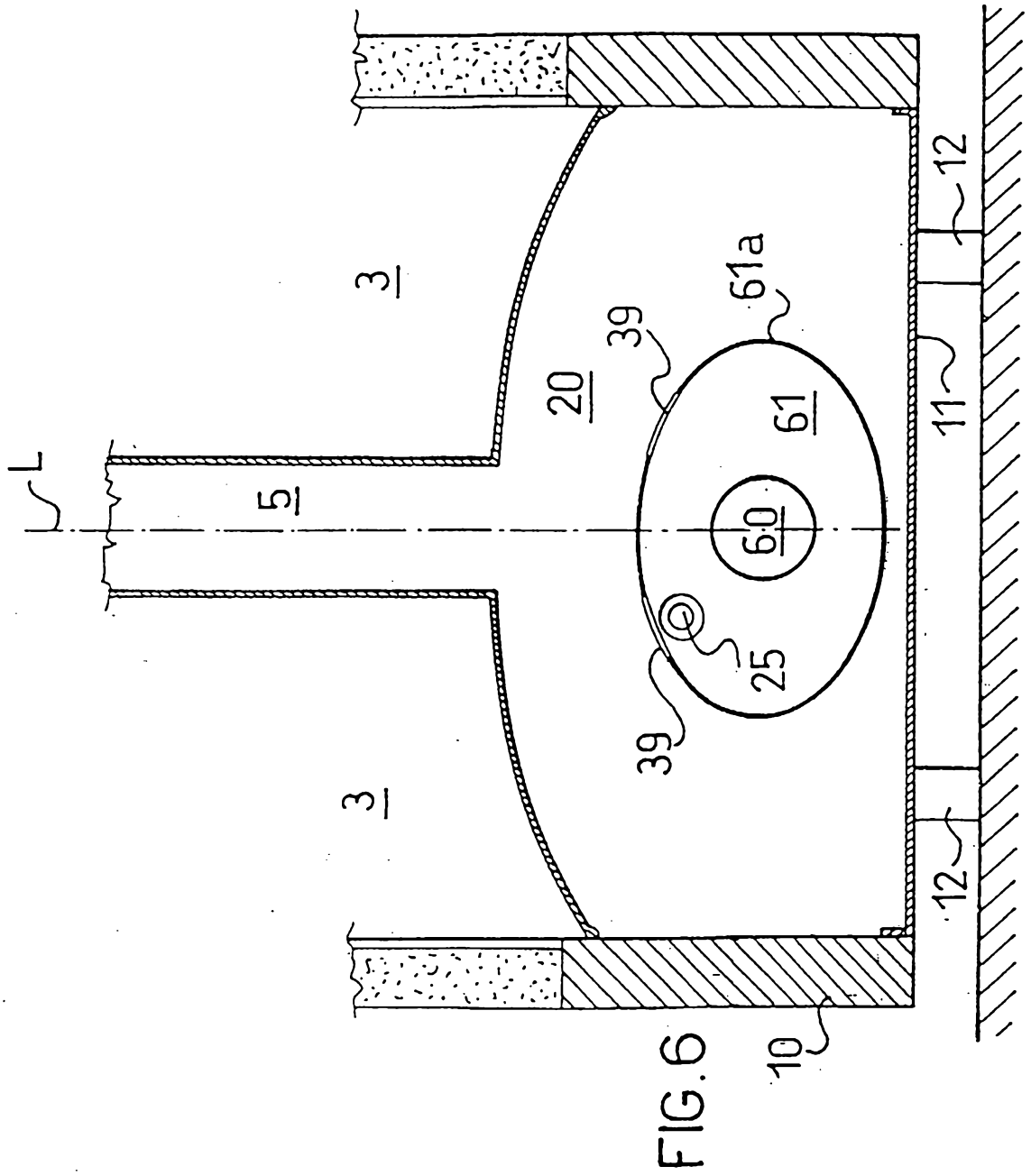

FIG.6

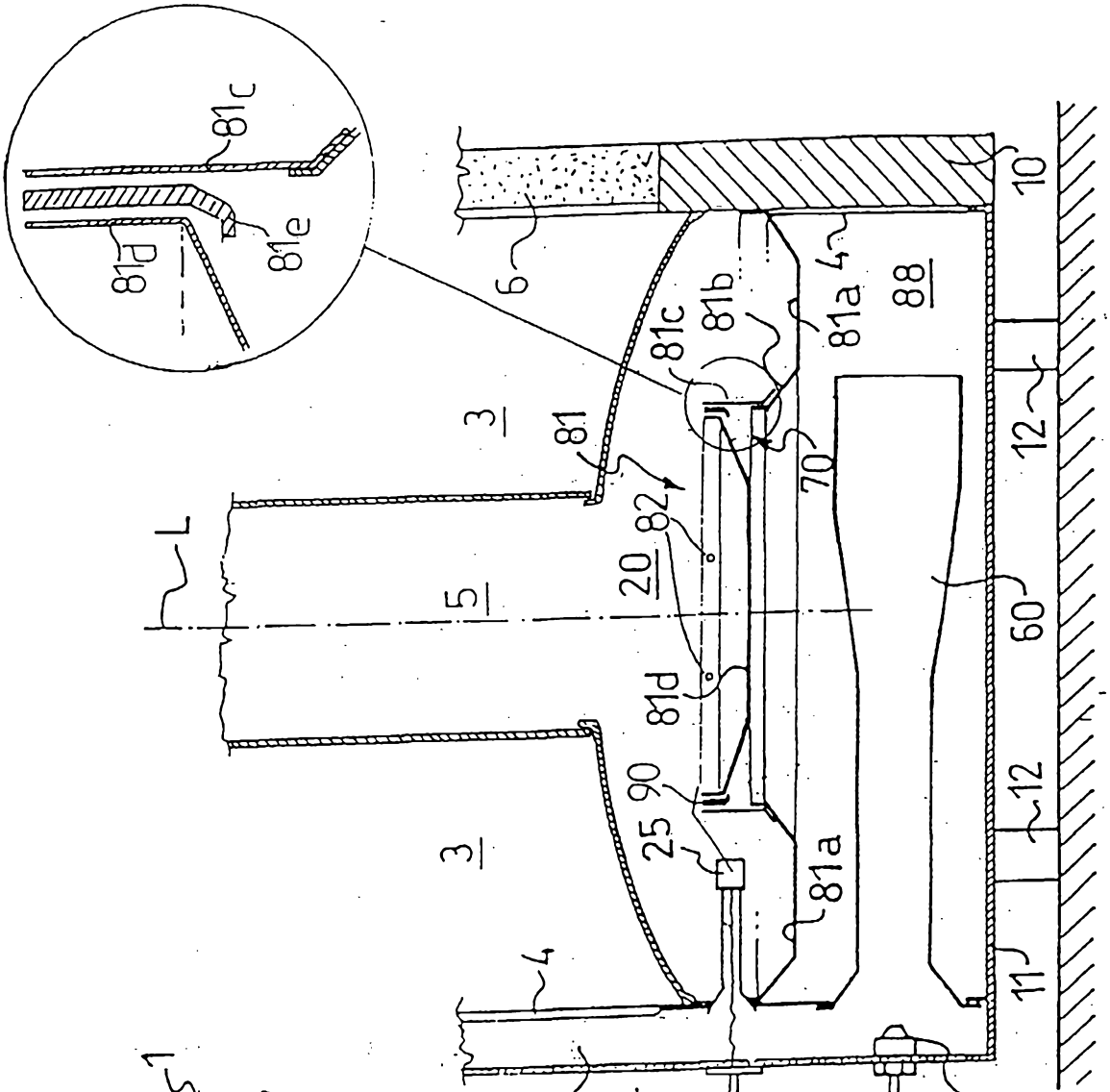
81c
81d
81e
6
10
4
88
81a
81b
81c
3
81
70
12
L
82
20
5
60
81d
90
25
81a
12
3
4
11
89
91
37
34

FIG.8

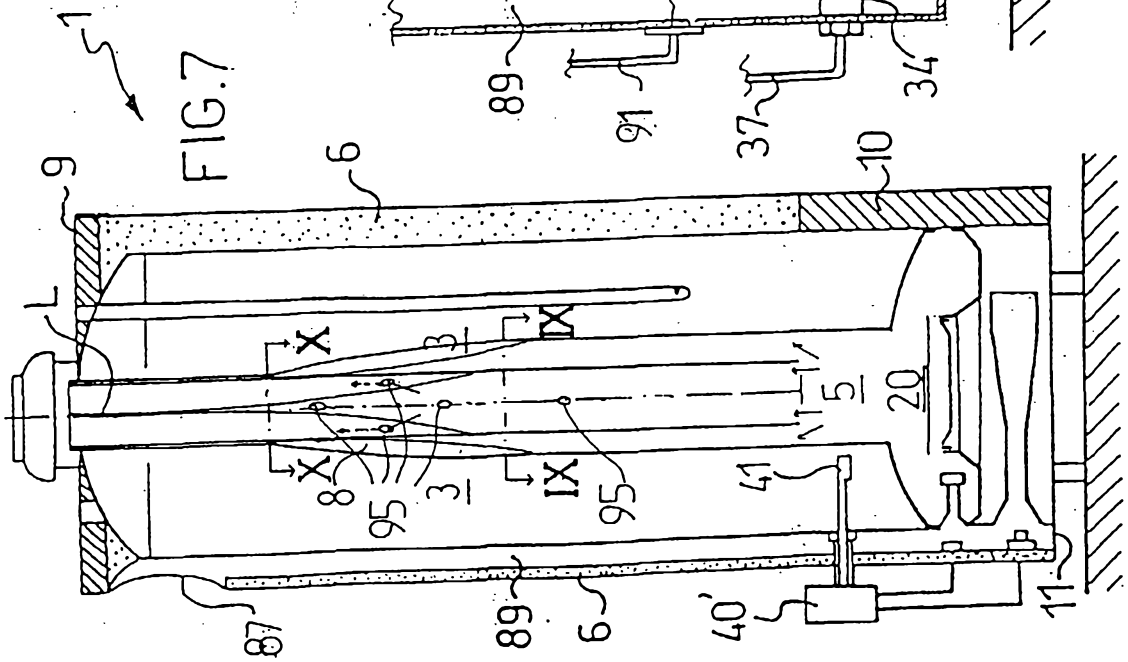
1
9
6
10
L
X
3
IX
5
20
X
8
95
3
IX
95
41
87
89
6
40'
11

FIG.7

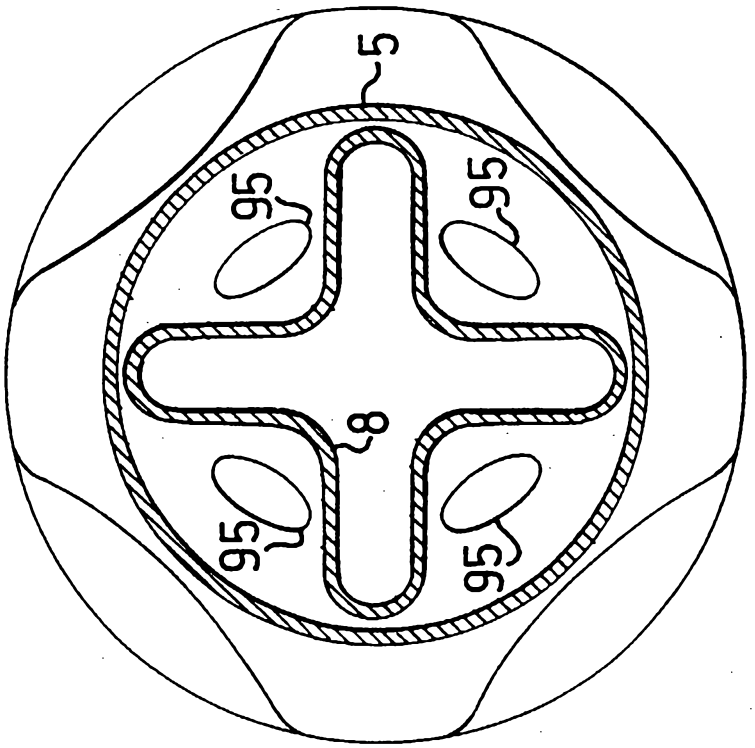

FIG.10

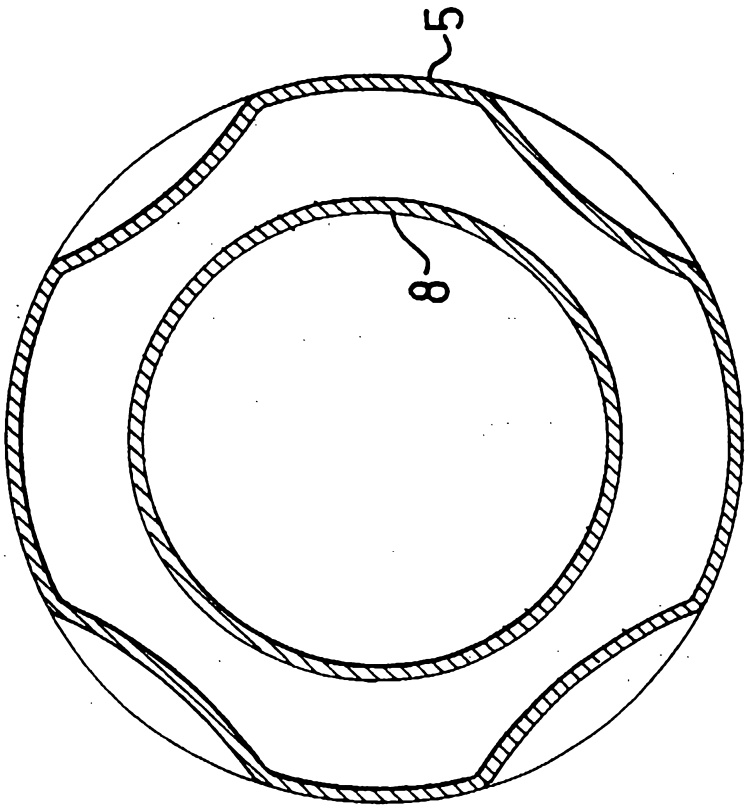

FIG.9