(No Model.)

E. P. CHALFANT.

SEAT CLAMP FOR BICYCLES.

No. 590,256. Patented Sept. 21, 1897.

Fig. 1.

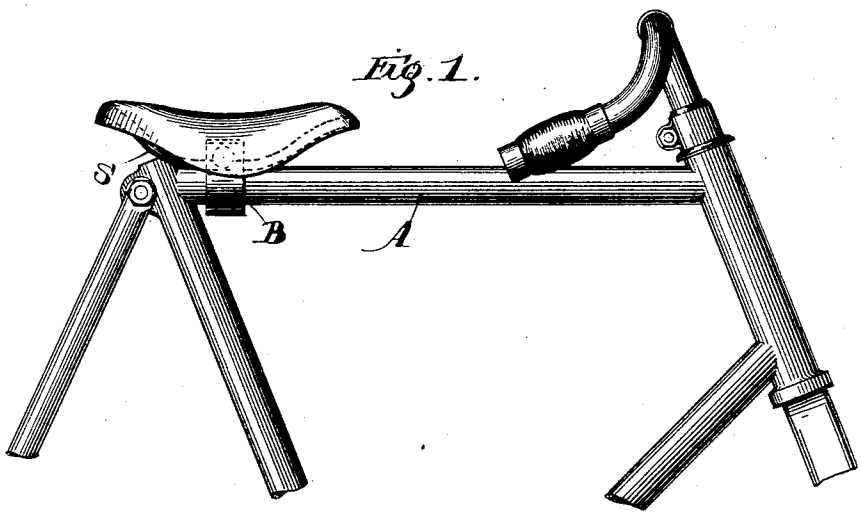

Fig. 2.

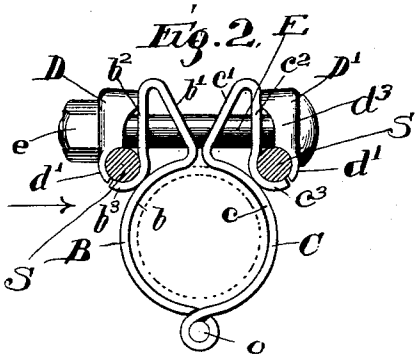

Fig. 3.

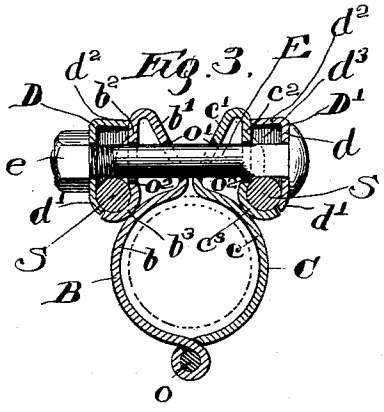

Fig. 4.

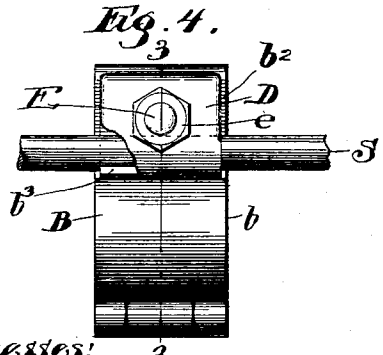

Fig. 5.

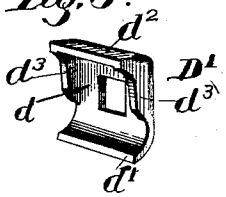

Witnesses:
Chas. A. Shewey.
M. L. Shahan.

Inventor:
Edward P. Chalfant
per Miles Maynard Bitner
His Atty.

THE NORRIS PETERS CO., PHOTO-LITHO., WASHINGTON, D. C.

UNITED STATES PATENT OFFICE.

EDWARD P. CHALFANT, OF KENOSHA, WISCONSIN.

SEAT-CLAMP FOR BICYCLES.

SPECIFICATION forming part of Letters Patent No. 590,256, dated September 21, 1897.

Application filed November 16, 1896. Serial No. 612,377. (No model.)

To all whom it may concern:

Be it known that I, EDWARD P. CHALFANT, a citizen of the United States of America, residing at Kenosha, in the county of Kenosha and State of Wisconsin, have invented certain new and useful Improvements in Seat-Clamps for Bicycles, of which the following is a specification.

My invention relates to certain improvements in seat-clamps for bicycles, the object being to provide a clamp adapted to be secured to the framework or other parts of the bicycle and support the saddle; and to such end it consists in certain novel features of construction which will be fully described in the following specification, and more particularly pointed out in the claim appended hereto.

The invention is clearly illustrated in the drawings furnished herewith, in which—

Figure 1 is a side elevation of the upper portion of a bicycle-frame with my improved seat-clamp applied thereto and supporting a saddle. Fig. 2 is a front view of the seat-clamp, the supporting-springs of the saddle being shown in cross-section. Fig. 3 is a central vertical cross-section through the seat-clamp, the section being taken in line 3 3, Fig. 4. Fig. 4 is a side view of a seat-clamp, the view being in the direction of the arrow in Fig. 2; and Fig. 5 is a perspective view of a clamp-block adapted to hold the saddle-spring in place upon the seat-clamp.

In Fig. 1, A represents the horizontal member of the framework of a bicycle, upon which is shown my improved seat-clamp secured thereto. As shown, the seat-clamp is preferably constructed of sheet metal, in order to give it great strength and at the same time to decrease its weight. The main portions of the clamp consist of two similarly-shaped clamping portions B C, each bent into a semicircle $b\ c$ and hinged together at their lower ends, as seen in Figs. 2 and 3, the two ends being bent about the pin o in the form of an ordinary strap-hinge. The ends of the semicircles $b\ c$ are bent into two diverging portions $b'\ c'$, which in turn are bent back into the portions $b^2\ c^2$, approximately parallel to each other and merging into the segments $b^3\ c^3$, lying adjacent to the upper faces of the semicircular portions $b\ c$, the object of which will be hereinafter more fully explained.

Two clamping-jaws D D' are provided to clamp the saddle-springs to the seat-clamp, and, as shown in Fig. 5, these clamping-jaws consist of flat portions d, merging at their lower ends into the segments d', flanges $d^2\ d^3$ being formed upon the three remaining sides. The flanges d^3 are cut away, as seen in Figs. 2 and 5, to form a continuance of the segment d', the saddle-springs S being held between the segments $b^3\ c^3$ of the main portions and segments d' of the clamping-jaws D D'. A bolt E is passed through the clamping-jaws and members $b'\ b^2\ c'\ c^2$ of the main portions, openings being made therein to allow the bolt to pass through, and a nut e is provided upon the bolt by which the various parts may be clamped together. The openings o' in the members $c'\ b'$ are of approximately the same diameter as the bolt, as are also the openings in the clamping-jaws, the opening in the clamping-jaw D' being preferably square, in order to prevent the bolt from turning when the nut is being applied thereto. The openings o^2 in the members $b^2\ c^2$ are, however, preferably slightly elongated, in order that when the bolt is tightened and the various parts brought toward each other the members $b^2\ c^2$ may slide up the semicircular portions $b\ c$ and thereby wedge the saddle-springs between the segments $b^3\ c^3$ and the bolt, besides clamping the springs between the coacting segments.

To apply the seat-clamp to the bicycle, the bolt is removed therefrom, and the main portions B C swung apart and clasped about the horizontal member of the bicycle or seat-post, as desired. The saddle-springs are then placed in the segments $b^3\ c^3$, the clamping-jaws applied, the bolt thrust through the openings, and the nut secured thereon, the tightening of the bolt evidently clamping the portions B C upon the bicycle and the seat-springs between the coacting segments and bolt.

I have shown and described the seat-clamp as adapted to support the saddle of a bicycle, but it is very evident that the clamp may be attached at any place along the upper member of the bicycle and secured to a suitable saddle and utilized as a child's seat.

I claim as new and desire to secure by Letters Patent—

A seat-clamp made up of the two sheet-metal main portions, B, C, hinged together at the bottom and semicircular in shape, said portions being extended upward and perforated and then back upon themselves and again perforated in line with the first-mentioned perforations and having their ends concave outwardly and resting upon the upper portion of the semicircular main portions, B, C, the perforated clamping-jaws, D, D′, adapted to oppose the concave ends and clamp the saddle-springs against the same and the clamping-bolt, E; substantially as described.

EDWARD P. CHALFANT.

Witnesses:
FRANCIS F. GILCHRIST,
A. S. THOMPSON.