Feb. 28, 1933. Z. S. LOGAN ET AL 1,899,762

BED

Filed Aug. 25, 1930 2 Sheets-Sheet 1

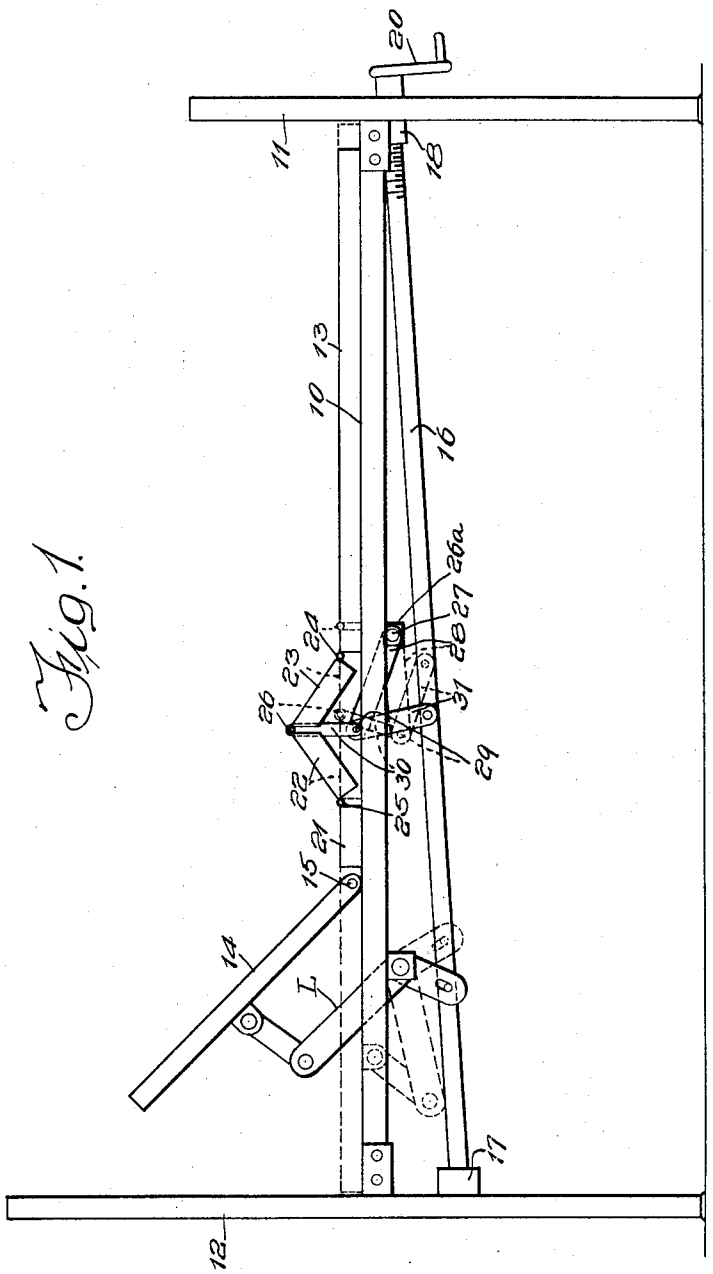

Fig. 1.

Witness:
William P. Kilroy

Inventors
Zack S. Logan
William P. Pike.
By Charles S. Wilson
Atty.

Feb. 28, 1933. Z. S. LOGAN ET AL 1,899,762

BED

Filed Aug. 25, 1930 2 Sheets-Sheet 2

Fig. 2.

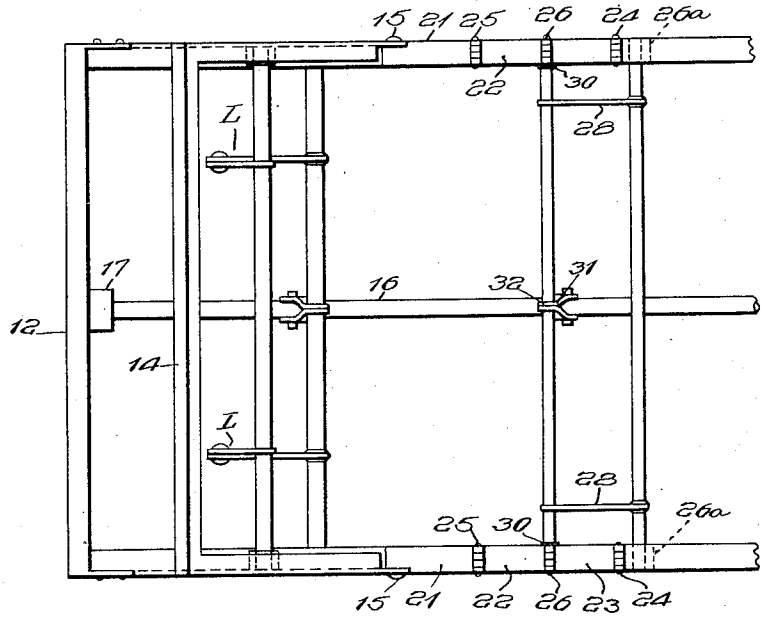

Fig. 3.

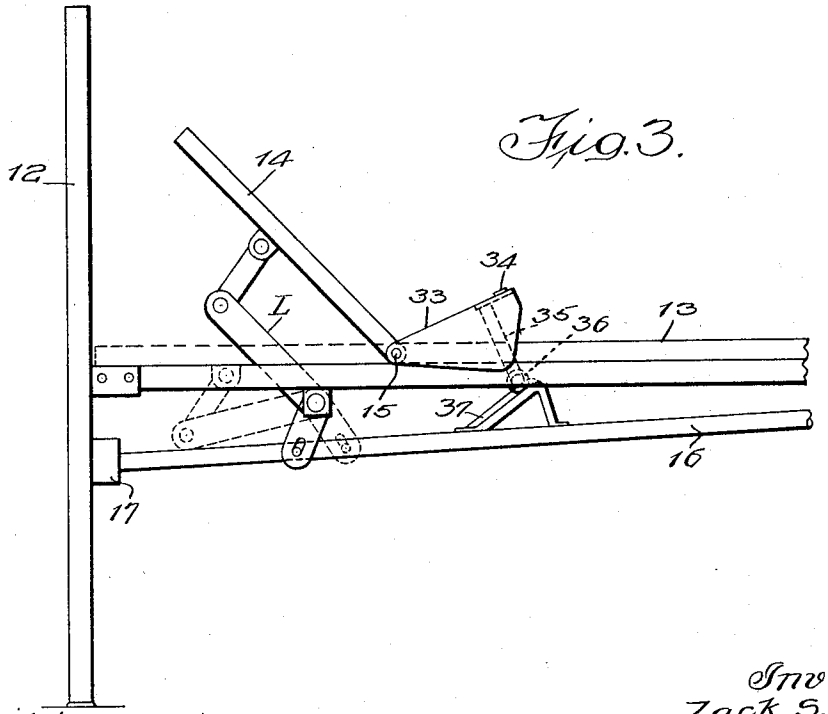

Witness:
William P. Kilroy

Inventors
Zack S. Logan
William P. Pike
By Charles S. Wilson
Atty.

Patented Feb. 28, 1933 1,899,762

UNITED STATES PATENT OFFICE

ZACK S. LOGAN AND WILLIAM P. PIKE, OF LOUISVILLE, KENTUCKY, ASSIGNORS TO THE LOGAN CO., OF LOUISVILLE, KENTUCKY, A CORPORATION OF KENTUCKY

BED

Application filed August 25, 1930. Serial No. 477,598.

This invention relates to new and useful improvements in beds, and while it is of general application, it is particularly designed for use in conjunction with beds having head rests whereby the occupant of the bed is prevented from slipping away from or upon the head rest when using the same.

With the above and other objects in view, as will be apparent, this invention consists in the construction, combination and arrangement of parts, all as hereinafter more fully described, claimed and illustrated in the accompanying drawings wherein:

Fig. 1 is a side elevation of a bed embodying the present invention;

Fig. 2 is a plan view of the head end thereof illustrating the operating mechanism for both the head rest and a non-slip or seat device forming the subject matter of the present invention; and

Fig. 3 is a fragmentary side elevation of the head end of a bed illustrating a modified form of the present invention coacting therewith.

The present invention is primarily designed for use in conjunction with hospital beds wherein one end of the spring frame or equivalent structure may be raised, together with the mattress thereon, to act as a head rest for the bed occupant. When such head rest is in use the occupant's body reclines against the rest and there is a decided tendency for the body of the occupant to slide toward the foot of the bed. The present invention is designed primarily to eliminate such movement or tendency by placing a body rest or seat in advance of the base of the head rest so that as the patient's body reclines against the head rest he will also occupy a substantially seated posture upon the non-slip or seat device forming the subject matter of the present invention.

The present invention also contemplates the automatic and simultaneous elevation or operation of the seat or non-slip device with the head rest so that as the head rest is raised the non-slip device or seat is likewise raised, and reversely, as the head rest is lowered, the seat or anti-slip device will also be lowered.

Reference being had more particularly to the drawings 10 designates a bed frame having a foot end 11 and a head end 12. A spring frame 13 is mounted upon the bed frame 10 and is provided with a head rest section 14 which is hinged to the remainder of the frame as at 15. In order to operate the head rest 14 to raise and lower the same, a shaft 16 is disposed below the bed frame 10 and extends from the foot end 11 to the head end 12. The head end 12 is provided with a bearing 17, in which one end of the shaft 16 operates loosely and may reciprocate. The foot end 11 of the bed adjoining the end of the frame 10 is provided with a bearing 18 into which the opposite end of the shaft 16 extends. This shaft 16 does not rotate but is movable longitudinally of the bed frame 10 in the bearings 17 and 18. The longitudinal movement of the shaft is accomplished by the crank 20, or equivalent mechanism, at one end of the bed through a means which, as it forms no part of the present invention, is neither shown nor described herein. As the crank or equivalent mechanism 20 is rotated or operated in one direction or the other, the shaft 16 moves longitudinally with respect to the bed frame 10.

A link mechanism L, forming no part of the present invention, is interposed between the head rest 14 and the shaft 16 so that as the shaft is reciprocated, as above described, the head rest will be raised or lowered; thus by moving the shaft in one direction the head rest 14 is elevated to a position at an angle to the bed frame 10 as shown in full lines in Fig. 1 and when the shaft 16 is moved in the opposite direction the head rest is lowered to occupy a position parallel to the bed frame 10, as shown in dotted lines in Fig. 1.

The section 21 of the spring frame to which the head rest 14 is pivoted at 15 is fixed to the bed frame 10 and is immovable with respect thereto. All other portions of the spring frame 13 are movable with respect to the bed frame 10 as will be hereinafter described.

Pivoted at the opposite side of the section 21 of the spring frame 13 to the pivot 15, as at 25 is a relatively short seat section 22 of the spring frame, which also has pivoted thereto, as at 26, a second and similar seat section 23

that, in turn, is pivoted as at 24 to the main portion 13 of the spring frame. When the seat sections 22 and 23 occupy the position shown in full lines of Fig. 1, the head rest 14 is elevated and the occupant's back may recline against the said rest while partially seated upon the first section 21 of the spring frame with the thighs resting at least in part upon the said section 22. Thus the occupant of the bed is supported against the head rest 14 and is prevented from slipping downwardly along the head rest and the spring frame.

When the head rest occupies the dotted line position shown in Fig. 1, the said sections 22 and 23 are designed to occupy similar positions so that all of the sections of the spring frame will rest coplanar one with the other and present a smooth flat sleeping surface.

The mattress of the bed is, of course, placed upon the spring frame and moves with and as the aforesaid elements of the spring frame move.

In order that the said sections 22 and 23 of the present invention may be moved simultaneously and correspondingly with the head rest 14 they are actuated and controlled from the shaft 16, which actuates and controls the movement of the head rest 14.

With this end in view there is disposed below the inner end of the main section 13 of the spring frame and secured to each side rail of the bed frame 10, a bearing 26*a* in which is journalled a transverse shaft 27. A pair of arms 28 are fixed to the shaft 27 and at their outer terminals are pivotally connected to a second transverse shaft 29. The ends of this second transverse shaft 29 are provided with upwardly extending arms 30, which are secured to the pivots 26 between the seat sections 22 and 23. A link 31 is pivoted to the shaft 16 at a point below the sections 22 and 23 of the spring frame and this link is in turn pivoted to the shaft 29 as at 32. Thus as the shaft 16 is moved longitudinally the arms 28, having fixed pivots on the shaft 27, are oscillated by the link 31, which causes the shaft 29 to swing with the link 31 raising and lowering the arms 30. Thus the movement of the shaft 16 in one direction moves the pivot of the arm 31 toward the bearing 17, swinging the outer ends of the arms 28 upwardly about the shaft 27, thereby elevating the shaft 29 and the arms 30 and raising the pivots 26 between the sections 22 and 23. In this manner the seat sections 22—23 are positioned at angles one to the other and to sections of the spring frame connected by the pivot 24. This movement of the elements causes the body of the spring frame to slide upon the bed frame 10 toward the head end 12. The reverse movement of the shaft 16 causes the pivot of the link 31 to move toward the foot end 11 of the bed, which in turn causes said link 31 and arms 28 to swing downwardly toward the shaft 16 thereby lowering the shaft 29 and the said sections 22 and 23 to rest coplanar with the body of the spring frame and sections 21 and 14 thereof. Likewise this movement causes the body of the spring frame to slide toward the foot end 11 of the bed.

From the foregoing it is manifest that simultaneously with the raising and lowering of the head rest 14 and from the same operating mechanism the said sections 22 and 23 are raised and lowered.

In Fig. 3 is disclosed a modified form of the present invention wherein the body 13 of the spring frame remains resting upon the bed frame 10 irrespective of the position of the head rest 14 or of the seat or anti-slip device. In this form of the invention the shaft 16, by its longitudinal movement and through the link mechanism L raises and lowers the head rest 14 of the spring frame as in the structure shown in Fig. 1. The anti-slipping or seat device, forming the subject matter of the present invention constitutes a pair of plates 33 pivoted to the pivot 15 connecting the head rest 14 to the spring frame 13. These plates are disposed upon each side of the bed frame 10 and are connected by a flat metal bar or strap 34 whereby they operate in unison. Disposed below the strap or bar 34 is a U-bar 35, the arms of which extend between the bed frame 10 and the mattress and spring while the body of the bar 35 rests below the lower plane of the mattress and spring. This U-bar is provided with a central roller 36 which is disposed above the shaft 16. A sloping track 37 is attached to the shaft 16 so that as the shaft reciprocates as above described, the track will move under the roller 36. Thus, as the shaft 16 is moved longitudinally in one direction to elevate the head rest 14, the roller 36 is caused to travel upwardly on the track 37 thereby elevating the U-bar 35 and plates 33 and by that means raising the mattress resting thereon. When the shaft 16 is moved longitudinally in the opposite direction the roller 36 travels downwardly upon the track 37 permitting the U-bar 35, plates 33 and strap or bar 34, together with the mattress thereon to move downwardly toward the bed frame 10 until the strap 34 rests directly upon the springs of the frame 13.

Again it is apparent that simultaneously with the raising and lowering of the said rest 14, the seat structure is raised and lowered to provide a support for the occupant of the bed in advance of the head rest 14.

From the foregoing it is obvious that in both forms of the present invention the head rest 14 is raised and lowered by the longitudinal movement of the shaft 16 and that at the same time the non-slipping device or seat structure is correspondingly raised and lowered from the shaft 16. In this manner

when the seat structure or non-slipping device and the head rest are lowered a plane smooth sleeping surface is provided while the raising of the head rest automatically positions the non-slipping device or seat structure in advance thereof so that the occupant of the bed, in reclining against the head rest is so supported that there will be no movement toward the foot end of the bed.

What is claimed is:

1. The combination with a bed frame, of a sectional spring frame mounted thereon the sections thereof being pivoted one to the other and one of the sections being fixed to the bed frame, a shaft disposed longitudinally of the bed frame, a second shaft mounted on the bed frame transversely of the first shaft, a second transverse shaft positioned parallel to the first transverse shaft, arms fixed to the first transverse shaft at one end and pivotally connected to the parallel transverse shaft at their opposite ends, connections between said second transverse shaft and the pivots between two of the spring frame sections, and a link pivoted to the longitudinal shaft and to the second transverse shaft whereby longitudinal movement of the longitudinal shaft will elevate or lower the adjoining spring frame sections connected to the second transverse shaft.

2. The combination with a bed frame, of a spring frame section fixed to said bed frame, a pair of body supporting spring frame sections hinged to each other and to the fixed section, an operating shaft disposed to reciprocate longitudinally of the bed frame, a pair of transverse shafts, one mounted on the bed frame and the other to swing in an arc about the first said shaft, a plurality of arms connecting said transverse shafts, connections between the movable transverse shaft and the body supporting spring frame sections, and a connection between the movable transverse shaft and the longitudinal shaft whereby movement of the latter causes the former to swing about its pivot and raise and lower the body supporting frame sections.

3. The combination with a bed frame, of a spring frame section fixed to said bed frame, a pair of body supporting spring frame sections hinged to each other and to the fixed section, an operating shaft disposed to reciprocate longitudinally of the bed frame, a pair of transverse shafts, one mounted on the bed frame and the other to swing in an arc about the first said shaft, a plurality of arms connecting said transverse shafts, connections between the movable transverse shaft and the pivotal joint between the body supporting spring frame sections, and a connection between the movable transverse shaft and the longitudinal shaft whereby movement of the latter causes the former to swing about its pivot and raise and lower the body supporting frame sections.

4. The combination with a bed frame, of a spring frame section fixed to said bed frame, a pair of body supporting spring frame sections hinged to each other and to the fixed section, a slideable spring frame section pivoted to the body supporting section spring frame remote from the fixed spring frame section, an operating shaft disposed to reciprocate longitudinally of the bed frame a pair of transverse shafts, one mounted on the bed frame and the other to swing in an arc about the first said transverse shaft, a plurality of arms connecting said transverse shafts, connections between the movable transverse shaft and, the pivotal joint between body supporting spring frame sections, and a connection between the movable transverse shaft and the longitudinal shaft whereby movement of the latter causes the former to swing about its pivot and raise and lower the body supporting frame sections.

5. The combination with a bed frame, of a spring frame section fixed to said bed frame, a pair of body supporting spring frame sections hinged to each other and to the fixed section, an operating shaft disposed to reciprocate longitudinally of the bed frame, a pair of transverse shafts, one mounted on the bed frame and the other to swing in an arc about the first said shaft, a plurality of arms connecting said transverse shafts, connections between the movable transverse shaft and the body supporting spring frame sections, and a link pivoted to the longitudinal shaft and to the movable transverse shaft, whereby movement of the former will swing the latter about its pivot to raise and lower the spring sections.

ZACK S. LOGAN.
WILLIAM P. PIKE.