(12) PATENT
(19) AUSTRALIAN PATENT OFFICE

(11) Application No. **AU 199672346 B2**
(10) Patent No. **701854**

(54) Title
Method and apparatus for sensing proximity or position of an object using near-field or magnetic effects

(51)[6] International Patent Classification(s)
G01D 005/14

(21) Application No: 199672346

(22) Application Date: 1996.06.06

(87) WIPO No: WO96/41134

(30) Priority Data

(31) Number	(32) Date	(33) Country
08/471192	1995.06.07	US

(43) Publication Date : 1996.12.30
(43) Publication Journal Date : 1997.02.20
(44) Accepted Journal Date : 1999.02.04

(71) Applicant(s)
Peter U. Wolff; Marshall E. Smith

(72) Inventor(s)
Peter U. Wolff; Marshall E. Smith Jr.

(74) Agent/Attorney
GRIFFITH HACK

CORRECTED VERSION*

PCT

page 47, claims, and pages 1/7 and 2/7, drawings, replaced by new pages bearing the same number

72346/96

INTERNATIONAL APPLICATION PUBLISHED UNDER THE PATENT COOPERATION TREATY (PCT)

(51) International Patent Classification 6 : G01D 5/14, 5/16, 5/20, 5 /12, 5/245, 5/48

A3

(11) International Publication Number: WO 96/41134

(43) International Publication Date: 19 December 1996 (19.12.96)

(21) International Application Number: PCT/US96/09087

(22) International Filing Date: 6 June 1996 (06.06.96)

(30) Priority Data:
08/471,192 7 June 1995 (07.06.95) US

(71)(72) Applicants and Inventors: WOLFF, Peter, U. [US/US]; 4005 Mahogany Run S.E., Winter Haven, FL 33884 (US). SMITH, Marshall, E., Jr. [US/US]; 2640 Eaton Avenue, Eaton, FL 33840 (US).

(74) Agent: WHITTLE, Jeffrey, S.; Allen, Dyer, Doppelt, Franjola & Milbrath, P.A., Suite 1401, 225 South Orange Avenue, P.O. Box 3791, Orlando, FL 32802-3791 (US).

(81) Designated States: AL, AM, AT, AU, AZ, BB, BG, BR, BY, CA, CH, CN, CZ, DE, DK, EE, ES, FI, GB, GE, HU, IS, JP, KE, KG, KP, KR, KZ, LK, LR, LS, LT, LU, LV, MD, MG, MK, MN, MW, MX, NO, NZ, PL, PT, RO, RU, SD, SE, SG, SI, SK, TJ, TM, TR, TT, UA, UG, US, UZ, VN, ARIPO patent (KE, LS, MW, SD, SZ, UG), Eurasian patent (AM, AZ, BY, KG, KZ, MD, RU, TJ, TM), European patent (AT, BE, CH, DE, DK, ES, FI, FR, GB, GR, IE, IT, LU, MC, NL, PT, SE), OAPI patent (BF, BJ, CF, CG, CI, CM, GA, GN, ML, MR, NE, SN, TD, TG).

Published

With international search report.

Before the expiration of the time limit for amending the claims and to be republished in the event of the receipt of amendments.

(88) Date of publication of the international search report:
6 February 1997 (06.02.97)

(54) Title: METHOD AND APPARATUS FOR SENSING PROXIMITY OR POSITION OF AN OBJECT USING NEAR-FIELD OR MAGNETIC EFFECTS

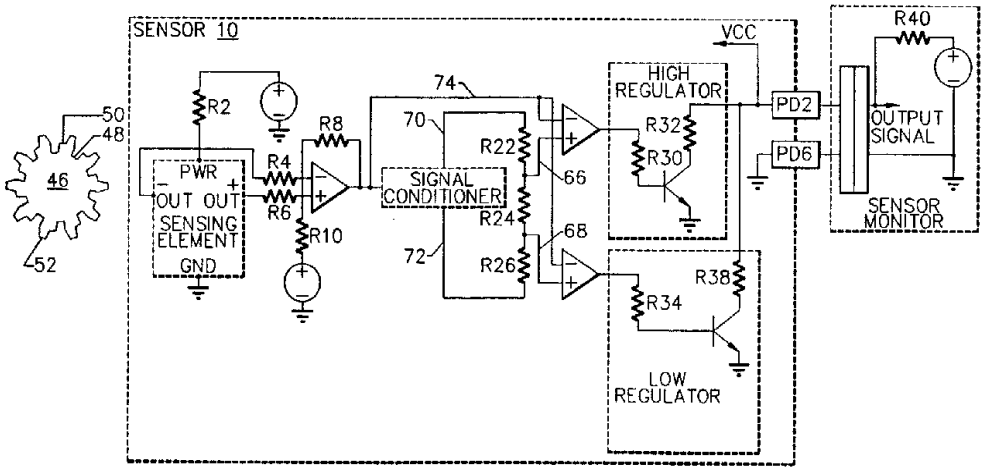

(57) Abstract

A method and apparatus for sensing proximity of an object using near-field effects or magnetic effects. The sensor chips are designed to accommodate numerous sensing elements. In the electromagnetic sensor, radio frequency energy is fed to an antenna. The antenna radiates this radio frequency energy to charge the surface of an object. When the position of the object changes, the impedance of the antenna due to near-field effects changes. This impedance change is detected to provide an indication of the object's movement. In the magnetic sensor, the sensing element is placed at a right angle to the sensor electronics to provide a smaller surface area across the diameter of the sensor. The magnet that charges the object to be detected is manufactured as a part of the sensor encapsulant. The sensing device may be packaged to be inserted into a wall to provide a sensor having a leakfree seal.

METHOD AND APPARATUS FOR SENSING PROXIMITY OR POSITION OF AN OBJECT USING NEAR-FIELD OR MAGNETIC EFFECTS

BACKGROUND OF THE INVENTION

Field of the Invention

This invention relates to sensing the proximity of an object using an electronic sensor, and more particularly, to using a sensor that responds to near-field electromagnetic effects or to changes in magnetic flux density resulting from changes in the position of an object.

Related Art

A position sensor is commonly used to determine the actual location of an object, whereas a proximity sensor is used to determine when an object moves past a certain point or position. Numerous proximity sensors are known in the art that react to various physical or electrical properties. The object to be detected is generally referred to as a target object or simply as a target. Previously disclosed magnetic proximity sensors require that the target be constructed of a ferrous or magnetic material and that the sensor be located at a precise and close distance

to the target. These sensors cannot distinguish between movements of the target and of other objects in close proximity to the target or the sensor. Prior devices are not designed to sense small objects at an extended range of close distances and are generally both bulky and expensive.

Capacitive and optical proximity sensors cannot operate through some cloudy gases or most liquids. Existing electromagnetic sensors use the Doppler effect and cannot detect the proximity of an object that moves slowly or that remains in one position for any length of time. Ultrasonic sensors cannot operate in environments where acoustic noise prevails such as on moving machinery.

Sensing Elements

A sensing element generates an electrical signal indicative of, perhaps proportional to, the distance between the sensor and a target. Contact-type sensing elements are generally physically connected to the target. Generally there are three types of noncontact sensing elements: magnetic types that measure the relative magnetic flux density caused by changes in the position of a magnetic target, electrical types that sense changes in electrical properties such as the capacitance or the inductance of the target, which change as the target moves, and optical types that generate a flow of photons and

measure the time it takes the photons to travel to the target and back.

Contact-type proximity sensors generally are not suited for applications where the target moves rapidly or where the target cannot be physically connected to the sensor, such as in monitoring rotating objects.

Many proximity sensors use magnetic sensing elements because most machines have valves or gears that are made of magnetic materials. The targets can generally be fitted with a magnet, or can be magnetized themselves. The sensor is applied by placing it in a position such that the magnetic lines of flux from the target magnet pass through the magnetic sensing element. The magnetic flux density is inversely proportional to the distance to the target and is therefore a direct function of the distance between the target and the sensor.

The target does not have to be magnetized if a magnet is placed behind the sensing element opposite the target. When the target moves closer it will tend to concentrate the flux density, and when it moves farther away it will separate the magnetic lines of flux cutting across the sensing element in the same manner as when the magnet is attached to the target. Prior magnetic proximity sensors place the magnet as a separate component in the sensor package and are thus bulky and relatively expensive to manufacture.

There are two primary types of magnetic sensing elements that can be realized on a chip, the Hall element and the magnetoresistor. The Hall element is less sensitive than the magnetoresistor and is therefore used for larger targets.

The magnetic sensing element must be placed parallel to the magnetic pole of the magnet for best operation. This allows the magnetic lines of flux to penetrate the magnetic sensing element at right angles and induces the maximum signal from the magnetic sensing element. The signal from the magnetic sensing element is an analog voltage inversely proportional to the distance to the magnet. In prior magnetic sensors the sensing element is usually fabricated on the same chip as the sensor signal conditioner such that the signal conditioner and the sensing element are on the same surface of the chip. The signal conditioner is usually many times larger than the sensing element. Thus the surface area of the chip is determined primarily by the size of the signal conditioner. The magnetic sensing element must be placed in the magnetic field so the magnetic lines of force intersect it perpendicular to the plane of the chip. Since the signal conditioner is also on the same plane, the diameter of the sensor is determined mostly by the area occupied by the signal conditioner.

Electrical sensing elements generally fall into three types: capacitive, inductive, and types

based on radar principles. The capacitive type forms one plate of a capacitor, while the target forms the other plate. When the target comes closer, the capacitance increases, and as it moves away the capacitance decreases. The sensor contains an oscillator whose frequency is dependent on the capacitance of the target and sensor capacitor plate combined. The output is generally a linear output proportional to target distance. The capacitor used must be fairly large, requiring that the sensor diameter be rather large. Also the capacitive sensing element cannot be surrounded by fluids that affect the capacitance, nor can it be in close proximity to other moving objects.

The inductive-type sensing element uses the electromagnetic properties of the target to modulate the inductance of an inductor in the sensor. An oscillator in the sensor is designed to oscillate only over narrow ranges of inductance. When the target moves such that it causes the inductance to change beyond a critical point, the circuit stops oscillating. The output of the inductive sensing element is therefore one of two voltage levels, one level being on when the target is not in close proximity and the other when the target moves close enough to the sensor to cause oscillations to cease. The inductive sensing element is usually realized by attaching a discrete inductor to a signal conditioner chip. This makes the

sensor quite large, unreliable, and expensive. This type of sensing element is also affected by fluids that contain magnetic particles and cannot distinguish between the target and other close moving objects.

Radar-type sensing elements generally transmit electromagnetic energy and monitor the reflected energy to determine the distance to the target. These sensing elements rely on the Doppler effect, wherein the relative frequency of the returning energy is modulated by the speed of the target. As the target moves toward the sensing element, the returned frequency steadily increases. As the target moves away, the returned frequency decreases. If the target is standing still or moving very slowly, the returned frequency is the same or is so close to the original that detection of any difference is impossible. Thus Doppler-type radar sensing elements are not suitable for monitoring the proximity of an object that may remain in one or more positions for any length of time. Prior radar sensing elements are generally realized using printed circuit boards and a discrete antenna and therefore are quite large, relatively unreliable, and expensive.

AMENDED SHEET

AUSTRALIAN PATENT OFFICE

Sensor Signal Conditioners

The most common use of a proximity sensor is for tracking the rotational movement of a gear or wheel or the position of an object such as a valve that can attain two or more preset positions, such as fully closed, halfway open, or fully open. In either case the signals from the sensing element will be the same for either a wheel with two tabs and a slot or a valve with three positions. The output of the proximity sensor is in the form of two digital pulses that are generated when the target moves beyond one of two preset points or when the valve attains one of three preset positions.

The pulses are switched on and off when the wheel rotates to a position such that the side of one of the tabs is directly in front of the sensor. The switch point is chosen along the sides of the tabs because this is the point at which the sensing element signal changes at its maximum rate for any given rotational velocity. This allows the minimum amount of hysteresis to be used in the pulse generation switching components in the signal conditioner. One pulse is generated when the side of the longest tab passes the sensor, and another when the side of the intermediate

AMENDED SHEET

AUSTRALIAN PATENT OFFICE

length tab passes. Both pulses are turned off when the side of the slot passes in front of the sensor.

Pulse generation is accomplished by comparing the output of the sensing element with two predetermined reference voltages stored in the signal conditioner, and generating pulses when the signal passes through these references. For instance, when the slot is in front of the sensor, the signal level is 4 volts; when the intermediate tab is in front, the signal level is 4.5 volts; and when the longest tab is in front, the sensing element output is 5 volts. The two switch points for the signal conditioner are then set to 4.25 and 4.75 volts. When the wheel rotates such that the side of the intermediate tab shared with the slot passes directly in front of the sensor, the signal level changes rapidly from 4 to 4.5 volts, and the first pulse is generated as it passes through 4.25 volts. As the wheel rotates farther, the side of the longest tab shared with the intermediate tab passes directly in front of the sensor, and the signal level changes rapidly from 4.5 to 5 volts. The second pulse is then generated as the signal level passes through 4.75 volts. As the wheel rotates farther, the side of the longest tab shared with the slot passes, and the signal level changes rapidly from 5 to 4 volts. Both pulses are turned off rapidly in succession as the signal level passes first through 4.75 volts and then through 4.25 volts.

The biggest problem with proximity sensors is encountered when setting these reference voltages. Due to electrical and physical differences between any one set of sensors and targets, the signal levels from any two sets of sensing elements in any two applications of the sensor can vary widely. Targets may be closer or farther away, may be larger or smaller, or more or less material may be placed in close proximity to the sensor, changing the sensing element signal levels significantly. The electrical characteristics of the sensing element and of calibration elements in the signal conditioner will also vary from one sensor to the next.

The signal conditioner sets these references by first determining the signal level from the sensing element when the slot and then the longest tab is directly in front of the sensor. It then sets the lowest reference to a value one-third of the difference between the two extremes, and sets the highest reference to two-thirds of the difference between these two extremes. These become the switch points at which the sensor output pulses are generated. In the example above for the range of 4 to 5 volts, the two references are set to 4.25 and 4.75 volts; so the sensor switches output when the sides of the tabs are encountered.

AUSTRALIAN PATENT OFFICE

AMENDED SHEET

Generally in currently known sensors this is done either by storing the analog voltage from the sensing element when the longest tab and the slot are in front of the sensor on two capacitors or by converting the levels to digital form and setting digital memory circuits to discrete numbers representing the reference levels. The problem with storing the levels on a capacitor are twofold: The first problem arises because the voltage stored on the capacitor constantly leaks off and must therefore be restored periodically. To overcome this, the signal conditioner stores this voltage on one capacitor each time the signal from the sensing element reaches its maximum level when the longest tab is in front of the sensor, and stores the voltage on the other capacitor when the signal level attains its minimum value when the slot is in front.

The capacitor must be large enough to hold a charge until the wheel turns again to the point where the longest tab or the slot is in front of the sensor. For most mechanical objects this requires a rather large capacitor. It is difficult to produce a sufficiently large capacitor to hold these charges for sufficient periods of time on an integrated circuit chip. The capacitor is therefore usually realized off-chip and connected electrically to the signal conditioner. This makes it expensive to manufacture,

reduces its reliability, and makes the sensor rather large in diameter.

The second problem with the capacitor reference method is also caused by constant dissipation of the stored energy in the capacitor. Thus the level must constantly be refreshed, or it will leak to zero. This refreshing can only be done when the signal from the sensing element is at its minimum or its maximum, when either the longest tab or the slot is directly in front of the sensor, or when the valve is fully open or fully closed. It cannot be done while the wheel is between either of these two positions. For this reason the object being monitored by this method must constantly be moving into one of these two extreme positions. If it stops at any other position or moves too slowly, the reference voltage will drop, and the next signal may not be generated correctly when the target resumes movement or speeds up.

The second method of setting the references is to use digital circuitry. The problem with this method is that a large amount of electronic circuit components must be used to get even modest precision. This technique requires an analog-to-digital converter to digitize the sensing element output, two digital storage sections to store the maximum and the minimum levels, and a digital-to-analog converter to reconvert the number back to a voltage level. The large amount of components required makes this method neither

economical nor reliable and also requires the sensor to be relatively large to accommodate the extensive number of components.

Proximity Sensors

Generally, magnetic sensing elements are less expensive than electrical sensing elements. However, not all targets can be made of magnetic material, and sometimes it is impractical to place a magnet in the sensor environment because the magnet could have a detrimental effect on the machine. Thus in any one application the more expensive electric sensor may be required. However, in both cases the signal conditioner would be the same. The ideal proximity sensor would provide a signal conditioner that could accommodate either type of sensing element. Generally proximity sensors have not been designed to take advantage of the economy of scale that could be realized if the sensing element and signal conditioner parts were interchangeable.

Proximity sensors have generally been designed to be held in place with external screws or clamps because of their relatively large mass.

SUMMARY OF THE INVENTION

At least preferred embodiments of the present invention provide an improved proximity sensor that detects

AUSTRALIAN PATENT OFFICE

the movement of small objects.

At least preferred embodiments of the invention monitor the movement of an object made of magnetic material without requiring that the object be magnetized or have a magnet attached.

Further, at least preferred embodiments of the invention monitor the proximity of an object that has a conductive surface that is not necessarily made of magnetic material.

Also, at least preferred embodiments of the invention sense the proximity of a small object while ignoring the effects of other objects that move into close proximity to the target object.

At least preferred embodiments of the invention determine the proximity of an object moving with any speed down to zero without an inordinate amount of components.

Further, at least preferred embodiments of the invention provide a sensor that can be inexpensively tailored to use one of two magnetic sensing elements to detect objects made of magnetic material, or to use an electromagnetic sensing element to detect nonmagnetic objects with conductive surfaces.

At least preferred embodiments of the invention provide a reduced-diameter proximity sensor.

Further, at least preferred embodiments of the invention provide a sensor that can be simply and removably

AUSTRALIAN PATENT OFFICE

secured to a wall.

In accordance with a first aspect of the present invention there is provided a system for sensing proximity or position of a movable target having a magnetic flux and a surface having a high region and a low region, the system having radio frequency producing means for producing radio frequency energy and being characterized by sensing means for sensing the magnetic flux density emitted by a region of the target surface positioned opposite the sensing means, translating means responsive to said sensing means for translating the sensed magnetic flux density into a position signal representative of a range of positions between a reference point and a moving target, comparing means responsive to said translating means for comparing the position signal with a predetermined high and a predetermined low reference signal corresponding, respectively, to the position signal generated when the high surface region and the low surface region are positioned opposite the sensing means, said comparing means including maximum and minimum generating means responsive to said sensing means for generating a maximum distance range voltage signal representative of a maximum distance range value between a reference point and a moving target and for generating a minimum distance range voltage signal representative of a minimum distance range value between a reference point and a moving target and storing means

AUSTRALIAN PATENT OFFICE

responsive to the maximum distance range signal and the minimum distance range signal for storing the maximum and minimum distance range voltage signal during a predetermined time period, and determining means responsive to said comparing means for determining the target position from the comparison of the position signal with the high and the low reference signal, said determining means including range value generating means responsive to said storing means for generating a range value signal having an amplitude representative of a range value between the maximum distance range value and the minimum distance range value and output generating means responsive to the range value signal for generating an output position signal representative of the distance between a reference point and a moving target when the amplitude of the range value signal exceeds a predetermined threshold.

Embodiments of the invention also provide a signal conditioner capable of generating at least three distinct signals when the target moves to one of up to three corresponding positions. This is accomplished by a reference voltage detection and storage circuit. This system uses neither large capacitors nor digital storage techniques; all components are on-chip, making the sensor smaller, less expensive, and more reliable. This also allows the sensing of targets that move slowly or that may remain in one position or stop rotating for indeterminate

AUSTRALIAN PATENT OFFICE

periods of time.

The present invention also uses in one embodiment a directional antenna to narrow the range of influence of the electromagnetic sensor, allowing the electromagnetic sensor to sense smaller objects and also allowing the sensor to ignore the movement of other close objects.

In one embodiment, the invention also teaches a physical arrangement of materials in the encapsulation material used to protect the sensor components. One part so formed is the antenna for an electromagnetic proximity sensor; the other part so formed is a magnet used in a magnetic proximity sensor.

In another embodiment the invention also discloses making the sensor round and providing it with attachment means adapted for mounting into a simple hole. This minimizes the amount of machining required to affix the sensor as well as the installation and removal time.

An embodiment of the invention provides for the insertion of a sensor into a ceramic cone bonded to a metal tube and the molding of the tube to an electrical connector to secure the sensory apparatus. This allows the length of the sensor to be changed as required by simply trimming the metal tube.

It is preferable, although not mandatory, that all sensing and signal conditioning components be arranged on a single integrated circuit for packaging into a very

AUSTRALIAN PATENT OFFICE

small and inexpensive device.

In accordance with a second aspect of the present invention there is provided a method for sensing proximity or position of a target, the method comprising the steps of radiating radio frequency energy with an antenna having an impedance, moving the target sufficiently adjacent the antenna so that the antenna impedance varies with a change in the target position as a result of a near-field effect, detecting the change in the antenna impedance in response to the changes in the target position, translating the detected change in the antenna means impedance into a position signal, comparing the position signal respectively with a reference signal corresponding to the position signal generated when the target is positioned within a predetermined range of the antenna, and determining the target position from the comparison of the position signal with the reference signal.

BRIEF DESCRIPTION OF THE DRAWINGS

Fig. 1 is a simplified block diagram of the sensor.

Fig. 2 is a detailed schematic diagram of the sensor.

(the next page is page 19)

AUSTRALIAN PATENT OFFICE

Editorial Note

Application Number: 72346/96

This specification does not contain page 18

FIG. 3 is a view of the sensor chip with an orthogonal sensing element.

FIG. 4a is a sectioned top view of the electromagnetic sensor.

FIG. 4b is a side view of the sensor shown in FIG. 4a.

FIG. 5 is a sectioned top view of the magnetic sensor.

FIG. 6 shows the electromagnetic sensor installed in the wall of a housing.

DESCRIPTION OF THE PREFERRED EMBODIMENTS

A detailed description of the present invention will now follow with reference to FIGS. 1-6.

The Hall element and magnetoresistor sensing elements will be referred to simply as magnetic sensing elements. The Hall element, magnetoresistor, and millimeter wave sensing elements will be referred to as sensing elements. Where a specific sensing element is discussed, it will be referred to by its full name.

Basic Sensor Operation

Referring to FIG. 1, there is shown a simplified block diagram of sensor **10** configured as a directional velocity sensor and connected to sensor monitor **S14**. This diagram also shows a target wheel **46** with slot **48**, intermediate tab **50**, and longest tab **52**. In this application sensor **10** monitors the directional velocity of wheel **46** and delivers two pulses to sensor monitor **S14**. As wheel **46** rotates in front of sensor

10, certain parts of the target pass into closest proximity to the sensor 10. As shown, when wheel 46 rotates clockwise, the closest part of wheel 46 is first slot 48; then as the wheel 46 rotates, the closest part becomes longest tab 52; then as wheel 46 rotates further, the closest part becomes intermediate tab 50.

A signal is generated in sensing element X2 that is inversely proportional to the distance between the closest part of wheel 46 and sensing element X2. The signal from sensing element X2 is highest when longest tab 52 is directly in front of sensing element X2 and is lowest when slot 48 is in front of sensing element X2. This signal is connected to differential amplifier U2 through metal conductors 4A and 4C, integrated conductors 2A and 2C, and then through resistors R4 and R6. Also connected through resistor R10 to the minus input of differential amplifier U2 is offset generator V4. The output of offset generator V4 helps cancel the effect of static offset signals from sensing element X2 caused by the sensing of other objects that are not wheel 46 such as the mechanical structure holding the wheel 46 or from the sensing of the material contained in the wheel 46 itself.

The output of differential amplifier U2 is position signal 74, an analog signal that is a function of the distance between the wheel 46 and sensor 10. When the longest tab 52 is in front of the sensor the

signal is at its highest level, and when the slot **48** is in front of the sensor the signal is lowest. Sensor element power is supplied by power supply **V2** through resistor **R2**.

Signal conditioner **S8** determines the value of position signal **74** when it is at its highest and its lowest point. Signal conditioner **S8** stores a voltage on high bus **200** that is equal to position signal **74** voltage when the longest tab **52** is in front of the sensor. This voltage so stored becomes high reference **70**. Signal conditioner **S8** stores a voltage on low bus **300** that is equal to position signal **74** voltage when slot **48** is in front of the sensor. This voltage so stored becomes low reference **72**.

Signal conditioner **S8** applies high reference **70** and low reference **72** across a voltage divider network composed of three equal-valued resistors **R22**, **R24**, and **R26**. The voltage at the connection between resistors **R24** and **R26** is one-third of the voltage differential between low reference **72** and high reference **70** and is called the low switch point **68**. This represents the value of position signal **74** when the wheel **46** is turned so the sensor is directly in front of the side of the intermediate tab **50** shared with slot **48**. The voltage at the connection between resistors **R22** and **R24** is two-thirds of the voltage difference between low reference **72** and high reference **70** and is called the high switch point **66**. This

represents the value of position signal **74** when the wheel is turned so the sensor is directly in front of the side of the longest tab **52** shared with intermediate tab **50**. Low switch point **68** and high switch point **66** are the points at which the sensor **10** output will change as wheel **46** rotates.

High switch point **66** and low switch point **68** are connected to reference pins on comparators **U10** and **U12**, respectively. The outputs of these comparators are connected through resistors **R30** and **R34** to transistors **Q4** and **Q6**. The collectors of these transistors are connected to sensor power through resistors **R32** and **R38**. Sensor power is supplied by power supply **V12** through signal resistor **R40**. The sensor output signal **76** is connected to the sensor at the same point as signal resistor **R40**. Sensor output signal **76** is inversely proportional to the current through signal resistor **R40**. As the current drawn by the sensor increases, the voltage dropped across signal resistor **R40** increases, and correspondingly the value of output signal **76** decreases. When transistor **Q4** or **Q6** is turned on, it decreases the effective resistance of sensor **10** and increases the current through signal resistor **R40**, causing a corresponding decrease in output signal **76**. Comparators **U10** and **U12** are connected such that both transistors **Q4** and **Q6** are normally on when slot **48** is directly in front of sensor **10**. Either transistor **Q4** or **Q6** is turned off when

either intermediate tab **50** or longest tab **52** rotates to the front of the sensor. This is done to allow the voltage level of output signal **76** to increase in a positive direction when the wheel **46** approaches sensor **10**. This makes the output condition of the sensor easier to assess by service personnel.

When slot **48** rotates to the front of sensor **10**, position signal **74** is lower than high switch point **66** and low switch point **68**, and both comparators **U10** and **U12** are turned on. This keeps switching transistors **Q4** and **Q6** both turned on. The current through **R40** is the sum of the current drawn by the components of the sensor connected to point **VCC** added to the currents drawn by transistors **Q4** and **Q6**. When wheel **46** rotates counterclockwise, intermediate tab **50** rotates to a position directly in front of sensor **10**. Position signal **74** rises to a value higher than low switch point **68**. Comparator **U12** turns off, switching transistor **Q6** off. Thus a current pulse of a first level is subtracted from the current drawn by sensor **10**, increasing the value of output signal **76**. As wheel **46** continues to rotate, longest tab **52** becomes closest to sensor **10**. Position signal **74** increases to a value higher than high switch point **66**. **U10** turns off, turning off transistor **Q4**. This decreases the current through **R40** and increases output signal **76** value.

The values of resistors **R32** and **R38** are equal, and the current gains of transistors **Q4** and **Q6**

are both equal. When each switching transistor **Q4** and **Q6** turns on, they both allow the same amount of current to flow through signal resistor **R40**. Note that whenever comparator **U10** is turned on, comparator **U12** is also always on because position signal **74** exceeds the value of high switch point **66** as well as that of low switch point **68**. This serves to halve the amount of current drawn through signal resistor **R40** when longest tab **52** is in front of the sensor compared to the amount of current drawn when intermediate tab **50** is in front of the sensor. When the longest tab **52** is in front of the sensor, both comparators **U10** and **U12** are turned off. In this situation the only current through signal resistor **R40** is that drawn by the sensor itself during normal operation. If this is 1 mA and each transistor **Q4** and **Q6** draws 1 mA, the sensor output will change from 3 mA when slot **48** is in front of the sensor to 2 mA when intermediate tab **50** is in front of the sensor, and then to 1 mA when longest tab **52** is in front of the sensor.

Note that the sequence of output pulses is a-b-c-a-b-c..., where a is the value of output signal **76** when sensor **10** faces slot **48**, b is the value of output signal **76** when sensor **10** faces intermediate tab **50**, and c is the value of output signal **76** when sensor **10** faces longest tab **52**. This sequence occurs when wheel **46** is rotating counterclockwise. If wheel **46** rotates clockwise, longest tab **52** follows slot **48**. The

sequence of output pulses then becomes a-c-b-a-c-b.... Monitoring equipment connected to the sensor output then determines whether pulse b or pulse c immediately follows the detection of pulse a to determine the direction of rotation of wheel **46**.

Detailed Signal Conditioner Operation

FIGURE 2 shows the sensor **10** schematic, including main chip **12**; sensing elements **X2**, which comprise Hall element **X2a**, magnetoresistor **X2b**, or millimeter-wave chip **X2c**; signal conditioner **S8**; and sensor monitor **S14**. As discussed, signal conditioner **S8** generates high switch point **66** and low switch point **68** by placing a voltage equal to the maximum value of position signal **74** on high reference **70** and by placing a voltage equal to the minimum value of position signal **74** on low reference **72**. This is accomplished as follows:

Signal conditioner **S8** includes comparators **U100-U106** coupled through logic sections **S100-S108**, flip-flops **U400-U408**, and bus drive sections **S200-S208**. Logic sections **S100-S108** include a plurality of inverters **U200-U206** and a plurality of AND gates **U302-U308**. Signal conditioner **S8** also includes calibrate section **S2** and reset section **S4**. Reset section **S4** serves to clear any previous settings of signal conditioner **S8** and operates when power is first applied to sensor **10**. Calibrate section **S2** serves to restrict operation of signal conditioner **S8**. Signal conditioner

S8 does not reset high reference 70 and low reference 72 unless a signal is generated by calibrate section S2.

When calibrate section S2 output is enabled, signal conditioner S8 compares position signal 74 to the voltage already present on low bus 200 and high bus 300 and switches the bus voltage higher or lower as needed until high bus 200 matches the highest position signal 74 and until low bus 300 voltage matches the lowest position signal 74. Operation of signal conditioner S8 is as follows:

When power is initially supplied to sensor 10 by sensor monitor S14, capacitor C4 in reset section S4 begins to charge to supply voltage VCC through resistor R16. At first, there is no voltage dropped across capacitor C4; so the voltage at the junction of R14 and R16 is equal to supply voltage VCC. This places supply voltage VCC on the base of transistor Q2, causing it to turn on and to apply supply voltage VCC to its emitter through its collector. The emitter of transistor Q2 is connected to the reset pins of flip-flops U400-U408. This causes them to all be reset, placing a logic low voltage on all Q outputs of flip-flops U400-U408. This logic low is applied to the bases of all transistors Q500-Q506 and Q602-Q608 and turns them all off. The emitters of Q500-Q506 are connected to high bus 200. Resistor R18 pulls the voltage on high bus 200 to ground when all transistors Q500-Q506 are off. The

emitters of Q602-Q608 are connected to low bus 300. Resistor R20 pulls the voltage on low bus 300 to the value of sensor power VCC when all transistors Q600-Q608 are off. Thus reset section S4 serves to apply the lowest voltage available (ground) to high bus 200 and the highest voltage available (VCC) to low bus 300. Capacitor C4 continues charging until fully charged. At this time current through R16 ceases. The voltage at the base of Q2 then returns to ground potential, turning transistor Q2 off and disabling the reset voltage on flip-flops U400-U408.

Sensor monitor S14 applies 7 volts initially to sensor 10 upon power-up. This is done only when signal conditioner S8 is to be recalibrated such as during initial power-up. This VCC at 7 volts is applied to calibrate section S2 at the top of resistor R12, which is connected to zener diode Z2, which maintains 6 volts on its top terminal. This serves to apply 7 volts to the "+" input pin of comparator U4 and applies 6 volts to the "-" pin of comparator U4. This brings the output of comparator U4 to a high value near the value of VCC. This is applied to the middle input pins of three-input AND gates U302-U308. The signal conditioner section S8 is now enabled. PD2 and PD6 represent sensor wire bond pads.

During calibration wheel 46 must rotate at least enough to place slot 48 and then longest tab 52 in front of sensor 10. This allows position signal 74

to attain its minimum and its maximum values. Position signal **74** is applied to the "+" input of a series of comparators (**U100-U108**). Applied to each threshold "-" input of these comparators (**U100-U108**) is a voltage taken from reference section **S6** that includes a series of voltage references **V100-V106**. Each reference has a voltage differential of 1 volt. The threshold voltage on each comparator (**U100-U108**) therefore is about 1 volt higher than the voltage on the comparator below it. The result is that each comparator (**U100-U108**) will be on (output high) when the voltage of the input signal is higher than its threshold voltage.

All of the comparators having a threshold voltage below position signal **74** will be on, and all those comparators having a threshold voltage higher than position signal **74** will be off. For example, when wheel **46** rotates such that slot **48** is in front of sensor **10**, and given an example position signal **74** of 2.25 volts for this situation, comparator **U104** and all comparators below (**U106** and **U108**) will be on, and all comparators above (**U100** and **U102**) will be off.

The output of each comparator **U100-U108** goes to logic sections **S100-S108**. One output goes straight into the lowest input of an AND gate (**U302-U308**) in one of the logic sections. The other output of the comparator goes to an inverter (**U200-U206**) whose output is connected to the highest input pin of an AND gate (**U302-U308**) below it. The output of comparator **U100**

goes directly through logic section **S100** to flip-flop **U400**. At only one logic section **S102-S108** will both top and bottom inputs to any AND gate (**U302-U308**) be high.

For the example above, with a signal of 2.25 volts, comparator **U104** will be on, **U100** and **U102** will be off, and the AND gate **U304** will be on. All comparators (**U106** and **U108**) below comparator **U104** will also be on, delivering a high state to the inverter below them (**U206**), which places a low state on the AND gate **U308**. None of the comparators above comparator **U104** will be on, delivering a low state to AND gate **U302** and flip-flop **U400** connected directly to comparator **U100** output.

Whichever AND gate **U302-U308** is on applies a high voltage to the set pin of its corresponding flip-flop **U402-U408**. This brings its "Q" output high and turns on the appropriate transistors **Q500-Q506** and **Q602-Q608** through resistors **R500-R506** and **R602-R606**. The collectors of transistors **Q500-Q506** and **Q602-Q608** are connected to an appropriate reference **V100-V106**. The emitters of transistors **Q500-Q506** are connected to high bus **200**. The emitters of transistors **Q602-Q608** are connected through blocking diodes **D602-D608** to low bus **300**. The result is that the appropriate voltage representing the level of position signal **74** is electrically switched onto high bus **200** and low bus **300**. In the example above for a position signal **74**

voltage of 2.25 volts, flip-flop **U404** will be on and will enable transistors **Q504** and **Q604**, placing 2 volts on high bus **200** and on low bus **300**.

Wheel **46** is then allowed to rotate such that longest tab **52** is directly in front of sensor **10**. Position signal **74** then goes to its highest value, enabling appropriate comparators **U100-U108** as signal levels rise above appropriate reference voltages from **V100-V106**. This in turn enables appropriate flip-flops **U400-U408**, allowing transistors **Q500-Q506** and **Q602-Q608** to place appropriate voltages on high bus **200** and low bus **300**. Whichever flip-flop **U400-U408** below the appropriate flip-flop **U400-U408** was enabled by the level of position signal **74** when slot **48** was directly in front of sensor **10** will remain set, also enabling corresponding transistors **Q500-Q506** and **Q602-Q608**. Also, any flip-flops **U400-U408** between the flip-flop **U400-U408** set when slot **48** was directly in front of sensor **10** will also be enabled.

Any number of transistors **Q500-Q506** and **Q602-Q608** will therefore be enabled when wheel **46** turns to place slot **48** and then longest tab **52** in front of sensor **10**. Each transistor **Q500-Q506** will attempt to place a lower voltage on high bus **200** than the transistor **Q500-Q506** above it. When any two transistors **Q500-Q506** are enabled, the voltage being placed on high bus **200** by any transistor will serve to

reverse bias the base-emitter junction of all transistors **Q500-Q506** below it, disabling them.

Each transistor **Q602-Q608** will also attempt to place a higher voltage on low bus **200** than the transistor **Q602-Q608** below it. However, blocking diodes **D602-D608** will become reverse biased by the reference voltage placed on low bus **300** by any transistor **Q602-Q608** above it. When any two transistors **Q602-Q608** are enabled, the voltage being placed on low bus **300** will serve to reverse bias the junction of all blocking diodes **D602-D608** below it, preventing them from applying any other reference voltage to low bus **300**.

In the example above, assuming a reference signal **74** of 3.25 volts when longest tab **52** is directly in front of sensor **10** and with 2 volts already applied to high bus **200** and low bus **300**, comparator **U102** will be on and comparator **U100** will be off. AND gate **U302** will be enabled, setting flip-flop **U402**. The "Q" outputs of both flip-flop **U402** and **U404** will both be on, turning on transistors **Q502** and **Q504** and transistors **Q602** and **Q604**. Transistor **Q502** will apply 3 volts to high bus **200**. This 3 volts will be higher than the 2 volts being applied by transistor **Q504** and will reverse bias its base-emitter junction. Transistor **Q604** will apply 2 volts through blocking diode **D604** to low bus **300**, while transistor **Q602** attempts to apply 3 volts through blocking diode **D602**.

The 2 volts applied through blocking diode **D604** will reverse bias blocking diode **D602**. The result will be 3 volts on high bus **200** representing position signal **74** when longest tab **52** is in front of sensor **10**, and 2 volts on low bus **300** representing position signal **74** when slot **48** is in front of sensor **10**.

After wheel **46** has rotated to place at least one slot **48** and one longest tab **52** in front of sensor **10**, sensor monitor **S14** lowers sensor supply voltage **VCC** to 5 volts. This places 5 volts on the "+" pin of comparator **U4** in calibrate section **S2**. Due to the turn-off delay of zener **Z2**, 6 volts will remain on the "-" pin of **U4** for a finite amount of time. Comparator **U4** output will go low, disabling AND gates **U302-U308**. All flip-flops **U400-U408** will remain set. The voltages placed on high bus **200** and on low bus **300** will remain set to their highest and lowest values achieved by position signal **74**. The result is that high reference **70** will be equal to the value of position signal **74** when longest tab **52** is in front of sensor **10**, and low reference **72** will be equal to the value of position signal **74** when slot **48** is in front of sensor **10**. Sensor **10** is now calibrated. As wheel **46** rotates, sensor **10** output will change as required.

Signal conditioner **S8** is shown with only 5 voltage taps: 0, 1, 2, 3, and 4 V. Other applications may require different numbers of references and different values for these voltages. Specifically,

higher resolution will require more references. Also, different reference section components **S8** can be used to obtain these voltages. All analog switch transistors **Q500-Q506** and **Q602-Q608** are shown as bipolar; however, any device can be used provided it will pass the appropriate value and provided the bus voltage selection of highest or lowest of any plurality is maintained.

Magnetic Sensing Element Operation

In FIG. 3 Hall element **X2a** or magnetoresistor **X2b** is shown placed at right angles to signal conditioner **S8** circuitry and other sensor **10** circuitry on main chip **12**. All circuit components comprising signal conditioner **S8** and other sensor **10** components are formed on the surface of a wafer, then main chip **12** is cut from this wafer. In addition to other circuit components, integrated conductors **4a-4d** are formed on main chip **12** by heavily doped semiconductor material. Metal conductors **2a-2d** are then placed over integrated conductors **4a-4d**. Main chip **12** is then rotated 90 degrees, and integrated conductors **8a-8d** and metal conductors **6a-6d** are formed on the side of main chip **12**. Metal conductors **2a-2d** and **6a-6d** are placed directly over integrated conductors **4a-4d** and **8a-8d** and serve to electrically connect signal conditioner **S8** to magnetic sensing element **X2**. Then either Hall element **X2a** or magnetoresistor **X2b** is formed on the side of main chip **12**. The result is a magnetic sensing element

X2 formed at right angles to main chip 12 components. The surface area required for sensing element X2 is much smaller than the surface area required for remaining sensor 10 circuit components. This serves to make sensor 10 as small in diameter as possible in a plane facing the wheel 46.

In FIG. 5 are shown magnetic sensor 56 with output wire 58 and ground wire 60, magnetic material 16, and nonmagnetic material 14. Main chip 12 is attached to output wire 58 and ground wire 60 using conductive epoxy. This assembly is then encapsulated partially with magnetic material 16 behind magnetic sensing element X2a or X2b. Nonmagnetic material 14 is then placed around main chip 12. Magnetic material 16 is magnetically charged in a direction parallel to a line drawn between magnetic material 16 and magnetic sensing element X2. This forms the magnet required by magnetic sensing element X2. The magnetic lines of flux leaving magnetic material 16 are then concentrated by magnetic material in close proximity to sensor 10. When longest tab 52 is directly in front of sensor 10, the magnetic lines of flux are more concentrated than when slot 48 is in front of sensor 10. These changes in magnetic flux concentration at magnetic sensing element X2 then cause the output of magnetic sensing element X2 to change proportional to the position of wheel 46.

Electromagnetic Sensing Element Operation

In FIGS. 4a and 4b are shown top and side views of sensor **54** with electromagnetic sensing element **X2** composed of MMwave chip **X2c**, ring converter **18**, antenna **A2**, and nonmagnetic material **14**. The electromagnetic sensor works by positioning an antenna that radiates radio frequency energy in close proximity to the wheel **46**. The radio frequency signal is shaped by the antenna, resulting in a narrow electromagnetic field that charges the surface of the wheel **46**. The wheel **46** surface charges with a thin layer of moving conductors because the radio frequency signal is of an extremely short wavelength compared to the distance from the surface of the wheel **46** to the ground point of the wheel **46**. At this frequency most of the electrical energy is concentrated in a thin layer on the surface of the wheel **46**.

The amount of energy contained on the surface of the wheel **46** as well as the distance between the wheel **46** and the antenna form a system of antenna and antenna element. The wheel **46** serves to change the impedance of the antenna system by allowing more or less energy to be transmitted by the antenna. This is done when the wheel **46** is placed in the near field of the antenna, the area closest to the antenna wherein the electric field of the antenna has a stronger component than the magnetic component of the field. Changing the distance between the antenna and the wheel **46** serves to modulate the impedance of the antenna as

the wheel **46** moves in the antenna's near field. The energy reflected from the antenna is therefore directly proportional to the distance to the wheel **46**. This energy is coupled from the antenna by a directional coupler, which is then connected to a detector. The reflected energy is then converted to an analog voltage directly proportional to the distance to the wheel **46**. In any range of wheel **46** size, shape, and range of movement, the impedance of the antenna can change from capacitive impedance to purely resistive impedance to inductive impedance or to any range between. The sensor position is adjusted to keep the antenna impedance in either the capacitive or in the inductive range to ensure that the output signal changes linearly with wheel **46** position.

MMWave chip **12** includes an oscillator **OS2** that generates radio frequency energy. Oscillator **OS2** may be any state-of-the-art millimeter wave oscillator; however, the preferred embodiment is an impact avalanche transit time diode (IMPATT) because it can be easily implemented in silicon and operates at a high frequency and temperature. Oscillator **OS2** may comprise several similar devices that are optimized to operate at radio frequencies through various temperature ranges. Oscillator **OS2** may also contain power circuits that automatically compensate for temperature or frequency drift in the output level of oscillator **OS2**. These various oscillators also may be automatically

switched into the circuit as the temperature changes. Examples of oscillator **OS2** may include transferred electron devices, IMPATT diodes, trapped plasma avalanche triggered transit time diode, tunnel diode, field effect transistor, bipolar transistor, high electron mobility transistor, or any other solid-state oscillator. Many examples of IMPATT oscillators achieved in monolithic circuits are well known in the art and are composed of IMPATT diodes produced in planar configuration and surrounded by monolithic ring inductor or other required element(s). Examples of how these IMPATT diodes are manufactured and designed are described in the chapter on "Millimeter Wave Silicon Devices" by P. Russer in Vacuum, Vol. 41, Nos. 4-6, pgs. 1033-37 (1990) published by Pergamon Press and references cited therein.

The power level of oscillator **OS2** is kept low (below 5 mW total power) to reduce heat generation and thereby increase the lifetime of the circuit components. The frequency of oscillator **OS2** is preferably in the range of 50-150 GHz and is selected such that the wavelength of the radio frequency energy emitted from antenna **A2** is less than or equal to the smallest distance across the face of a target, such as a wheel **46**, which has a slot **48** and a longest tab **52**.

MMWave chip **X2c** also includes directional coupler **DC2**. The radio frequency output signal is then passed through the output connection of directional

coupler **DC2** to antenna **A2** radiating toward the target **78**. Antenna **A2** is connected with conductive epoxy to directional coupler **DC2** through antenna pad **62**.

Antenna **A2** then transmits the radio frequency signal through a gap between antenna **A2** and wheel **46**. The radio frequency signal charges the surface of wheel **46**. The amount of energy contained in the reflected radio frequency signal depends on the composition of wheel **46** and on the distance between wheel **46** and antenna **A2**. It is preferable that wheel **46** have a surface that is electrically conductive. It is recognized that the impedance of antenna **A2** changes as a function of wheel **46** to antenna **A2** distance. The radio frequency signal is partially reflected from antenna **A2** back into the directional coupler **DC2**. Due to the directional nature of directional coupler **DC2**, the majority of this energy is not returned to oscillator **OS2** but is fed to signal detector **DT2**.

As shown in FIG. 2, signal detector **DT2** is followed by low-pass filter **C2**. The signal detector **DT2** rectifies the alternating voltage from the directional coupler **DC2** into a rectified voltage signal that is directly proportional to the distance from wheel **46** to antenna **A2**. Low-pass filter **C2** passes only the predetermined low-frequency signal that is proportional to the distance from wheel **46** to antenna **A2** and blocks the high-frequency radio signal from

oscillator **OS2**. The DC voltage signal is then passed to signal conditioner **S8**.

Note that MMWave chip **X2c** is shown as a separate chip from main chip **12**. These chips are connected through metal conductors **2a-2d** and **6a-6d** and integrated conductors **4a-4d** and **8a-8d**. The two chips are placed end-to-end and connected electrically with conductive epoxy.

Electromagnetic Sensor Installation

Referring now to FIG. 6, sensor **54** is inserted into the proximal end **244** of a rigid tube **24**. The distal end **242** of rigid tube **24** is closed with a ceramic cap **64**, which is brazed to the end of rigid tube **24**, forming a hermetic connection. In this fashion all sensor components **54** are shielded from contamination that may be present in the sensing environment. Ceramic cap **64** is transparent to microwave and millimeter-wave signals.

Rigid tube **24** is molded into sensor connector **44** body. Output wire **58** and ground wire **60** (FIG. 4a) are connected to sensor connector **44** blades (not visible) in the sensor connector **44** body, preferably by using welding techniques known in the art. Spiral barbs **32** are formed during the molding process about the upper end portion of rigid tube **24** such that they constitute an integral part of sensor connector **44** body. A cylindrical section **26** is formed during the molding process between spiral barbs **32** and the sensor

connector 44 body. Molding compound also enters rigid tube 24 and secures sensor 54. A flexible plug 28 made from synthetic rubber or any resilient material has an outer diameter 284 dimensioned to form a seal with a simple aperture 40 through the housing wall 38 in a position to sense the moving wheel 46.

Sensor 54 is installed as follows: First a simple aperture 40 is drilled into housing wall 38. Into this aperture 40 flexible plug 28 is inserted to the point that its shoulder 42 bears against housing wall 38. At the end of the portion of flexible plug 28 that is to be inserted into housing wall 38, there is located a conical section 34 with a small shoulder 36. Conical section 34 is arranged such that after the insertion of flexible plug 28 the small shoulder 36 expands diametrically beyond the hole diameter in housing wall 38 thus arresting flexible plug 28 in the hole and preventing it from being pulled out.

After flexible plug 28 has been inserted into the hole, the entire sensor assembly is inserted into central aperture 30 in flexible plug 28 so that antenna A2 is positioned adjacent ceramic cup distal tip 642 and so that the sensor connector body proximal section is sealingly positioned against the proximal face 282 of the plug 28. The diameter of central aperture 30 in flexible plug 28 is selected such that the sides of central aperture 30 interfere with spiral barbs 32 and cylindrical section 26 of sensor 54. This interference

expands flexible plug **28** when sensor **54** is inserted and thus secures flexible plug **28** and the sensor assembly in aperture **40** of housing wall **38**. The above insertion process seals aperture **40** against fluids that may be present in the sensing environment from leaking through housing wall **38**, and against contamination that may be present externally. To enhance the seal between flexible plug **28** and sensor **54**, cylindrical section **26** is provided so that any fluids that may enter between flexible plug **28** and spiral barbs **32** cannot leak through simple aperture **40**.

While sensor **54** can be installed by simply inserting it into simple aperture **40** of flexible plug **28**, it cannot be removed in the same fashion due to spiral barbs **32**; instead sensor **54** has to be removed by unscrewing it, thus providing safety against accidental pullout.

This concludes the description of the preferred embodiments. A reading by those skilled in the art will bring to mind various changes without departing from the spirit and scope of the invention. It is intended, however, that the invention only be limited by the following appended claims.

What Is Claimed Is:

1. A system for sensing proximity or position of a movable target having a magnetic flux and a surface having a high region and a low region, the system having radio frequency producing means for producing radio frequency energy and being characterized by:

sensing means for sensing the magnetic flux density emitted by a region of the target surface positioned opposite the sensing means;

translating means responsive to said sensing means for translating the sensed magnetic flux density into a position signal representative of a range of positions between a reference point and a moving target;

comparing means responsive to said translating means for comparing the position signal with a predetermined high and a predetermined low reference signal corresponding, respectively, to the position signal generated when the high surface region and the low surface region are positioned opposite the sensing means, said comparing means including maximum and minimum generating means responsive to said sensing means for generating a maximum distance range voltage signal representative of a maximum distance range value between a reference point and a moving target and for generating a minimum distance range voltage signal representative of a minimum distance range value between a reference point and a moving target and storing means responsive to the maximum distance range signal and the minimum distance range signal for storing the maximum and minimum distance range voltage signals during a predetermined time period; and

determining means responsive to said comparing means for determining the target position from the comparison of the position signal with the high and the low reference signal, said determining

AUSTRALIAN PATENT OFFICE

AMENDED SHEET

means including range value generating means responsive to said storing means for generating a range value signal having an amplitude representative of a range value between the maximum distance range value and the minimum distance range value and output generating means responsive to the range value signal for generating an output position signal representative of the distance between a reference point and a moving target when the amplitude of the range value signal exceeds a predetermined threshold.

2. The system as defined in Claim 1, further comprising threshold generating means responsive to said storing means for generating a threshold signal having a voltage level with amplitude corresponding to the approximate mid-point between said maximum distance range signal value and said minimum distance range signal value, and wherein said output generating means generates an output signal having a first predetermined voltage level when the amplitude of the range value signal exceeds the amplitude of the threshold signal, and having a second predetermined voltage level when the amplitude of the first signal is less than the amplitude of the threshold signal.

3. The system as defined in Claim 1 or 2, wherein the sensing means and the comparing means are elements of a unitary integrated circuit for improving reliability and are positioned so as to have a generally right angle therebetween to thereby minimize a surface area of the sensing means in a plane facing the moving target.

4. The system as defined in Claim 3, wherein the integrated circuit comprises a housing having a first side generally facing the moving target and a generally opposite second side, and further

AUSTRALIAN PATENT OFFICE

comprising a nonmagnetic material affixed so as to surround the first side of the housing and a magnetic material positioned adjacent the second side of the housing, the magnetic material magnetically charged in a direction parallel to a line between the magnetic material and the sensing means, and wherein magnetic lines of flux from the magnetic material are concentrated by the magnetic flux of the target.

5. The system as defined in Claim 1, 2, 3, or 4, further comprising directional antenna means having an impedance and being connected to the radio frequency producing means for radiating the radio frequency energy toward a region of the target surface opposite the antenna means to thereby charge the target surface, the target surface changing the impedance of the antenna means when the target surface is in a near field of the antenna means, and wherein said sensing means is responsive to said antenna means for sensing a value of the antenna means impedance.

6. The system as defined in Claim 5, wherein the sensing means comprises a directional coupler and a signal detector connected to the directional coupler.

7. The system recited in Claim 5 or 6, wherein the sensing means senses an impedance change responsive to sensing an amplitude of radio frequency energy reflected from the target.

8. The system recited in Claim 5, 6, or 7, further comprising means for installing the antenna means into a housing wall having an aperture, the housing wall generally adjacent the target.

AUSTRALIAN PATENT OFFICE

9. The system recited in Claim 8, wherein the installing means comprises:

a tube positioned in surrounding relation to the antenna means, the tube having an open distal end and an open proximal end;

a ceramic cap sealingly affixed to the tube distal end, the ceramic cap transparent to microwave and millimeter-wave energy;

a sensor connector body affixed to the tube proximal end, the sensor connector body having:

a distal barbed section; and

a proximal section dimensioned larger than the distal section; and

a flexible plug having an outer diameter dimensioned to form a seal with the housing wall aperture when inserted therein and an aperture therethrough dimensioned to sealingly surround the sensor connector body barbed section when the barbed section is inserted therein;

wherein, in use, the flexible plug is inserted into the housing wall aperture, the antenna means is inserted into the tube proximal end sufficiently far so as to generally reach a distal tip of the ceramic cap, the ceramic cap and the rigid tube are inserted through the plug aperture, the sensor connector body barbed section is inserted into the plug aperture sufficiently far that the sensor connector body proximal section is sealingly positioned against a proximal face of the plug, the sensor connector body proximal section remaining on a proximal side of the housing wall.

10. The system as defined in Claim 1 or 2, wherein said range value generating means changes the maximum distance range signal when the range value signal amplitude exceeds the maximum distance range signal amplitude, wherein said range value generating

AUSTRALIAN PATENT OFFICE

means changes the minimum distance range signal when the amplitude of the range value signal is less than the minimum distance range signal amplitude, and wherein the output signal changes responsive to the amplitude of the range value signal falling below the predetermined threshold.

11. The system as defined in Claim 1 or 2, wherein said translating means further comprises filtering means responsive to said sensing means for electronically filtering the reflected radio frequency signal and for passing a filtered signal at a predetermined frequency having an amplitude that varies with an amplitude of the reflected radio frequency signal.

12. The system as defined in Claim 1 or 2, wherein said sensing means senses changes in the resistance component of the impedance, and wherein the distance signal indicates that the position of the moving target has changed responsive to the changes in the resistance component of the impedance being sensed.

13. A method for sensing proximity or position of a target, the method comprising the steps of:

radiating radio frequency energy with an antenna having an impedance;

moving the target sufficiently adjacent the antenna so that the antenna impedance varies with a change in the target position as a result of a near-field effect;

detecting the change in the antenna impedance in response to the changes in the target position;

translating the detected change in the antenna means impedance into a position signal;

AUSTRALIAN PATENT OFFICE

comparing the position signal respectively with a reference signal corresponding to the position signal generated when the target is positioned within a predetermined range of the antenna; and

determining the target position from the comparison of the position signal with the reference signal.

14. The method recited in Claim 13, further comprising the steps of:

generating the reference signal representing an average maximum movement of the target, and wherein the determining step includes the step of providing a signal indicating the target has reached a predetermined distance when the position signal reaches a predetermined level with respect to the maximum movement reference signal.

15. A system for sensing proximity or position of a moveable target substantially as herein described with reference to the accompanying drawings.

16. A method for sensing proximity or position of a moveable target substantially as herein described with reference to the accompanying drawings.

Dated this 8th day of December 1998

Peter U Wolff and Marshall E Smith, Jr

By their Patent Attorneys
GRIFFITH HACK

AUSTRALIAN PATENT OFFICE

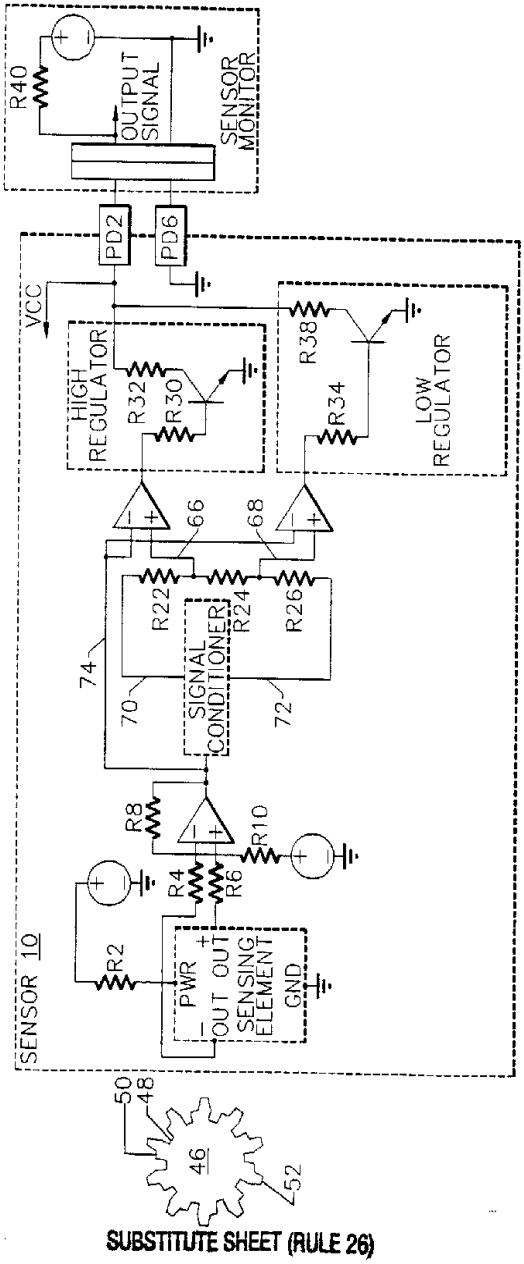
R40
OUTPUT SIGNAL
SENSOR MONITOR
PD2
PD6
VCC
HIGH REGULATOR
R32
R30
R38
R34
LOW REGULATOR
66
68
R22
R24
R26
SIGNAL CONDITIONER
74
70
72
R8
R10
R4
R6
R2
PWR
OUT
OUT
SENSING ELEMENT
GND
SENSOR 10
50
48
46
52

FIG. 1.

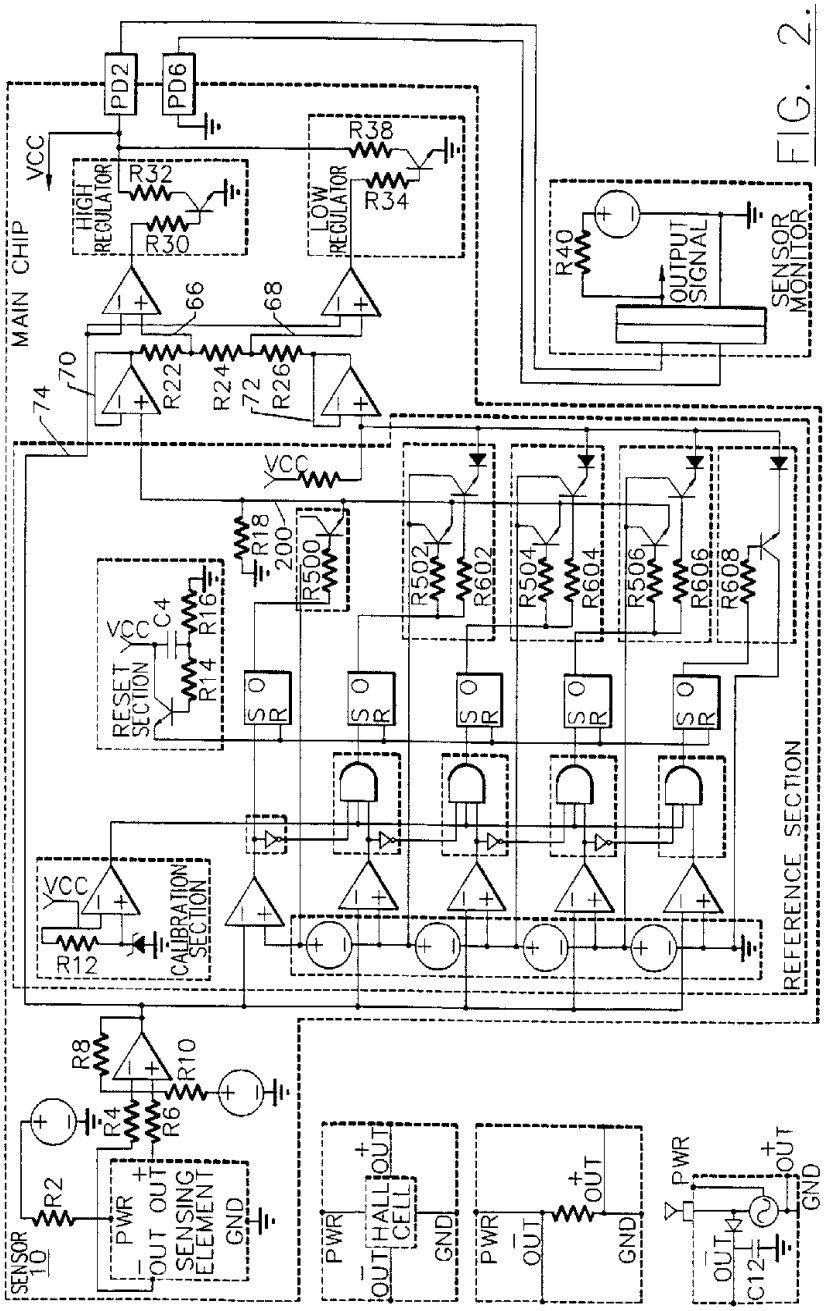
MAIN CHIP
VCC
PD2
PD6
HIGH REGULATOR
R32
R30
LOW REGULATOR
R38
R34
R40
OUTPUT SIGNAL
SENSOR MONITOR
66
68
70
72
74
R22
R24
R26
R18
200
R500
R502
R602
R504
R604
R506
R606
R608
RESET SECTION
C4
R16
R14
S
O
R
REFERENCE SECTION
CALIBRATION SECTION
R12
R8
R10
R4
R6
R2
SENSOR 10
PWR
OUT
SENSING ELEMENT
GND
HALL CELL
C12

FIG. 2.

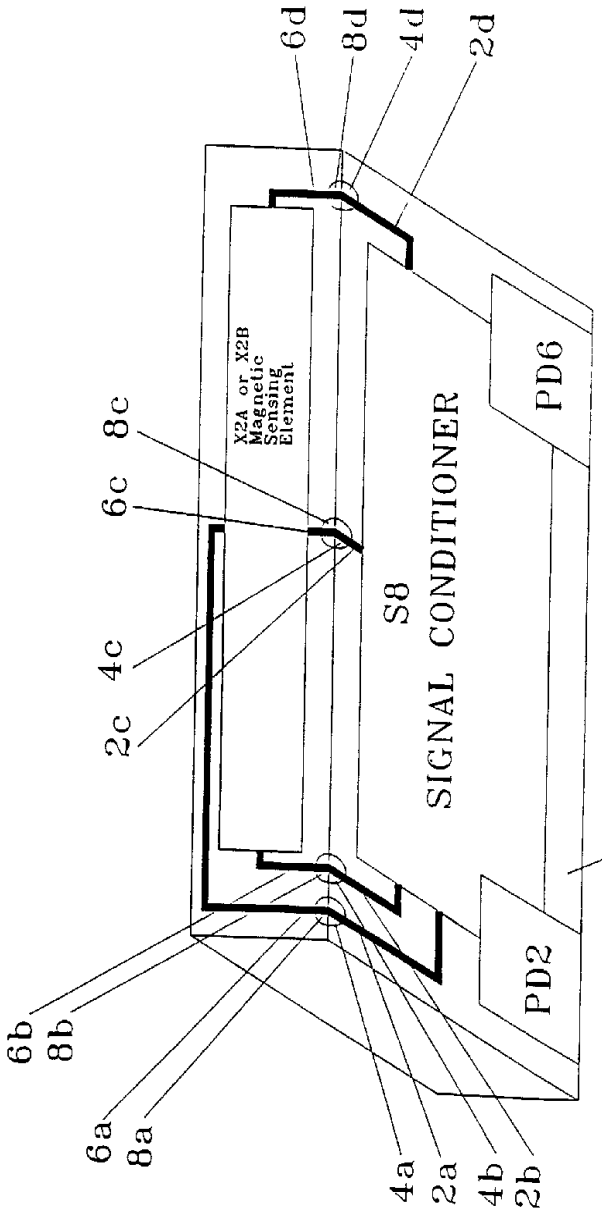

FIG. 3 SENSOR CHIP WITH ORTHOGONAL SENSING ELEMENT

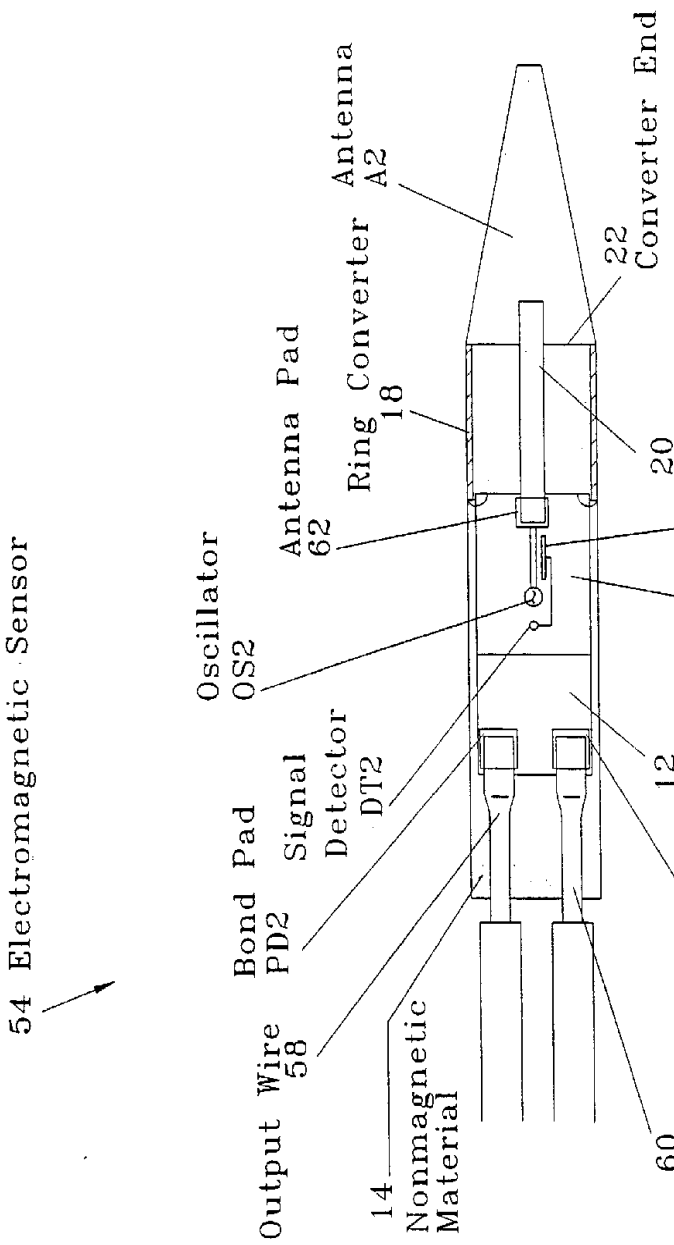

FIG. 4A ELECTROMAGNETIC SENSOR TOP VIEW

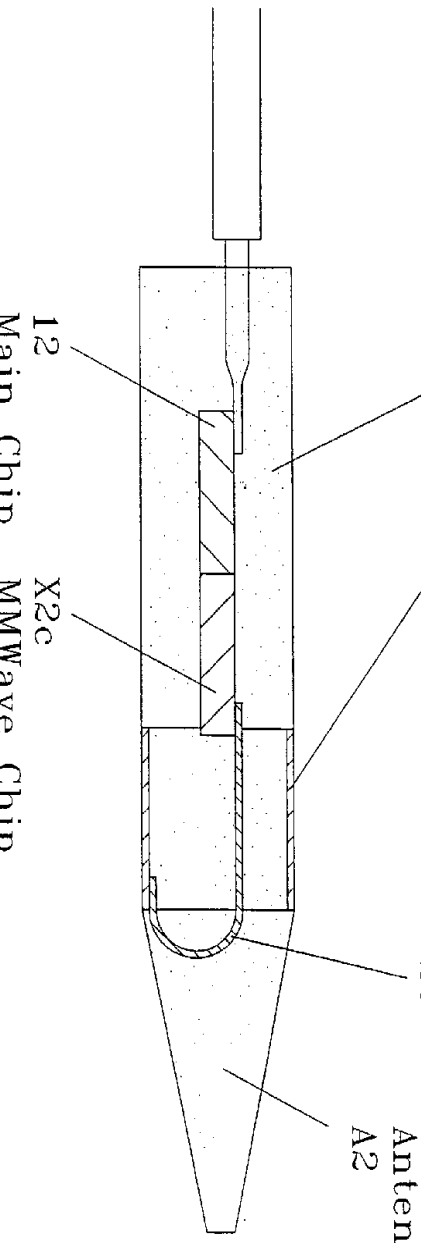

FIG. 4B ELECTROMAGNETIC SENSOR SIDE VIEW

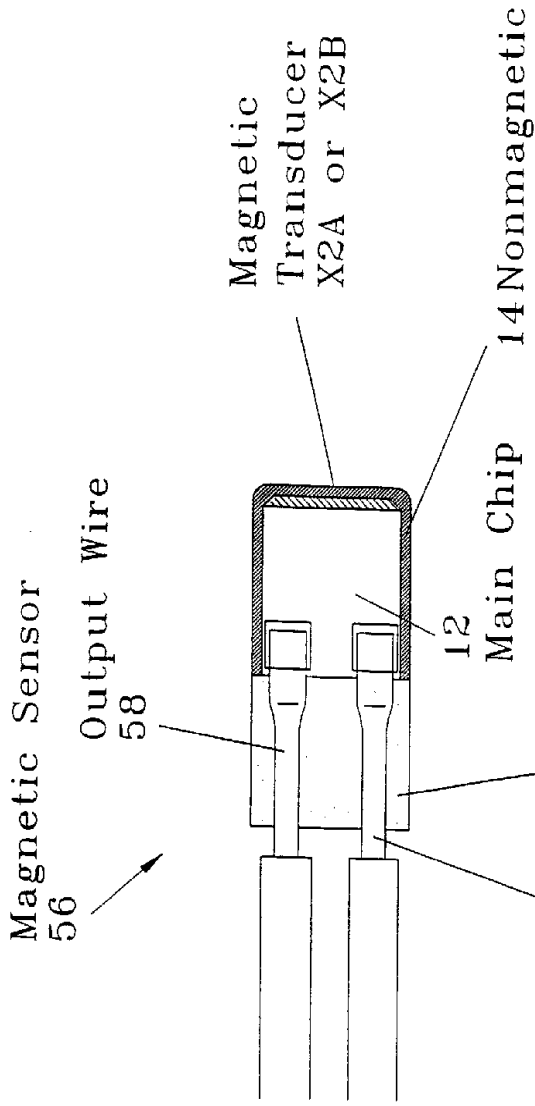

FIG. 5 MAGNETIC SENSOR TOP VIEW

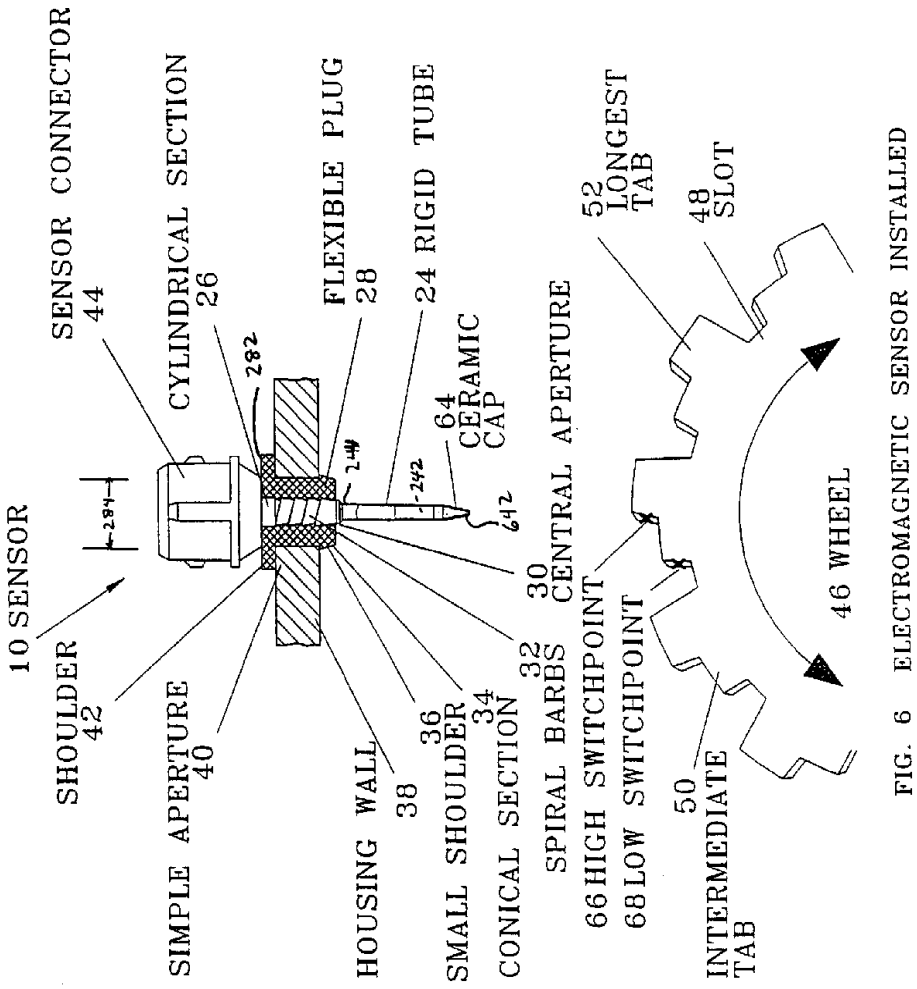

FIG. 6 ELECTROMAGNETIC SENSOR INSTALLED