US 20070284077A1

(19) United States

(12) Patent Application Publication

Gravina

(10) Pub. No.: US 2007/0284077 A1

(43) Pub. Date: Dec. 13, 2007

(54) SMART SOLAR ROOF

(75) Inventor: **Matteo Bonifacio Gravina**, Laredo, TX (US)

Correspondence Address:
MATTEO B. GRAVINA
5835 LONGORIA LOOP
LAREDO, TX 78041

(73) Assignee: **Matteo B. Gravina**, Laredo, TX (US)

(21) Appl. No.: **11/420,783**

(22) Filed: **May 29, 2006**

Publication Classification

(51) **Int. Cl.**
F25B 29/00 (2006.01)

(52) **U.S. Cl.** **165/48.2**

(57) **ABSTRACT**

A heat pump use for expelling solar thermal energy by electromechanically transferring heat to a major component and continuously expels it from an upper level of a static structure. The invention receives and transfer solar thermal energy between two metal sheets that restricts heat and by means of airflow heat energy is transfer to a condensing unit. Solar energy is thereby expelled out into the ambient conventionally by means of airflow from a condensing unit draining system.

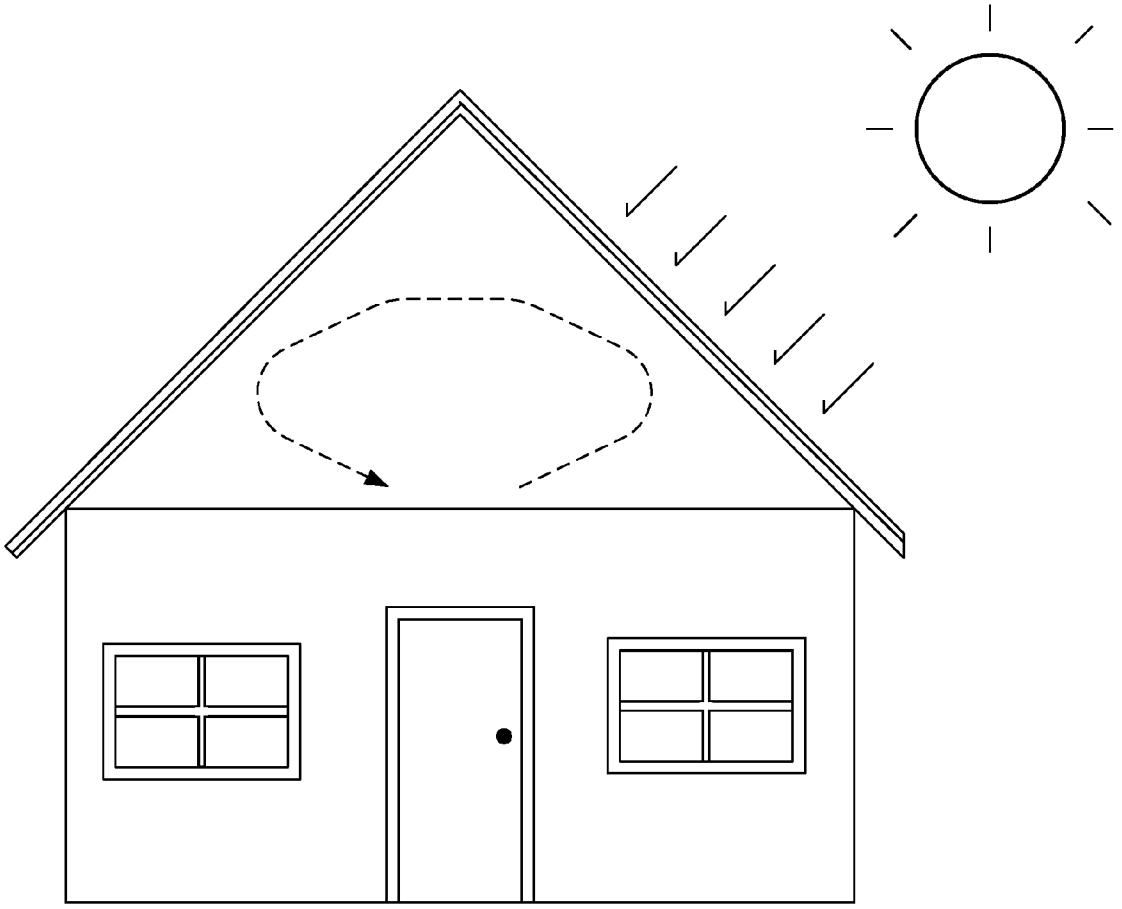

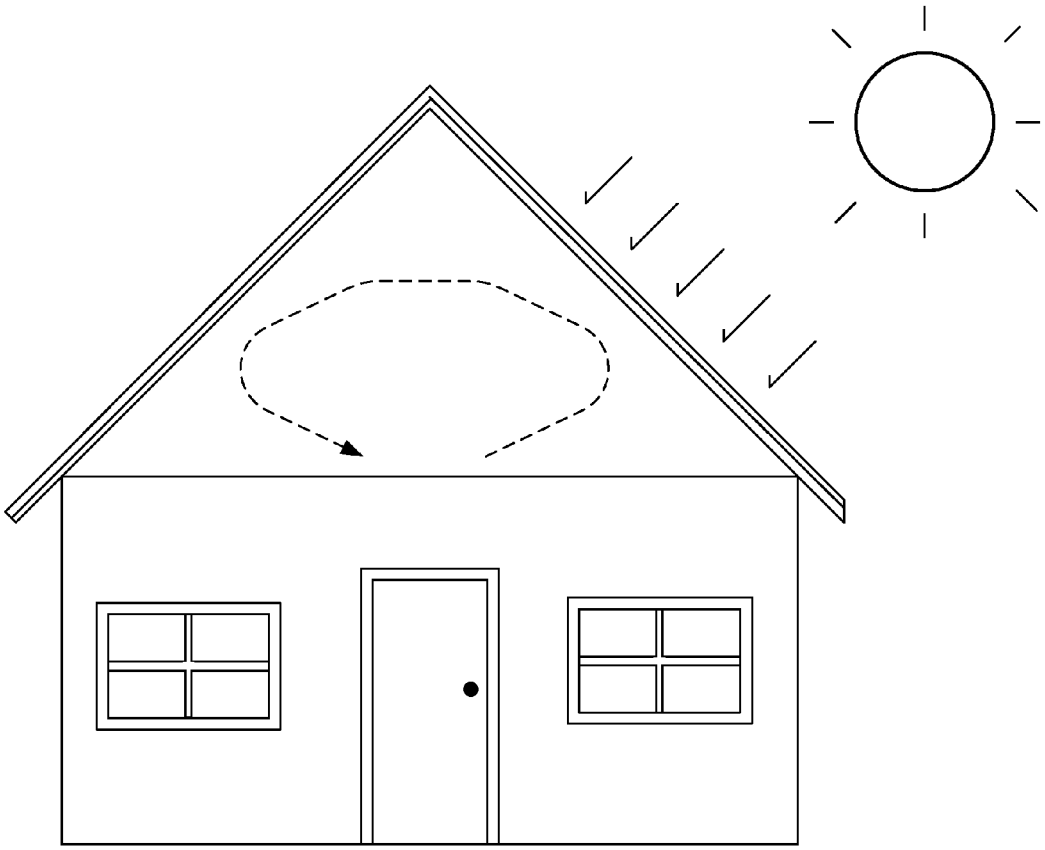

Fig 1

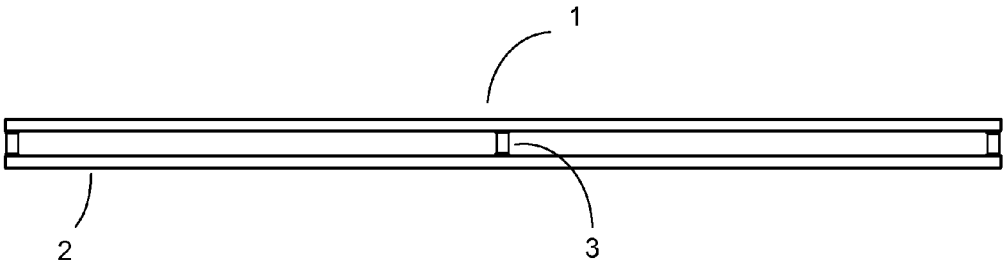

Fig 2

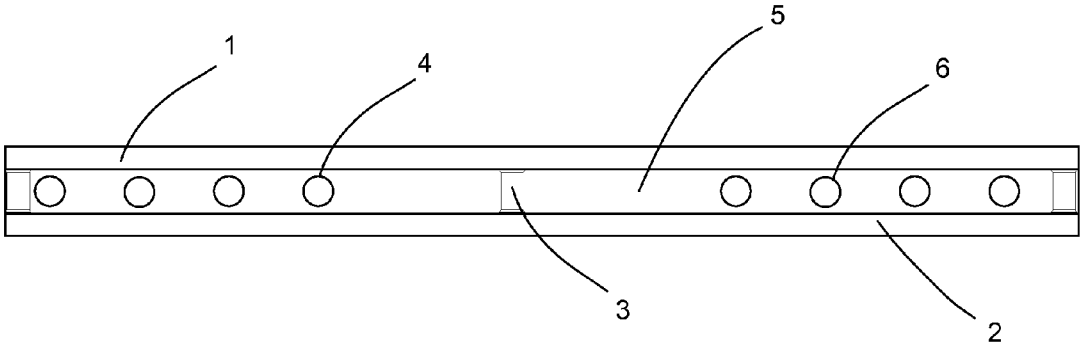

Fig 3

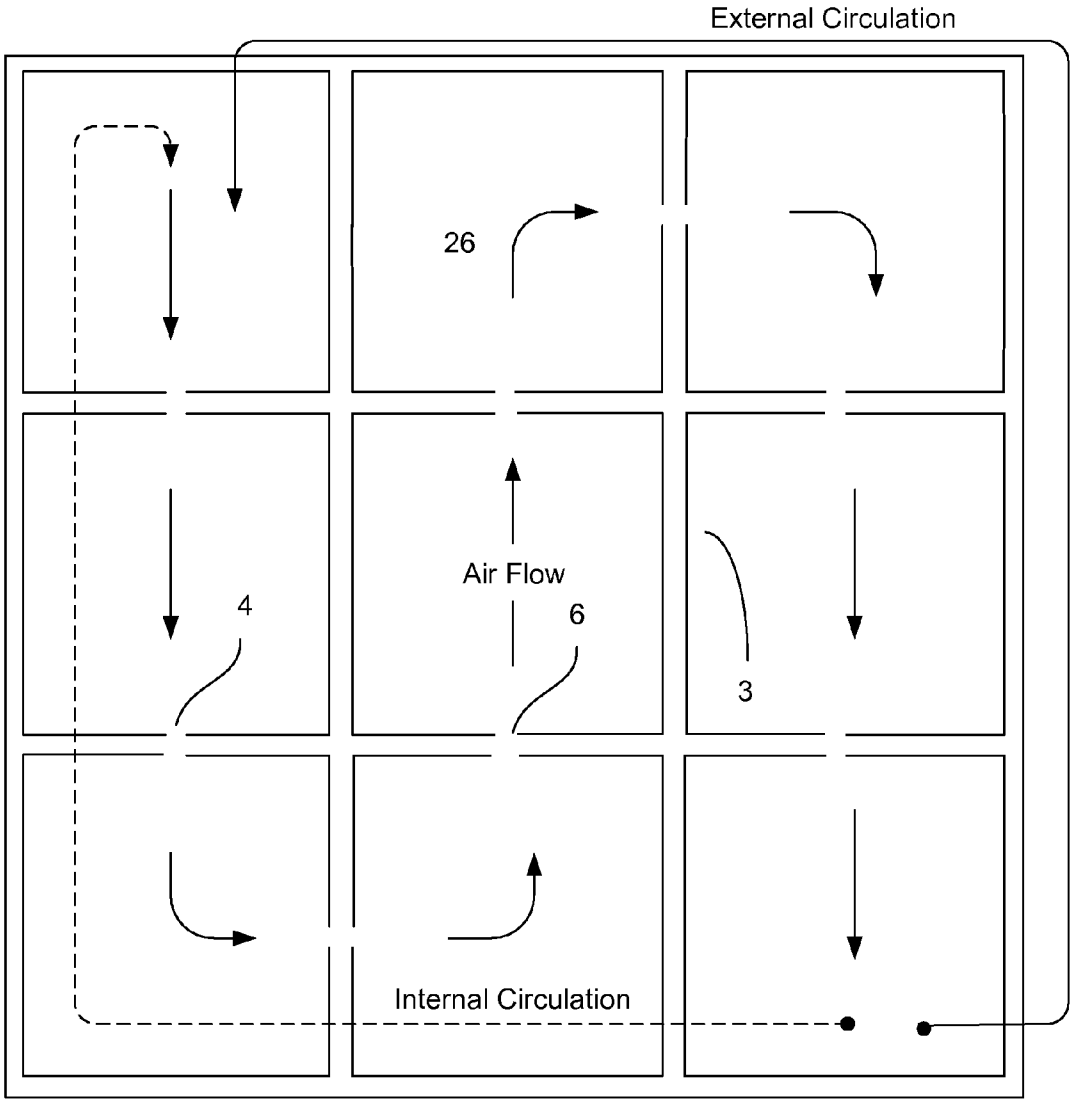
External Circulation
26
Air Flow
4
6
3
Internal Circulation

Fig 4

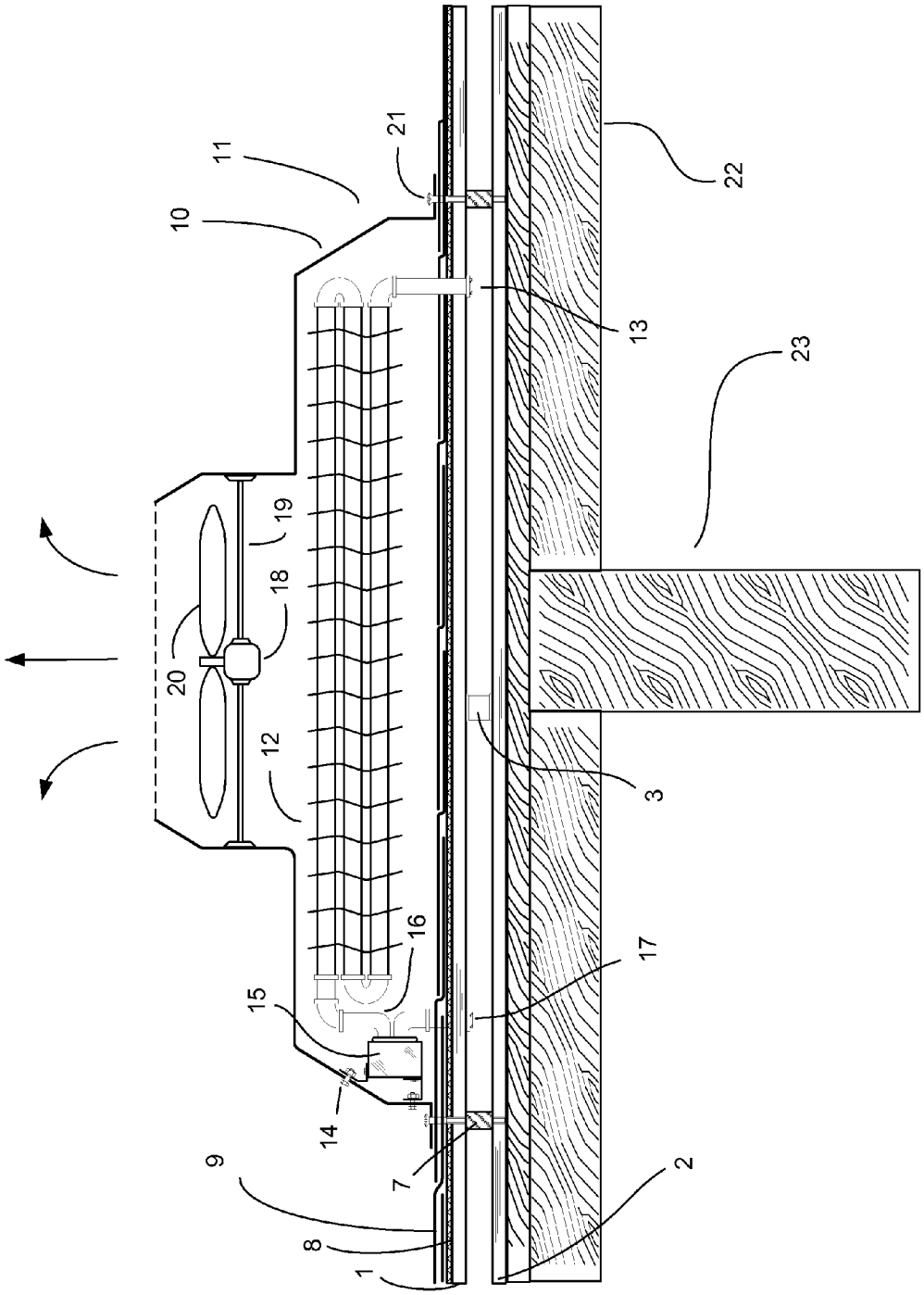

Fig 5

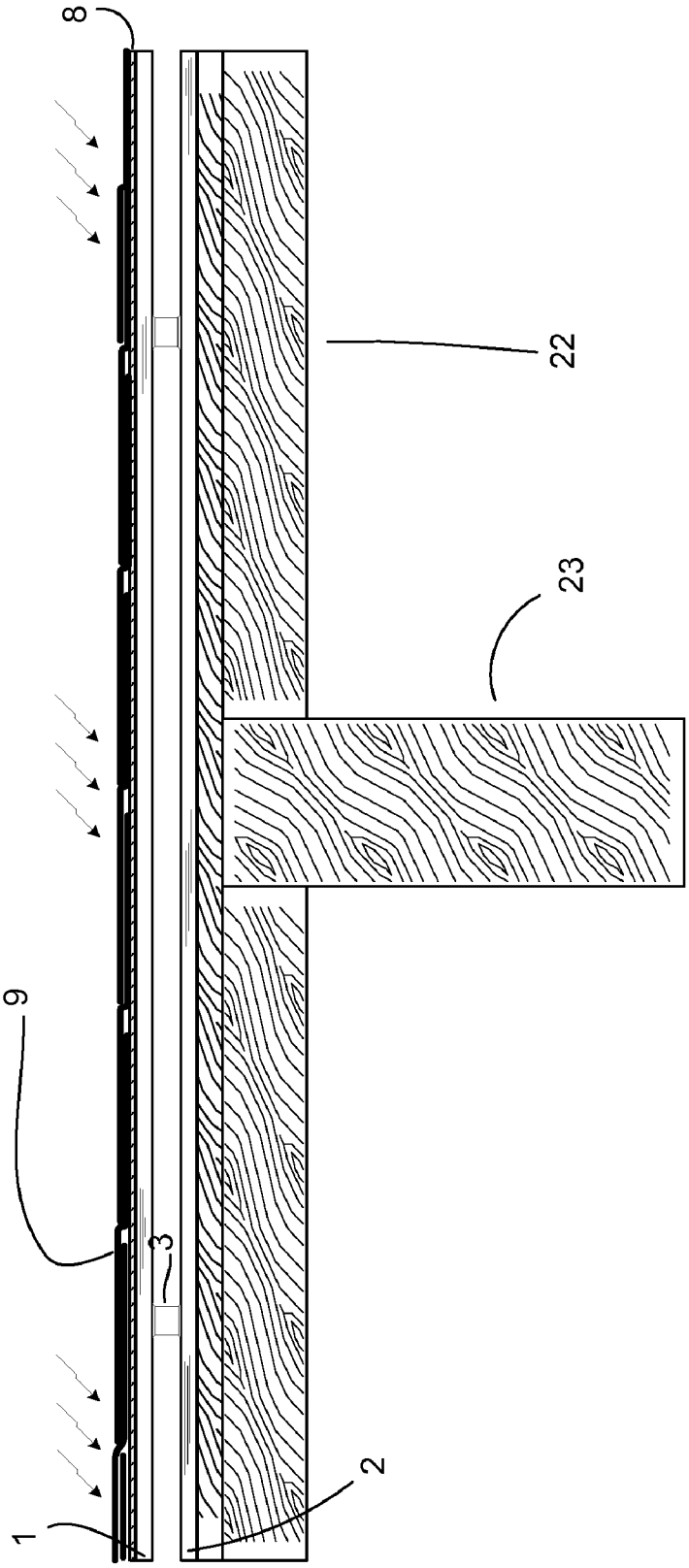

Fig 6

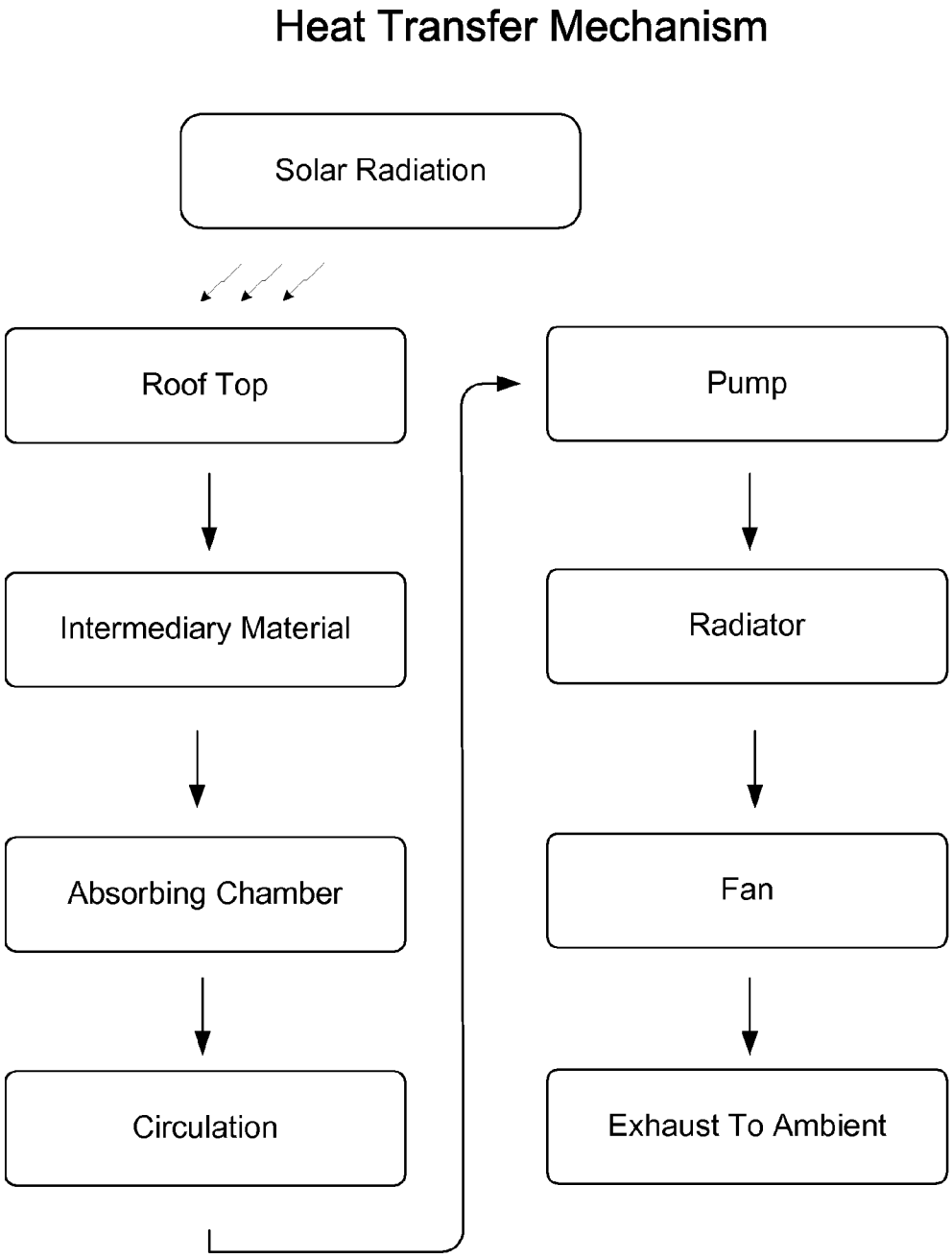
Heat Transfer Mechanism
Solar Radiation
Roof Top
Intermediary Material
Absorbing Chamber
Circulation
Pump
Radiator
Fan
Exhaust To Ambient

Fig 7

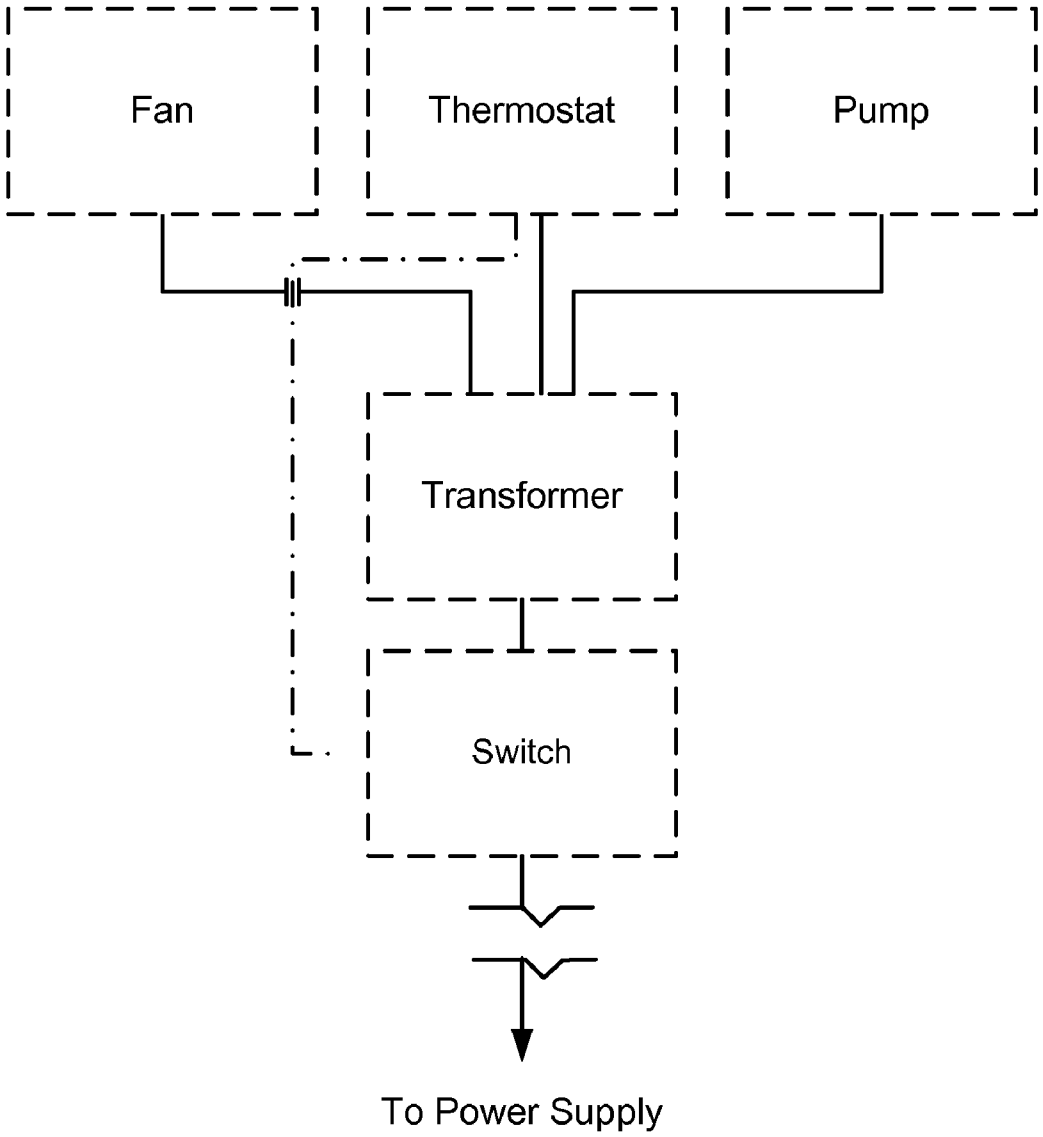

Fig 8

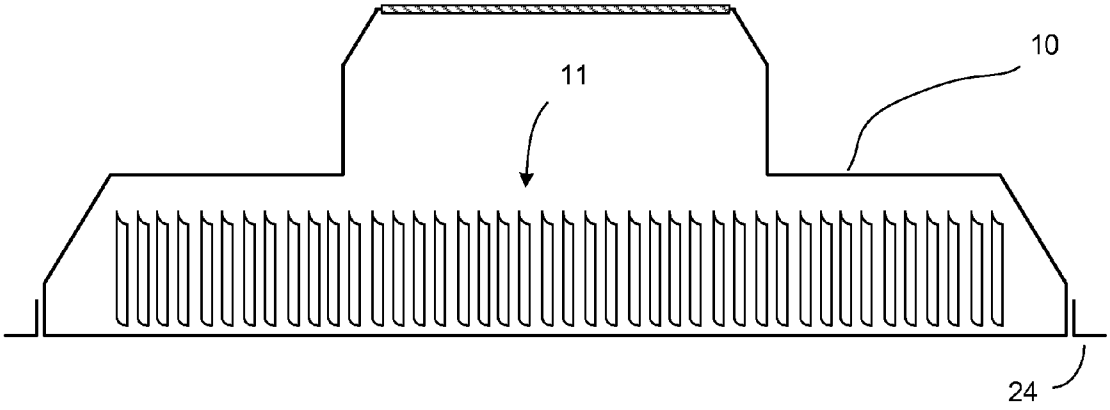

Fig 9

SMART SOLAR ROOF

FIELD OF THE INVENTION

[0001] The present invention relates to energy preservation roofs, particularly to an invention for the preservation and the efficient use of energy. A hybrid between two types of devices, it is first an energy cooling system that retransfers solar radiation, and secondly it ventilates this energy.

BACKGROUND OF THE INVENTION

[0002] Inventions for practical conservation and use of energy are known in the roof industry. The roof industry has come up with elaborate designs and materials that help a building unit use less cooling or heating energy. Other devices that brought to the forefront are passives solar, and active solar devices that make use of solar radiation.

[0003] The traditional uses of air conditioning for residential and commercial units are the use of ceiling fans, heat pumps, and window units. Outside the house ventilation equipment reduce the amount of heat energy entering a unit. The applications of ventilation fans help reduce the amount of solar energy heat entering a building by transferring it back to the ambient. This mechanism does work for many residential and commercial units, but does come short of working in every geographical area. It also falls short of completely expelling all the heat energy completely because it only sends heated air that it is able to capture. This scheme does not filter out the air on corners or crevasses.

[0004] Another traditional device employ for the expedition of unwanted heated air is a bladed turbine. This device is strategically located on top of the roof. It is rooted within the inner area of the roof, and the ventilation turbine place above the roof skin. This methodology of using a wind turbine is practical as long as there is wind for making the turbine blades rotate. In U.S. Pat. No. 5,452,710 by Palmer explains on such method. This mechanism also helps reduce the amount of heat energy within a rooftop and rooms inside a unit. This type of device fails to vent all the heated air properly by only grasping air that the turbine can reach. It also fails by only working when wind is blowing. If no wind is blowing, the turbine will simply not rotate. This creates a bubble of heated air inside a roof. Another failure in part by this method is the rotation of the turbine when heated air is wanted. This is when the climate of a region is cold and the measurable amount of air inside a roof is needed as a carpeting effect against the outside air. By ventilating the warm air within to the outside, it also brings unwanted cold air into the roof, making this device useless half of the time.

[0005] Still other methods use in the reduction of solar energy for cooling. Material uses for these purposes are employed by using improve compositions of materials such as alternative stone in roof shingles, for example to U.S. Pat. No. 4,279,244 to McAlister or using sprinkler type system as in U.S. Pat. No. 6,732,951 to Salazar et al to repel unwanted radiation. Other methods are the use of aluminum chips such is the case for U.S. Pat. No. 4,617,198 to Overturf making use of the reflective qualities of aluminum for expelling incoming solar radiation. Although all methods are practical and do work under certain conditions, not one of them would work under all climatic and weather conditions. Furthermore, the geographical locations of modern life make some of these methods impractical.

[0006] In addition to ventilation devices and material use, passive and active solar systems are also utilized. These schemes are use in making use of solar radiation for lighting in the inner places of a building, also for making use of the heat content for various purposes. Primarily they fall into two types of systems, they are Photovoltaic and solar thermal collectors. Photovoltaic are for converting solar radiation to electrical energy by means of using semiconductors. This form although very attractive for number of reasons, it falls short of efficiency.

[0007] The overall efficiency of any type of Photovoltaic is very low; no panel is able to have efficiency above thirty percent in the market. On the other hand, solar thermal collectors do have a higher efficiency than Photovoltaic, but they also fall short when location is a factor. Such is the case where photovoltaic efficiency is limited are in U.S. Pat. No. 6,501,013 to PowerLight Corporation, and U.S. patent and U.S. Pat. No. 6,495,750 to PowerLight Corporation. These two types of systems although do serve a simple task, they do lack in efficiency and attractiveness. Many consumers find any obscure or alteration of their roof awkward. Even though, if making Photovoltaic and solar thermal collectors with an efficiency higher than fifty percent, segments of the general public would not want an alteration of their home.

SUMMARY OF THE INVENTION

[0008] The present invention is a hybrid between two known inventions. The Invention is part ventilation and a solar energy utilization system. The simple means of concentrating heated incoming air and transferring to a cooling unit makes this system a ventilation device. On the other hand, the task of using solar energy and making use of it makes of the Invention also a solar thermal collector.

[0009] The advantage of the invention is its high rate of energy for use as potential energy. The high efficiency rate is an objective of the innovation, and that is to expel heat accumulated back to the ambient. The efficiency is superior to photovoltaic and solar concentrators. The ratio of the electrical energy consume to the rate of solar thermal energy it expels is over ten times for warm and hot climates.

[0010] An advantage is the energy it uses to the energy it produces. The practical application of the Invention is a two added energy innovation. Its heat absorption can be use to expel excess heat accumulated by roofs and roof attic. In addition, the use of heat as energy for several purposes can alleviate or reduce electricity or energy use by residential or commercial unit.

[0011] An advantage is the use of heat as energy. The use of capture heat in a control environment permits the user of this invention to use the energy content to heat water. In commercial use the heat can be utilize to heat water, ovens, or materials. When use as a solar energy collector the energy gain can be use for water heating in boilers, pool heating, or in industrial operations.

[0012] An advantage is the extra space accommodation it provides. By controlling the amount of heat a roof receives, an architect can also add additional space of a residential or commercial unit. The inner height of a roof can be elevated to accommodate extra space or produce additional cubic capacity.

[0013] A major advantage that is the most important factor is the invention is socially acceptable. The use of solar thermal concentrators that absorb the heat from the sun, and/or air, and sends it back, or makes use of it is acceptable.

The unique way of expediting the overall process is socially acceptable because of the way it works. The process of working under the skin of a roof, without giving it an awkward view, makes this invention very attractive to home or commercial buyers of roofs.

[0014] An improvement of the invention over flat plate collector is wherein the ability to a) work under the skin of the outer envelope (roof shingle) hidden away from public view, and b) work from all angle as long as solar radiation is heating said roof, and 3) work without any interference from invention components.

[0015] An improvement of the invention over concentrating collector wherein the ability to a) work under the skin of the outer envelope roof shingle hidden away from public view, and b) work from all angles as long as solar radiation is heating said roof, and 3) work without any interference from said invention components.

[0016] An improvement of the invention over transpired air collector wherein the ability to a) work under the skin of the outer envelope roof shingle hidden away from public view, and b) work from all angles as long as solar radiation is heating said roof, and 3) work without any interference from said invention components.

[0017] The current embodiment of the present invention presented in a form for a typical residential unit; intended only as an expression of a diverse embodiment for residential, commercial, and industrial applications.

DETAILED DESCRIPTION OF THE INVENTION

[0018] In the embodiment shown in FIG. **1**, the invention shown as an expression how a typical housing unit circulates unwanted heated air inside a typical roof. Typical of housing units most of the air circulates and encapsulates by the incoming radiation. This circulation of heated air increases dramatically a heat bubble within.

[0019] FIG. **2** illustrates a bi-level frame constructed below the roof top material. The illustration shows how the upper level metal sheet (**1**) would receive the incoming radiation by conduction to the inside into its conduit of which it would be supported by inner supporting column (**3**) which are themselves supported by the lower level metal sheet (**2**).

[0020] FIG. **3** illustrates a cross section view between the upper metal sheet (**1**) and the lower metal sheet (**2**) with a view of an intersecting rail (**5**) with pump-to-chamber perforations (**4**) that allow for a continual flow of air through the chambers. The inner supporting columns (**3**) restrict free flow of air thus only permitting the air to circulate the chambers and through the cross sectional chamber-to-condenser perforation (**6**) only. Air movement passes only through the intersecting rail (**5**) which also serves for sustaining the weight of the upper metal sheet (**1**) and roof top materials.

[0021] FIG. **4** is a diagram of how free flowing air circulates within the chambers. Top view of diagram shows air movement through every cubical air chamber (**26**) finalizing back to the condensing unit (**10**). From the condensing unit (**10**) the air would then recycle again through internal or external pump method. Airflow may only pass through pump-to-chamber perforations (**4**) and continue through chamber-to-condenser perforation (**6**). The intersecting rail (**5**) and the inner supporting columns (**3**) restrict airflow movement.

[0022] In FIG. **5** the pump air would come about by the force of an air pump (**15**). This air would come directly from condensing coil (**12**). Movement of air first would travel through each cubical air chamber (**26**) as it passes through the pump-to-chamber perforations (**4**) through the chamber-to-condenser perforation (**6**) and unto the condensing unit air inlet (**13**). From their the air pump (**15**) suctions the incoming cooled air and receives it by means of an coil-to-pump conduit (**16**) from the eventual condensing coil (**12**) where the heat energy accumulated is condensed. As the heat energy heats the condensing coil (**12**) the fan blade (**20**) vents the air out to the ambient. The blowing fan blade (**20**) suctions air in the condensing unit (**10**) through condensing unit opening (**11**) in the condensing unit housing. As the force air in, it passes through the heated condensing coils (**12**) that are then cooled down by the air that passes through it. The cooled air is then recycled back to the first cubical air chamber (**26**) by the pump-to-cubical air chamber conduit (**17**). This process is repeated until the thermostat or until the electrical switch turns off the whole system.

[0023] As shown is FIG. **5**, various components help make the condensing unit (**10**) a complete system. The condensing unit (**10**) locked into the roof by means of condensing unit screws (**21**) that locked by means of supporting columns (**7**). Other supporting devices are use to lock the air pump (**15**) in place for example the screws (**14**) that retain the air pump (**15**) in position. This is the same effect created by the supporting beams (**19**) that maintains the fan motor (**18**) and fan blade (**20**) in proper position. The metallic conduits that constitute the Invention seat on top of the roof supported by cross roof support frame (**22**) and the vertical roof column (**23**).

[0024] In FIG. **6** is a cross sectional view of the Invention shown with incoming solar radiation hitting its uppermost layer, the roof shingles (**9**). The radiation passes through the roof asphalt (**8**) by means of conduction and into the cubical air chamber (**26**) by means of convection by the upper metal sheet (**1**). Separating the upper metal sheet (**1**) on top of the lower metal sheet (**2**) are the inner columns (**3**). Natural roof support frame (**22**) and the adjacent roof column (**23**) support the outer rooftop and the Invention. FIG. **7** is a schematic diagram of how the whole system operates. FIG. **8** is a schematic diagram of power applied to the invention.

[0025] Last in FIG. **9**, the condensing unit (**10**) illustrates the mechanical housing. At the bottom sides are the condensing unit brackets (**24**) that hold the condensing unit (**10**) on top of the roof. At its sides the condensing unit (**10**) has condensing unit opening (**11**) where air is force in and out through the condensing unit air outlet (**13**) and to the ambient surroundings.

BRIEF DESCRIPTION OF DRAWINGS

[0026] The present invention is illustrated by way of example and not limited in the figures of the accompanying drawing, in which:

[0027] FIG. **1** is a schematic illustration of a static structure illustrating solar energy radiation.

[0028] FIG. **2** is a schematic illustration of the two-layer metals sandwich between the conduit segregation columns.

[0029] FIG. **3** is a schematic illustration of two-layer metals sandwich between the conduit segregation columns and conduit separator with airflow perforations.

[0030] FIG. **4** is a schematic illustration of airflow inside the conduits by internal or external recirculation.

[0031] FIG. **5** is a schematic illustration of the condensing unit.

[0032] FIG. **6** is a schematic illustration of the airflow conduit place on a roof.

[0033] FIG. **7** is a schematic illustration of how heat is transfer through system.

[0034] FIG. **8** is a schematic illustration of the electrical diagram.

[0035] FIG. **9** is a schematic illustration of the condensing unit housing.

What is claimed is:

1. A hybrid system composed of a solar thermal energy content accumulator and a ventilator of concentrated thermal energy. An energy radiation absorber on a roof of a building for receiving solar radiation for absorbing a high degree of energy content. The design is constructed for proper thermal emissions which includes:

a bi-level metal sheet place one on top of another as to constrict heat energy. Metal panels place in perpendicular to each other as to restrict movement of heat airflow. Metal panels place in parallel to said panels with corrugations as to permit airflow. Bi-metal sheets use as deterring heat from accumulating inside a said building by actively flushing it by electromechanical means; and

a thermal energy transportation flushing system. A mechanical device able to receive and concentrate heated air on a condenser. Said condenser able to constrict air flow forms a cumulative thermal reservoir. An air fan use to expel ambient air movement through the condenser.

2. A hybrid system composed of a solar thermal energy content accumulator and a ventilator of concentrated thermal energy, according to claim **1**, wherein a bi-level metal frame is created by an upper metal sheet and a lower metal sheet that is sandwich between a metal framework.

3. A hybrid system composed of a solar thermal energy content accumulator and a ventilator of concentrated thermal energy, according to claim **1**, wherein metallic parallel bars permit heat energy in the form of hot air to encapsulate in between metallic upper metal sheet and lower metal sheet.

4. A hybrid system composed of a solar thermal energy content accumulator and a ventilator of concentrated thermal energy, according to claim **1**, wherein perpendicular metallic bars with corrugations permit heat flow.

5. A hybrid system composed of a solar thermal energy content accumulator and a ventilator of concentrated thermal energy, according to claim **1**, wherein re-circulatory metallic vane transfers cooled air back for circulation inside solar energy content accumulator.

6. A hybrid system composed of a solar thermal energy content accumulator and a ventilator of concentrated thermal energy. An energy radiation absorber on a roof of a building for receiving solar radiation for absorbing a high degree of energy content. The design is constructed for proper thermal emissions which includes:

a bi-level metal sheet place one on top of another as to constrict heat energy. Metal panels place in perpendicular to each other as to restrict movement of heat airflow. Metal panels place in parallel to said panels with corrugations as to permit airflow. Bi-metal sheets use as deterring heat from accumulating inside a said building by actively flushing it by electromechanical means; and

a thermal energy transportation flushing system. A mechanical device able to receive and concentrate heated air on a condenser. Said condenser able to constrict air flow forms a cumulative thermal reservoir. An air fan use to expel ambient air movement through the condenser.

7. A hybrid system composed of a solar thermal energy content accumulator and a ventilator of concentrated thermal energy, according to claim **6**, wherein ventilation system actively receives concentrated heated air and by mechanical means expelling concentrated thermal energy.

8. A hybrid system composed of a solar thermal energy content accumulator and a ventilator of concentrated thermal energy, according to claim **6**, wherein an air pump actively re-circulates cooled air by into the system.

9. A hybrid system composed of a solar thermal energy content accumulator and a ventilator of concentrated thermal energy, according to claim **6**, wherein a condenser receives heated air, condenser serves as reservoir of concentrated thermal energy.

10. A hybrid system composed of a solar thermal energy content accumulator and a ventilator of concentrated thermal energy, according to claim **6**, wherein a fan forces ambient air through condenser.

11. A hybrid system composed of a solar thermal energy content accumulator and a ventilator of concentrated thermal energy, according to claim **6**, wherein a draining tube serves as a passage way of heated air through condenser.

12. A hybrid system composed of a solar thermal energy content accumulator and a ventilator of concentrated thermal energy, according to claim **6**, wherein a metal encase housing serves as air navigation vent for venting air through condenser.

13. A hybrid system composed of a solar thermal energy content accumulator and a ventilator of concentrated thermal energy. An energy radiation absorber on a roof of a building for receiving solar radiation for absorbing a high degree of energy content. The design is constructed for proper thermal emissions which includes:

a bi-level metal sheet place one on top of another as to constrict heat energy. Metal panels place in perpendicular to each other as to restrict movement of heat airflow. Metal panels place in parallel to said panels with corrugations as to permit airflow. Bi-metal sheets use as deterring heat from accumulating inside a said building by actively flushing it by electromechanical means, and;

a thermal energy transportation flushing system. A mechanical device able to receive and concentrate heated air on a condenser. Said condenser able to constrict air flow forms a cumulative thermal reservoir. An air fan use to expel ambient air movement through the condenser.

14. A hybrid system composed of a solar thermal energy content accumulator and a ventilator of concentrated thermal energy, according to claim **13**, wherein air inside solar thermal energy content accumulator becomes heated during the day by solar radiation and serves as thermal heat transference.

* * * * *