Sept. 9, 1969 JAMES E. WEBB 3,466,085

ADMINISTRATOR OF THE NATIONAL AERONAUTICS AND SPACE ADMINISTRATION

ARTICULATED MULTIPLE COUCH ASSEMBLY

Filed Jan. 5, 1968 10 Sheets-Sheet 1

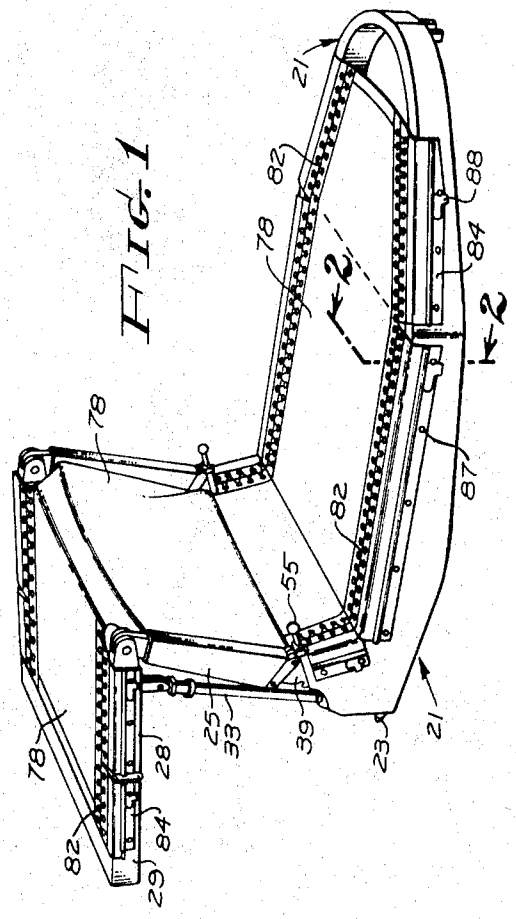

FIG. 1

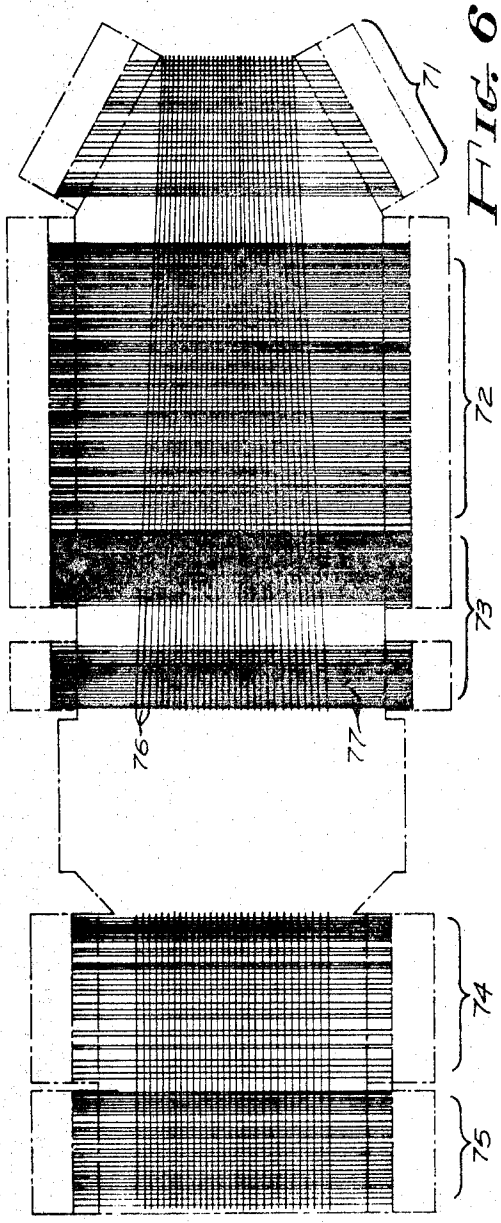

FIG. 6

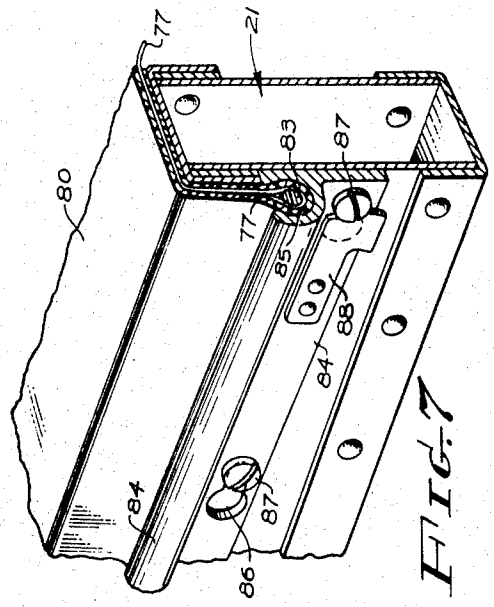

FIG. 7

INVENTORS
Leon P. Stone
David L. Johansen

BY

ATTORNEYS

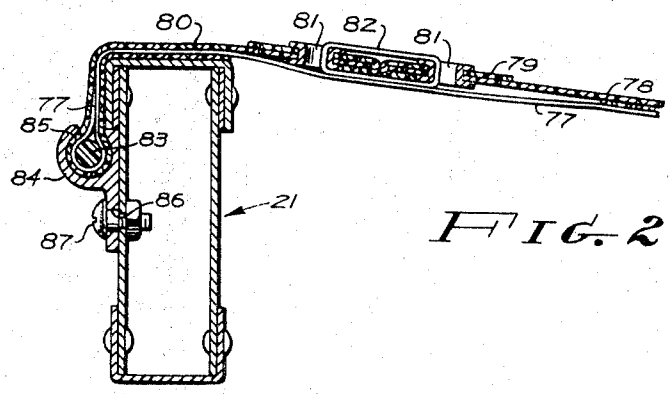

FIG. 2

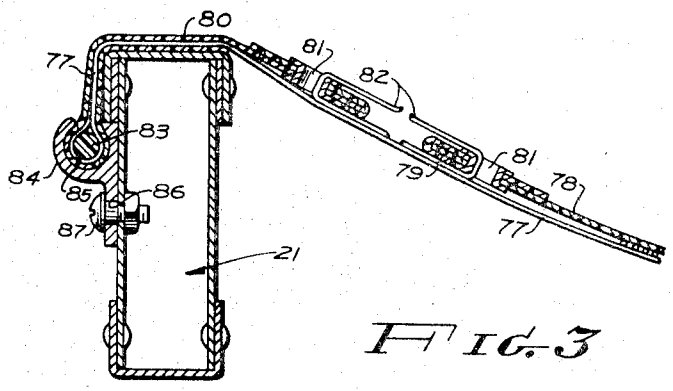

FIG. 3

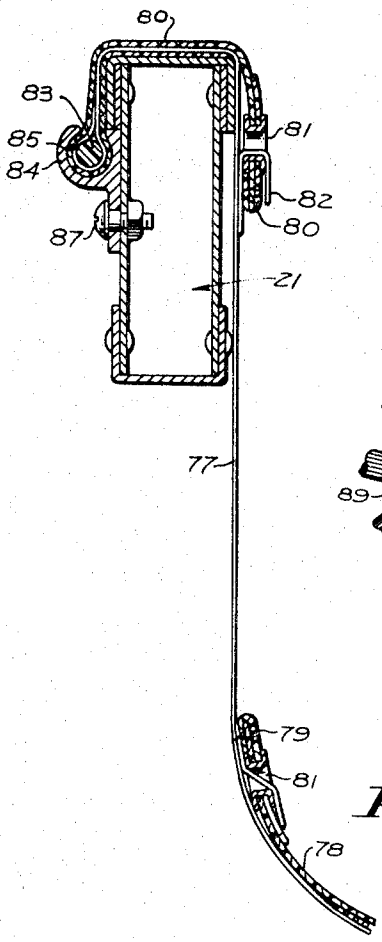

FIG. 4

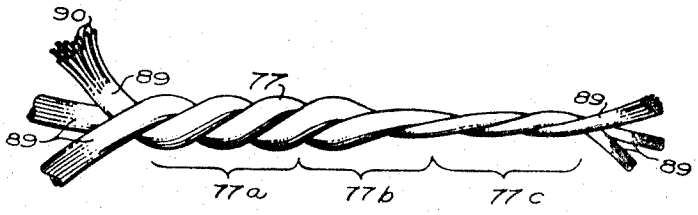

FIG. 5

INVENTORS
Leon P. Stone
David L. Johansen
BY
ATTORNEYS

FIG. 8

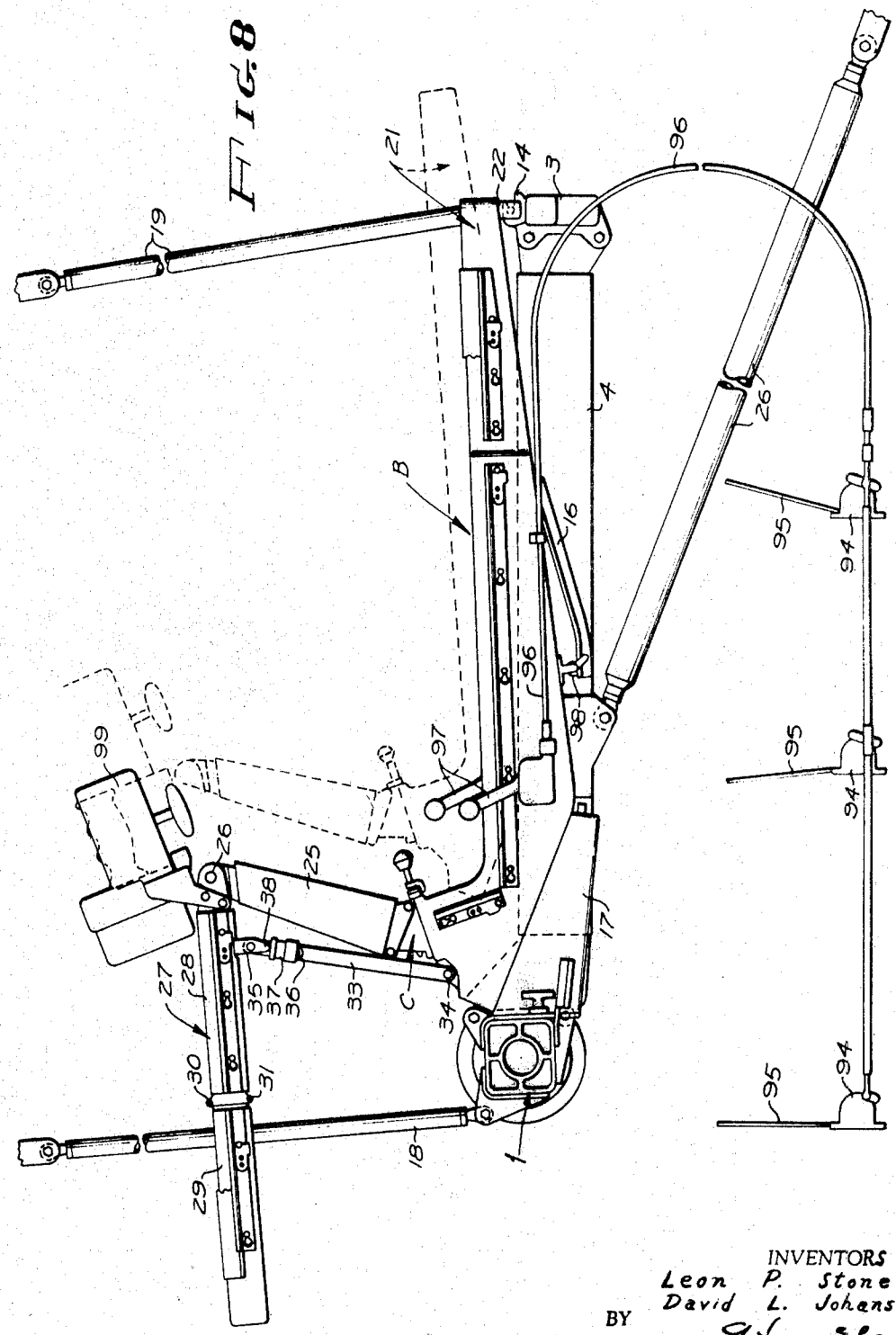

INVENTORS
Leon P. Stone
David L. Johansen
BY
G. Finnegan
M. J. Marnock
ATTORNEYS

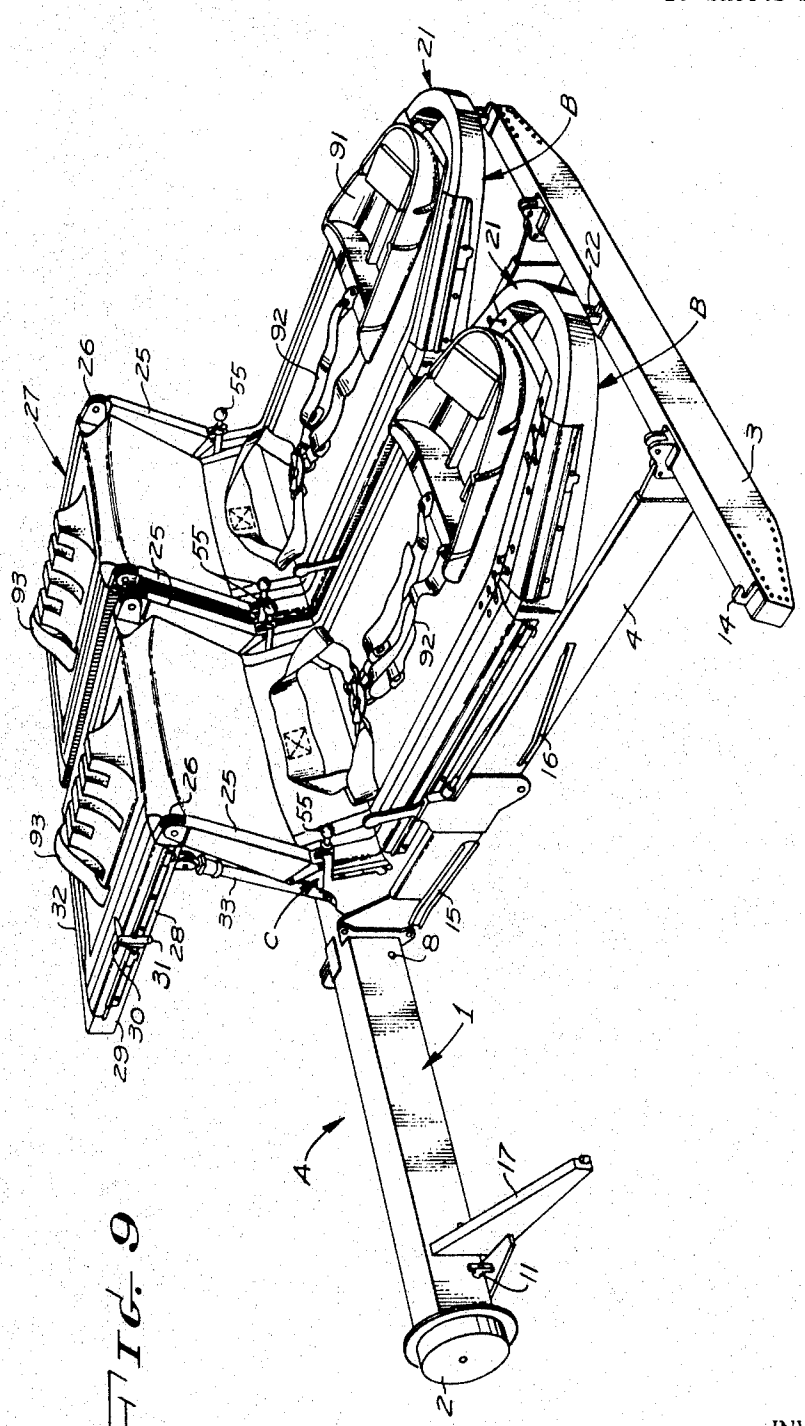

FIG. 9

INVENTORS
Leon P. Stone
David L. Johansen
BY
Atwood S. Cory
M. J. Marnock
ATTORNEYS

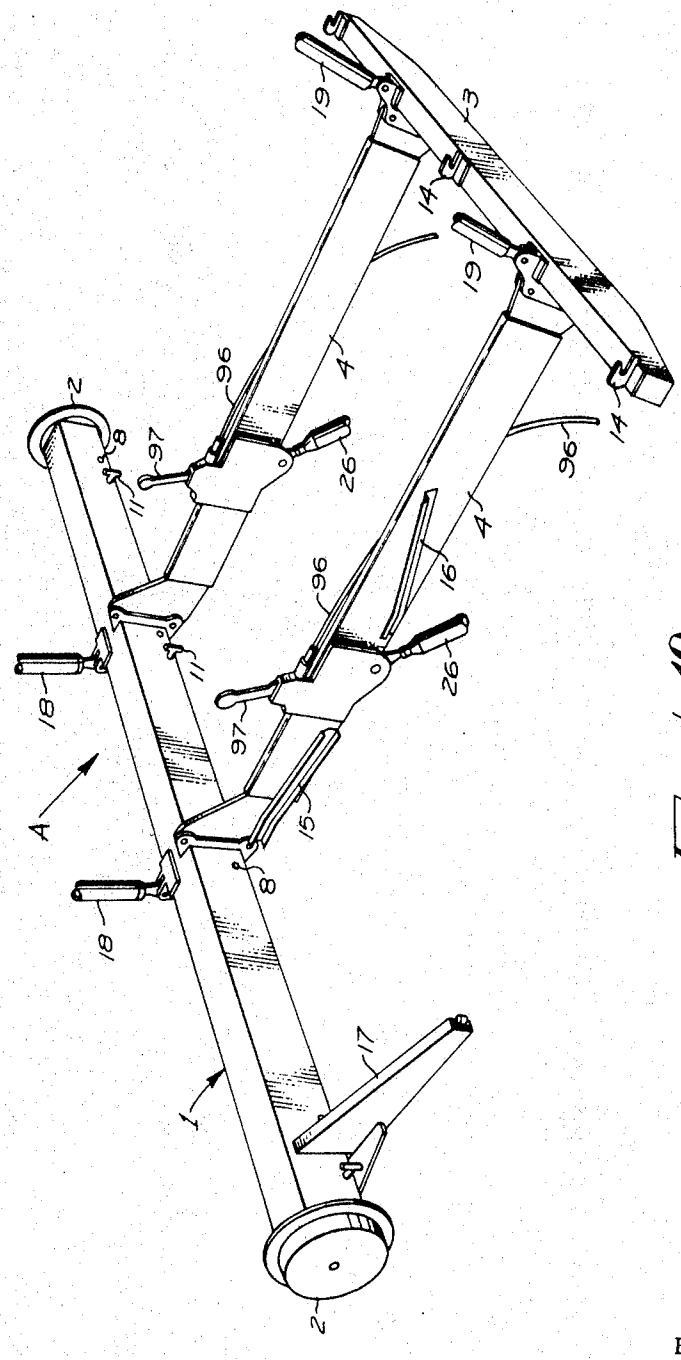

FIG. 10

INVENTORS
Leon P. Stone
David L. Johansen
BY
M. J. Marnock
ATTORNEYS

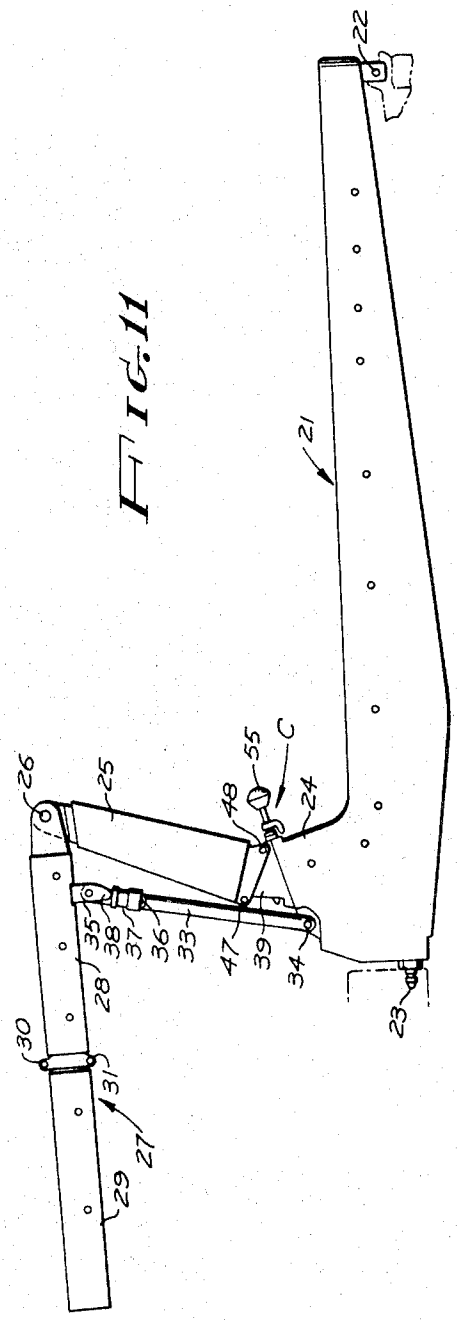

FIG. 11

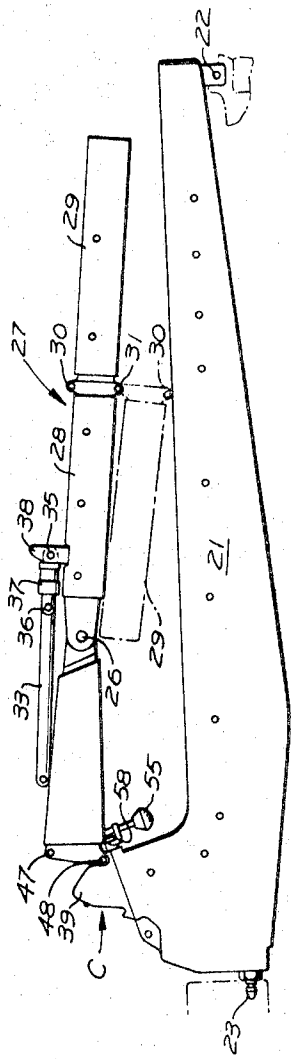

FIG. 12

INVENTORS
Leon P. Stone
David L. Johansen

BY
G. Franz Cary
M. J. Marnock
ATTORNEYS

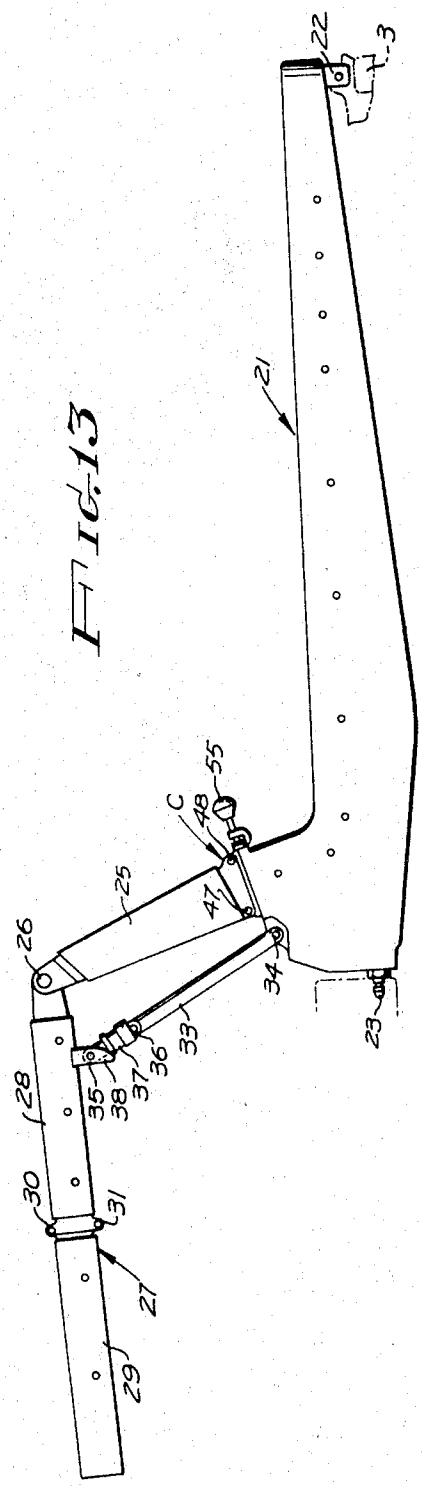

FIG. 13

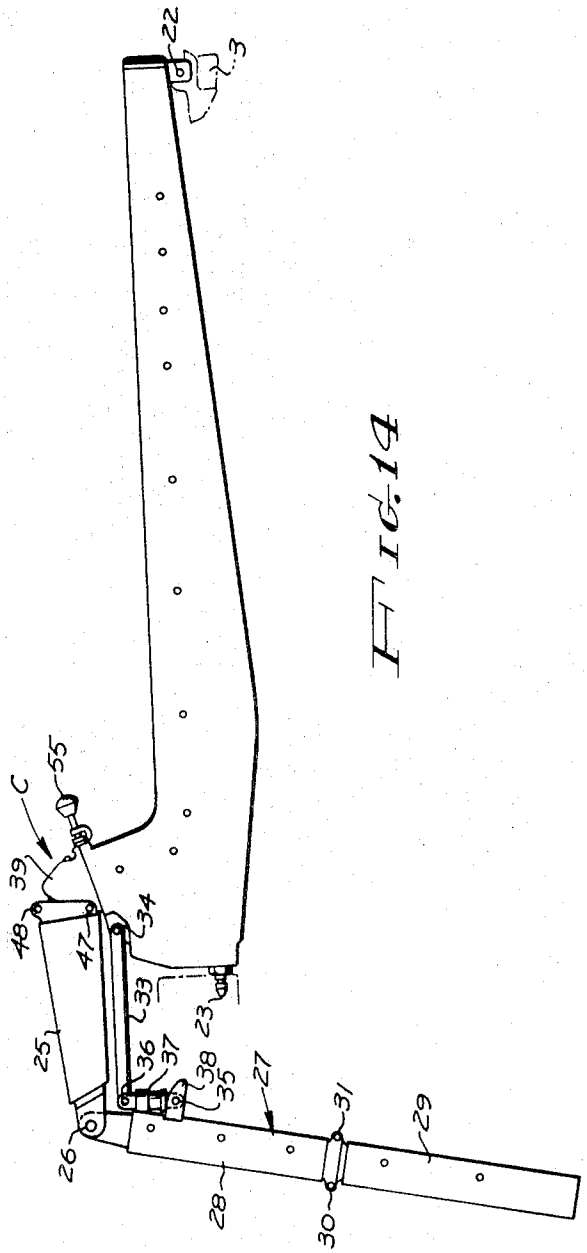

FIG. 14

INVENTORS
Leon P. Stone
David L. Johansen
BY
Attorneys
M. J. Marnock
ATTORNEYS

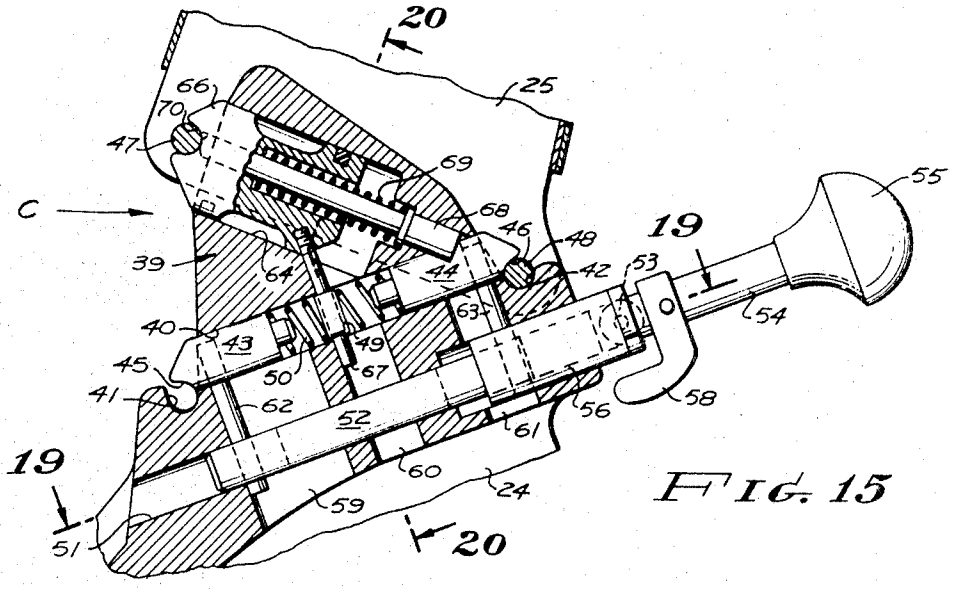

FIG. 15

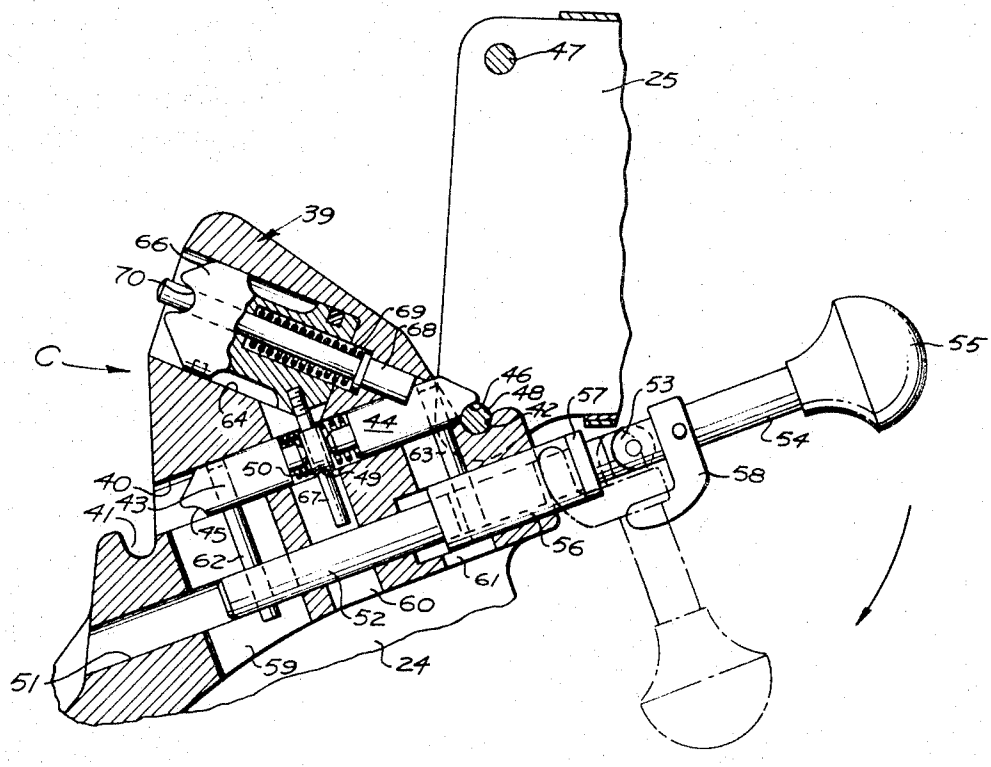

FIG. 16

INVENTORS
Leon P. Stone
David L. Johansen
BY
M. J. Marnocch
ATTORNEYS

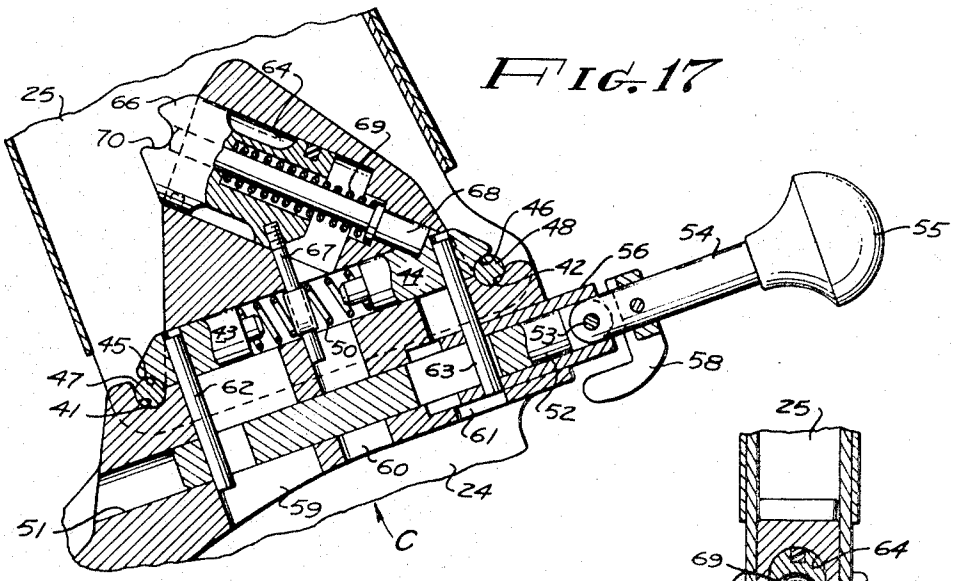

FIG. 17

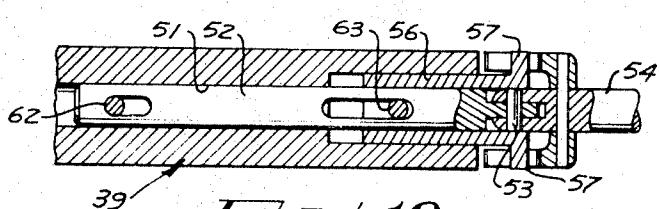

FIG. 19

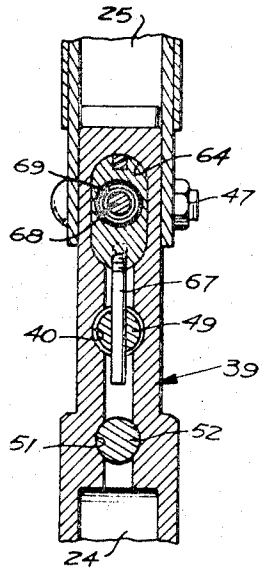

FIG. 20

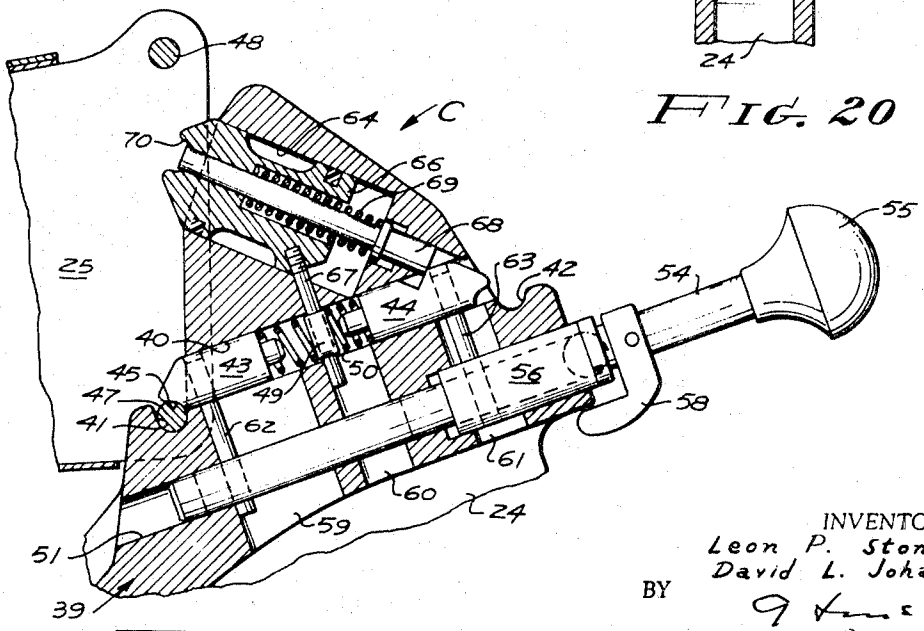

FIG. 18

INVENTORS
Leon P. Stone
David L. Johansen
BY
M. J. Marnock
ATTORNEYS

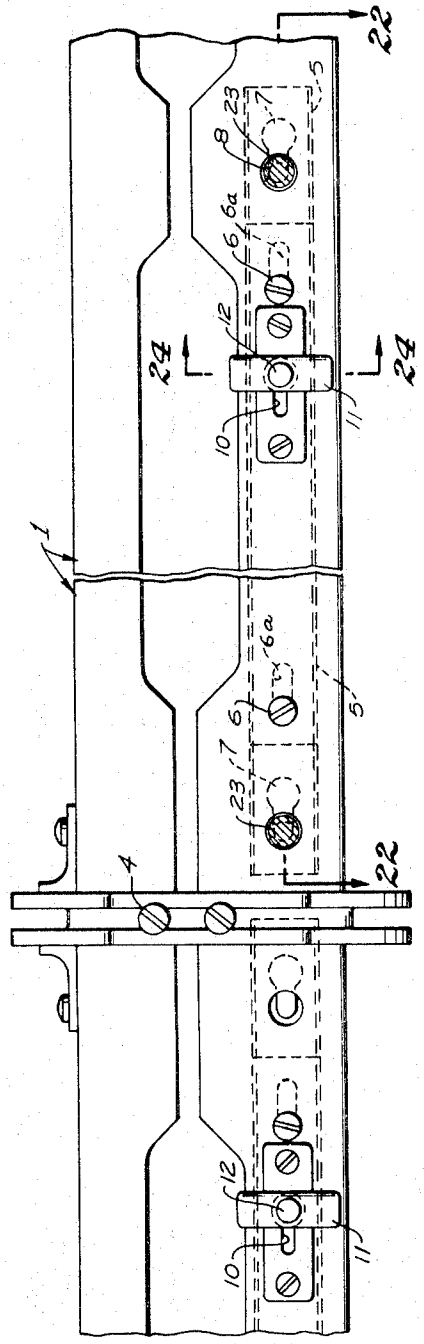

FIG. 21

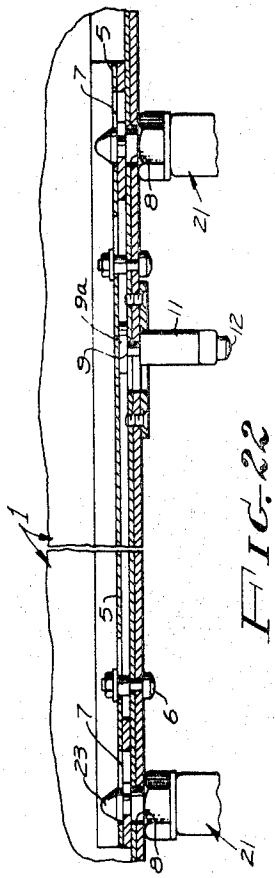

FIG. 22

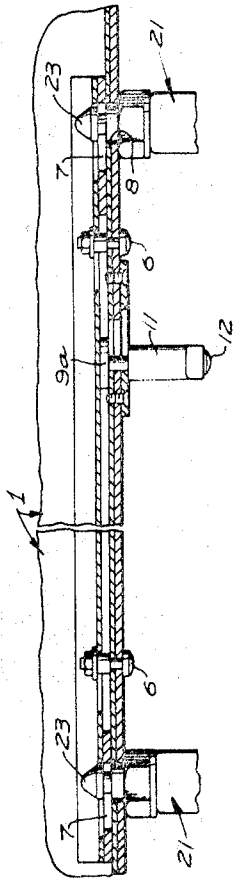

FIG. 23

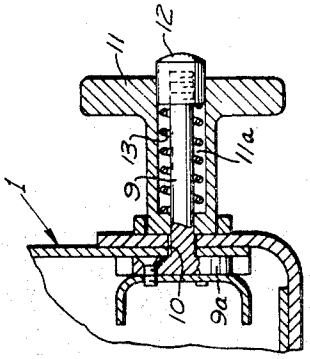

FIG. 24

INVENTORS
Leon P. Stone
David L. Johansen
BY
ATTORNEYS

United States Patent Office

3,466,085

Patented Sept. 9, 1969

1

3,466,085

ARTICULATED MULTIPLE COUCH ASSEMBLY

James E. Webb, Administrator of the National Aeronautics and Space Administration, with respect to an invention of Leon P. Stone, Sun Valley, and David L. Johansen, Los Angeles, Calif.

Filed Jan. 5, 1968, Ser. No. 695,973
Int. Cl. A47c *1/022, 1/031, 15/00*
U.S. Cl. 297—68 10 Claims

ABSTRACT OF THE DISCLOSURE

A multiple couch assembly particularly adapted for use by astronauts and comprising a plurality of articulated couch frames in side-by-side relationship, each individually detachably mounted on a main supporting frame structure. Each couch frame comprises a torso support section pivotally connected to a thigh support section, in turn pivotally connected to a lower leg support section. Each couch frame is provided with a releasable latch mechanism which is operable by a person on the couch to releasably secure the thigh support section at selected angles relative to the torso support section. The thigh support section is also pivotal to positions parallel to the torso section whereby the particular couch frame is either in a compact bundle suitable for stowage, or is adapted to provide a seat. Guide track means are provided on the main frame structure for cooperation with roller means on one of the couch frames whereby the one couch is permitted a degree of movement relative to the other couches in its longitudinal direction. A fabric webbing support is provided each couch frame with indivdual sections thereof possessing a yield strength in predetermined relation to the mass of the body member of a person it is adapted to support, whereby the attitude and contour of a person's body is maintained during the application and attenuation of excessive G forces.

The invention described herein was made in the performance of work under a NASA contract and is subject to the provisions of Section 305 of the National Aeronautics and Space Act of 1958, Public Law 85–568 (72 Stat. 435; U.S.C. 2457).

This invention relates to a multiple couch assembly and more particularly to an assembly of shock absorbing foldable couches adapted for use by occupants of a space vehicle.

During thet periods of launch and reentry of a space vehicle, the human body may be subjected to excessive G forces, and at the moment of landing impact these forces may exceed the limits of human tolerance. It is particularly desirable therefore that the astronaut be supported by a couch means, or the like, which is capable of attenuating large forces as might result from excessive accelerations and decelerations. It should also be one which is adaptable to various angular configurations as to provide an optimum configuration for preventing "blackout" of the astronaut during critical periods of space travel. It is also particularly desirable that these supports be susceptible to manipulation as would readily place the astronauts in position to operate the spacecraft controls and other apparatus in the space vehicle. Furthermore, since the available space in a space vehicle is severely limited, the support should also be foldable into a compact bundle for stowage.

In addition, as is true of all items contained in a spacecraft, the weight which may be allocated to the support of each astronaut is severely limited. It is particularly important, therefore, that the couch be light in weight.

The present invention, which has been devised to overcome attendant disadvantages of known prior art devices

2

and to provide the features desirable in an astronaut support, comprises a plurality of couches, each of which utilizes a fabric which not only serves as a support under ordinary load conditions, but also yields under excessive loads in such a manner that all parts of the astronaut's body are properly supported; that is, the effective strength of each region of the couch fabric corresponds to the load which it is intended to oppose. For example, the region of the fabric which supports the head has greater tensile strength than the region under the neck; the areas under the chest and pelvic regions have greater strength than the area under the waist; and the regions under the feet and shoes have greater strength than under the calves of the astronaut. The beneficial result is obtained by use of twisted cords which under normal use do not yield, but are resilient; however, under excessive loads the cords yield and stretch a substantial distance while absorbing a substantial amount of energy. Few, if any, of the cords break under design conditions, but actually increase in strength.

It is also a feature of this invention that the individual astronaut couches may be manipulated after takeoff to permit one of the crew to occupy an essentially seated position instead of a supine position, and to occupy other positions to facilitate operation of the controls. During flight the individual couches may be stored in a compact bundle and finally on reentry may be readily replaced in their initial position suitable for attenuating excessive G forces.

Other objects and many of the attendant advantages of the invention will be readily appreciated by reference to the following detailed description when considered with the accompanying drawings in which like reference numerals designate like parts throughout the figures thereof and wherein:

FIGURE 1 is a perspective view showing one of the couches including the couch frame and fabric, the couch being shown as it appears when adjusted for use during take off or reentry;

FIGURE 2 is an enlarged fragmentary sectional view taken through 2—2 of FIG. 1 showing the couch fabric structure in its normal condition and retained by lacing capable of withstanding the normal forces to which the fabric structure may be subjected;

FIGURE 3 is a similar fragmentary sectional view showing a transient condition occurring when the couch fabric structure is subjected to excessive loads beyond the strength of the lacing;

FIGURE 4 is a similar fragmentary sectional view showing the couch fabric wherein the transverse cords have been attenuated and have absorbed the energy resultting from excessive loads applied to the fabric structure;

FIGURE 5 is a greatly enlarged fragmentary side view of one of the cords of the couch fabric showing the manner in which it stretches to thereby absorb energy;

FIGURE 6 is an essentially diagrammatical plan view of the couch fabric structure indicating a typical pattern of the longitudinal and transverse cords;

FIGURE 7 is an enlarged fragmentary perspective view showing the manner in which the fabric structure is fastened to the couch frame;

FIGURE 8 is a side view showing a couch as it appears during takeoff or reentry, and showing the frace structure which supports the couch and, still further, indicating fragmentarily the takeup mechanism which is connected to the astronaut's harness structure for taking up slack, the harness structure being omitted;

FIGURE 9 is a perspective view showing portions of the frame structure and two of the three couches with a portion of the harness structure, headrest, and leg constraining means as provided for each couch;

FIGURE 10 is a perspective view of the frame structure with the couches removed and showing fragmentary portions of the structure which support the frame in the spacecraft;

FIGURE 11 is a side view of a couch frame in the position assumed during launch or reentry of the space vehicle;

FIGURE 12 is a similar view showing the couch frame folded for storage;

FIGURE 13 is a similar view showing the couch frame in which the leg supporting portion is moved forward, a position which is employed to provide a comfortable supine work and sleep position while in space;

FIGURE 14 is a similar view in which the calf and foot supporting portions of the frame are tilted downward, and that portion initially confronting the legs between the knees and hips of the astronaut has been moved to a horizontal position to form a seat which is employed to provide access to certain controls and equipment within the space vehicle;

FIGURE 15 is an enlarged fragmentary sectional view of the multiple hinge and latch mechanism provided for each couch frame and showing its condition for the disposition of the couch frame as it appears in FIGURE 11;

FIGURE 16 is a similar enlarged fragmentary sectional view of a multiple hinge and latch mechanism showing its condition for the disposition of its associated couch frame as shown in FIGURE 12;

FIGURE 17 is a similar enlarged fragmentary sectional view of a multiple hinge and latch mechanism showing its condition for the disposition of its associated couch frame as shown in FIGURE 13;

FIGURE 18 is a similar fragmentary enlarged sectional view of a multiple hinge and latch mechanism showing its condition for the disposition of its associated couch frame as shown in FIGURE 14;

FIGURE 19 is a fragmentary sectional view taken through **19—19** of FIGURE 15;

FIGURE 20 is a fragmentary sectional view taken through **20—20** of FIGURE 15;

FIGURE 21 is an enlarged fragmentary side view of the main supporting beam showing particularly the latching means for securing the couches thereto, a pair of attachment pins protruding from one couch being shown in section;

FIGURE 22 is a fragmentary sectional view taken through **22—22** of FIGURE 21, showing a pair of couch attachment pins in their secured condition;

FIGURE 23 is a similar fragmentary sectional view showing the attachment pins in their released condition; and

FIGURE 24 is a fragmentary sectional view taken through **24—24** of FIGURE 21, showing the operating handle of the couch latching means.

Referring more particularly to the drawings, the couch of this invention includes a main frame structure designated generally by A and shown best in FIGURES 9 and 10. The main frame structure includes a main supporting beam **1** having appropriate mounting means **2** a its extremities which are provided for suitably securing the couch within the space vehicle. Also secured within the space vehicle, or forming a part of the framework thereof, is a headbeam **3** which is parallel to the main beam **1**. The two beams are joined by two connecting bar assemblies **4** which may be capable of disassembly or removal during flight to improve the working space.

As shown particularly in FIGURES 8 and 21 through 24, the main supporting beam **1** is hollow and rectangular in cross section. Mounted on the inside of the wall of the beam **1** facing the headbeam **3** is a set of three slide bars **5**, one corresponding to each couch. Each side bar is provided with longitudinal slots **6***a* which receive guide bolts **6**. Each slide bar is also provided with a pair of keyhole latch slots **7** which register with corresponding

pairs of openings **8** in the adjacent wall of the beam **1**. Each slide bar is also provided with a pin **9** having an end flange **9***a*. The pin **9** extends outwardly through an additional keyhole slot **10** which is formed in the inside wall of the beam. Fitted on the pin **9** is a handle **11** which is provided with a bore **11***a* for receiving the pin **9**. Each pin is provided with an enlarged thumb engageable extremity **12** and a spiral spring **13** sleeved about the pin is interposed between this extremity and the base of the handle bore so as to urge the handle toward the keyhole slot **10**. By pulling outward on the handle **11** and forcing the handle laterally, the corresponding slide bar **5** may be manipulated to secure or release the couches, as will be described hereinafter.

The headbeam **3** is provided on its upper surface with three retainer hooks **14**, one for each of the couches, as indicated in FIGURES 9 and 10.

One of the connecting bar assemblies **4** is provided with a tandem pair of guide tracks **15** and **16** affixed on one side of the bar **4** and the corresponding end of the beam **1** nearest thereto is provided with a guide track **17** extending perpendicularly therefrom. These guide tracks serve to permit a manipulation of one of the couches which is not required of the other two couches.

In addition to the end supports or mounting means **2** provided for the main beam **1**, the main beam is also supported by a pair of tension bars **18** connected to an overhead portion of the vehicle. Similar tension bars **19** are provided for the headbeam **3**. Still further, struts **20** are secured intermediate the ends of the bar assemblies **4** and extend under the headbeam **3** for attachment to the framework of the space vehicle.

Each of the couches includes a couch frame structure B as is shown in FIGS. 1 and 9. Each frame structure B includes a torso-head frame **21** which is U-shaped in plan. The head end of the frame is provided with a downwardly depending attachment bracket **22** which engages a retainer hook **14** of the headbeam **3**. The two extremities of the U-shaped frame are provided with latch pins **23** (see FIGS. 11 to 14) which continue therefrom and which are received in the openings **8** and keyhole latch slot **7** in the slide bar **5** so as to be secured to the main supporting beam **1**. By manipulating the corresponding handle **11**, the pins may be freed from the main supporting beam so that the couch frame may be moved outwardly therefrom and upon such movement disengage the retainer hooks **14**.

Adjacent its two extremities, each U-shaped frame **21** is provided with a pair of upwardly directed mounting pads **24**. The mounting pads are located just beyond but laterally of the pelvic region of the astronaut intended to occupy the couch. Secured to, or forming a part of, each mounting pad is a multiple latch and hinge mechanism C which will be described in more detail hereinafter. Adjustably secured to each mechanism C is a strut member **25** shown in FIGS. 1, 8 and 11 to 17 which, when the couch is in position for launch or reentry, occupies a vertical position, and is located on either side of the upper legs of the astronaut. The upper extremities of the strut members are essentially at knee height above the torso-head frame **21** and are joined by hinge connections **26** to a lower leg frame **27** which, as shown in FIGURES 8 and 9, extends horizontally. The lower leg frame **27** comprises parallel sides, each of which is divided into two side members **28** and **29** joined together by upper and lower separable hinged connectors **30** and **31** so that the pair of side members may be folded in either direction, one on the other. The extremities of the side members **29** remote from the hinge connections **26** are joined by a rigid cross member **32**.

The lower leg frame **27** and the extremities of the torso-head frame **21** are also connected by a pair of strut rods **33** (FIGS. 11 to 14), each having a lower pivotal connection **34** with the torso-head frame **21** and an upper

pivotal connection at **35** with the side member **28** of lower leg frame **27**. Each strut rod is also provided with an intermediate pivot **36** which may be held rigidly straight as shown in FIGURES 8, 11 and 13, or pivoted as shown in FIGURE 14. The sleeve **37** is spring loaded by a spring (not shown) against projection **38**, which is a cam surface, extending from the upper pivotal connection **36** whereby the sleeve is cammed to a position in sleeved relationship over the pivot **36**.

The multiple hinge and latch mechanism C which joins the torso-head frame **21** to the vertical struts **25** permits complex folding of the frame structure. The various relative positions of the couch frame structure are illustrated in FIGURES 11, 12, 13 and 14. Corresponding positions of the multiple hinge and latch mechanism are shown in FIGURES 15, 16, 17 and 18. Each mechanism C includes a body member **39** which is secured to or forms an integral part of the corresponding mounting pad **24**. The body member **39** is essentially triangular in side aspect and includes a main latch bore **40**. The body member projects beyond the extremities of the main latch bore and at one side thereof to provide shoulders in which are formed upward facing latch grooves **41** and **42**. The latch bore **40** receives a pair of latch bolts **43** and **44**, the distal ends of which are provided with downward facing notches **45** and **46** adapted to cooperate with the grooves **41** and **42**, respectively. The latch grooves **41**, **42** in body **39** and notches **45**, **46** in bolts **43**, **44** are adapted to engage either alternately or in concert a pair of latch pins **47** and **48** carried by the corresponding vertical strut member **25**.

Interposed within the bore **40** between the latch bolts **43** and **44** is a disc **49**. The disc is also interposed between a pair of spiral springs **50** also within bore **40** which urge the bolts outwardly from each other.

Below the main latch bore **40** and in parallel relation thereto there is formed in the body member **39** an operating bar bore **51** which slidably receives an operating bar **52**. The operating bar protrudes from the bore **51** in the direction of the head end of the couch frame and is joined by a pivotal connection **53** to a handle stem **54** terminating in a handle **55**. Slidably mounted on the bar **52** is a sleeve **56** which is movable to cover the pivotal connection **53** to prevent relative pivotal movement between the operating bar **52** and the handle stem **54**. The sleeve is provided near its protruding end with side flanges **57** which are engageable by a split hook **58** mounted on the handle stem. This engagement is effected when the sleeve **56** clears the connection **53** and the handle stem is pivoted, as shown in broken lines in FIGURE 16.

The main latch bore **40** and the operating bar bore **51** are joined by connecting slots **59**, **60** and **61**. The two extreme slots **59** and **61** receive connecting pins **62** and **63**, respectively, which connects the operating bar **52** with the latch bolts **43** and **44**, respectively. The pin **63** extends through the sleeve **56** as well as the bar **52** so that the pin **63** may be moved by the sleeve **56**. The bar **52** and the sleeve **56** have longitudinal slots so as to have a limited degree of free motion. The body member **39** is also provided with an auxiliary latch bore **64** disposed in angular relation to the main latch bore **40** of oblong cross section and defining an axis which intersects the axis defined by the latch groove **42**. The auxiliary latch bore **64** slidably receives a bolt **66**. The bore **64** intersects the mid-slot **60** and receives a crosspin **67** which extends through the disc **49** which is disposed between the springs in the bore **40**.

The inner end of the auxiliary latch bore **64** is reduced in diameter and intersects the main latch bore **40**. The reduced portion of the bore **64** receives a pin **68** which protrudes into the main latch bore **40** and is received in a notch provided in the latch bolt **44**. The latch bolt **66** is provided with a central axial bore through which the pin **68** extends. A spiral spring **69** surrounds the pin **68** urging the inner end thereof into engagement with the latch bolt **44** and urging the latch bolt **66** in a direction to cause the bolt to protrude from the bore **64** to the extent permitted by the pin **67** and the slot **60**. The outer extremity **66*a*** of the bolt **66** is provided with a notch **70** which is intended to receive the same latch pin **47** as is received by the latch bolt **43** and latch groove **41**.

Operation of the multiple hinge and latch mechanism C is as follows: When the couch frame is in the position shown in FIGURE 11, the multiple hinge and latch mechanism C is in the condition shown in FIGURE 15; that is, the latch pins **47** and **48** on the strut **25** are held by the latch bolts **66** and **44**, respectively. If the handle **55** is pulled outwardly as shown in FIGURE 16, the latch pin **48** is retained by the latch bolt **44**; however, the latch pin **47** is disengaged from the latch bolt **66** which has been drawn inward by the outward movement of the handle **55** acting through the bar **52**, cross-pin **62**, bolt **43**, disc **49**, and pin **67**. As a consequence, the couch structure may be folded as indicated in FIGURE 12.

When the multiple hinge and latch mechanism is in the position shown in FIGURE 16, the strut members **25** may be rotated counterclockwise from the position shown in FIGURES 11 or 12 to the position shown in FIGURE 13, causing the bolt **43** to engage the latch pin **47** (see FIG. 17). When the pin **47** has been secured by the bolt **43**, the handle **55** may be pressed inward to free the pin **48** from the bolt **44** shown in FIGURE 18 so that the strut **25** and the lower leg frame **27** may occupy the position shown in FIGURE 14.

In order that the couch frame may be folded as shown in FIGURE 12, the handle may be pivoted from the solid line position to the broken line position shown in FIGURE 16. It also folds so that strut **25** and leg frame **27** can fold as shown in FIGURE 12. It will be noted that in order to place the couch frame in the condition shown in FIGURE 12, the struts **33** are disconnected from the lower pivotal connection **34**. It will also be noted that in order for the couch frame to occupy the position shown in FIGURE 14, the sleeve **36** is disengaged from the projection **37**. A spring inside the sleeve **36** urges the sleeve against the projection **37**, as the struts **25** are rotated from the position shown in FIGURE 14 to that of FIGURE 13, the cam surface of the projection **37** forces the sleeve **36** over the pivot joint in the strut **33**, locking the strut in a straight position.

Reference is now directed to the couch fabric and fastening means D which is shown in FIGURES 1 through 7. This construction includes a couch fabric forming a head support **71**, a torso support **72**, a pelvic support **73**, a calf support **74**, and a foot support **75**. The fabric is formed of longitudinal cords **76** and cross cords **77** best shown in FIG. 6. The principal function of the longitudinal cords is to hold the cross cords in place. The longitudinal and cross cords are preferably bonded together at their points of intersection such as by cement.

The cross cords are not uniformly distributed, that is, the density of the cross cords varies with the loads that they are expected to receive during the application of excessive G forces as might occur during launch and reentry. More particularly, the mass of each unit of the body from the head to the feet is calculated and the number of strands thereunder is selected as that as nearly as possible each strand throughout the length of the couch will be subjected to the same degree of deformation whereby the attitude and contour of the astronaut's body will be maintained and the body supported in a manner to avoid injury. Where the actual force is greater, more strands are employed. Where the actual force is less, the number of strands is reduced.

The fabric represented by the longitudinal cords **76** and cross cords **77** is covered by a cloth **78** bordered by an inner marginal web **79** which lies contiguous to an outer marginal web **80**. The webs **79** and **80** are provided

with eyelets **81** and are joined by lacing **82**. The upper marginal web is folded upon itself and overlies the couch frame. The folded edge of the web forms a loop which receives one or more anchor bars **83**. The cross cords **77** extend between the folded portions of the outer marginal web **80** and are wrapped about the anchor bars **83**.

The anchor bars with the outer marginal web and cross cords wrapped thereabout are secured by retainer members **84** each having a C-shaped channel **85**. The retainer members are slipped into position endwise with respect to the anchor bars **83**. Each retainer member is provided with keyhole slots **86** which fit over headed anchor pins **87** extending from the couch frame. At appropriate intervals locking levers **88** are provided as shown best in FIGURES 1 and 7 to secure the retainer members **84** in place.

The cords **76** and **77**, particularly the transverse or cross cords **77**, are formed of nylon or of plastic material having similar properties. Each nylon cord as shown in FIG. 5 comprises several strands **89**, each strand in turn comprising a plurality of filaments **90**. The filaments are extruded in such a manner and are wound into strands and the strands into cords in such a manner that the resulting cords have not been pretensioned, or have received only a nominal degree of pretension. The cords in this condition are relatively large as indicated by **77***a* at the left side of FIGURE 5.

If a cord is tensioned it will elongate as indicated by **77***b* in FIGURE 5, and ultimately assume throughout its length the attenuated condition as indicated by **77***c* at the right of FIGURE 5. The elongation does not take place uniformly, but occurs at random. As each localized or more extensive region of the cords elongates, its tensile strength increases; that is, the elongated and stretched cord as shown at the right of FIGURE 5 is stronger than the portion of the cord shown at the left of FIGURE 5. During the transition to its elongated condition in the region **77***b*, each cord absorbs a substantial amount of energy. By proper preselection of the number and size of cords, the cords may be designed to attenuate at any desired multiple of the load level gravity.

Operation of the couch fabric D is as follows: Under normal conditions of operation, including the increased load level force during normal launch, the forces exerted on the cloth **78** and the cords **76** and **77**, as well as the lacing **82**, never exceeds the initial elastic limit of the cords. This is true during reentry if all systems function properly. In case of a malfunction, assuming the astronaut to be properly supported on the couch, the lacing **82** severs when the load force exceeds some predetermined value. Thereupon the load is carried entirely by the cross cords **77**. Then if the predetermined load limit is exceeded, the cords elongate and in doing so limit the effective load on the astronaut supported on the couch.

Each couch as shown in FIG. 19 is equipped with a suitable headrest **91**, harness **92**, and leg supports **93**. The leg supports fit between the legs below the knee. The headrest, harnesses, and leg supports are conventional and are essentially similar to those which have been employed in other space vehicles and high speed aircraft. Other apparatus previously employed in spacecraft and in high speed aircraft is a means for taking up any slack which may develop in the harness due to the displacement of the astronaut. Such a conventional device as shown in FIG. 8 involves takeup reels **94** joined by connecting straps **95** joined to the harness. The takeup reels are released by control cables **96** connected to handles **97** located in easy reach of the astronaut.

It has been found feasible to permit a degree of movement of one of the couches, as indicated by broken lines in FIGURE 8, which is not required of the others. This movement is accomplished by rollers **98** which ride in the guide tracks **15**, **16**, and **17** after the couch has been released from the frame structure A. The tracks and rollers enable the selected couch to move beyond the head beam **3** a short distance, and is intended for the purpose of placing one of the astronauts in position for better view through several of the windows provided in the space vehicle.

It has also been found desirable to mount some of the spacecraft controllers controls **99** at the upper end of one of the struts **25** in reach of one of the astronauts.

It will therefore be seen that a unique multiple couch assembly is disclosed herein which is particularly suited for use by astronauts. The main frame structure supports a plurality of couches in side-by-side position, each of which is readily and individually attachable and detachable for purposes of stowage. Each articulated couch frame may be manipulated to place its occupant in position to operate controls and other apparatus in a space vehicle, and in addition is provided with a unique hinge and latch mechanism which facilitates manipulation of and folding of the couch frame to various configurations suitable for launch, reentry, seating, and stowage. The specially constructed couch fabric and its means of attachment to the couch frame provides comfortable support for the astronauts during takeoff and landing as well as during rest periods, but more particularly is designed to yield when subjected to excessive "G" forces in such a manner as to materially reduce the effect of these forces to a level which may be tolerated by the astronauts without injury.

What is claimed and desired to be secured by Letters Patent is:

1. A multiple couch assembly comprising:

a frame structure means adapted to support a plurality of couches in side-by-side position;

a plurality of articulated couch frames of rigid spaced members, each said couch frame encompassing an occupant receiving space and being individually attachable and detachable from said frame structure means, each said couch frame comprising a torso support section, a thigh support section pivotally connected to said torso support section, and a lower leg support section pivotally connected to said thigh support section;

releasable latch means for releasably securing said thigh support section and said torso support section of said couch frame in a selected angular relationship whereby said thigh support section is disposable to a first position wherein said thigh support section forms an acute angle with said torso support section and to a second position wherein said thigh support section forms an obtuse angle with said torso support section, said thigh support section being pivotal to a third position in substantially parallel and superposed relationship with said torso support section, and said thigh support section being pivotal to a fourth position substantially parallel with said torso support section and extending in a longitudinal direction therefrom;

articulated strut means pivotally connected at one end to said lower leg support section and at its other end to said torso support section and being operable in rigid configuration to support said lower leg section in said third and fourth positions, said articulated strut means being detachable at its pivot connection with said lower leg support section to permit folding of said thigh support and lower leg support sections to said third position, said articulated support means being foldable to permit pivotal movement of said lower leg support section to a position depending substantially vertically from said thigh support section when said thigh support section is in said fourth position.

2. A multiple couch assembly of the character described in claim **1** further comprising:

a fabric webbing of normally nonelastic material for each said couch frame;

means for securing the peripheral margins of each said webbing to its associated couch frame, each said webbing possessing a yield strength in predetermined relationship to the mass of a part of a person's body normally resting thereon when the person is reclining on said couch, and being permanently elongatable when subjected to tension forces in excess of its yield strength.

3. A multiple couch assembly comprising:

a frame structure means adapted to support a plurality of couches in side-by-side position;

a plurality of articulated couch frames of rigid spaced members, each said couch frame encompassing an occupant receiving space and being individually attachable and detachable from said frame structure means, each said couch frame comprising a torso support section, a thigh support section pivotally connected to said torso support section, and a lower leg support section pivotally connected to said thigh support section;

each said couch frame being provided with a releasable latch means operable by a person in reclined position on the couch frame for releasably securing its thigh support section and torso support section in a selected angular relationship whereby the thigh support section is movable to a first secured position to form an acute angle with the torso support section and to a second secured position to form an obtuse angle with the torso support section, the thigh support section also being pivotal to a third position substantially parallel and in superposed relation with the torso support section in which the couch frame is suitable for stowage, and a fourth position substantially parallel with the torso support section and extending in a longitudinal direction therefrom whereby the thigh support section is useful as a rest.

4. A multiple couch assembly of the character described in claim 3 further comprising:

a fabric webbing of normally nonelastic material for each said couch frame;

means for securing the peripheral margins of each said webbing to its associated couch frame, each said webbing possessing a yield strength in predetermined relationship to the mass of a part of a person's body normally resting thereon when the person is reclining on said couch, and being permanently elongatable when subjected to tension forces in excess of its yield strength.

5. A multiple couch assembly of the character described in claim 3 wherein the lower leg support section of each said couch frame comprises upper and lower sections which are pivotally connected, and include means for releasably connecting and securing said upper and lower sections in coplanar relationship.

6. A multiple couch assembly of the character described in claim 1 further including guide track means on said frame structure means and roller means on one of said couch frames cooperable with said guide track means whereby said one of said couch frames is movable relative to the other couches in its longitudinal direction.

7. A multiple couch assembly of the character described in claim 3 further including guide track means on said frame structure means and roller means on one of said couch frames cooperable with said guide track means whereby said one of said couch frames is movable relative to the other couches in its longitudinal direction.

8. A couch assembly comprising:

a frame structure means adapted to support a couch thereon;

an articulated couch frame of rigid spaced members, said couch frame encompassing an occupant receiving space and being attachable and detachable from said frame structure means, said couch frame comprising a torso support section, a thigh support section pivotally connected to said torso support section, and a lower leg support section pivotally connected to said thigh support section;

said couch frame being provided with a releasable latch means operable by a person in reclined position on the couch frame for releasably securing its thigh support section and torso support section in a selected angular relationship whereby the thigh support section is movable to a first secured position to form an acute angle with the torso support section and to a second secured position to form an obtuse angle with the torso support section, the thigh support section also being pivotal to a third position substantially parallel and in superposed relation with the torso support section in which the couch frame is suitable for stowage, and a fourth position substantially parallel with the torso support section and extending in a longitudinal direction therefrom whereby the thigh support section is useful as a seat.

9. A couch assembly of the character described in claim 8 further including guide track means on said frame structure means, and roller means on said couch frame cooperable with said guide track means whereby said couch frame is movable in its longitudinal direction on said frame structure means.

10. A couch assembly of the character described in claim 8 further including:

a fabric webbing of normally nonelastic material for said couch frame;

means for securing the peripheral margins of said webbing to its associated couch frame, said webbing possessing a yield strength in predetermined relationship to the mass of a part of a person's body normally resting thereon when the person is reclining on said couch, and being permanently elongatable when subjected to tension forces in excess of its yield strength.

References Cited

UNITED STATES PATENTS

2,652,966	9/1953	Griswold	5—191 X
2,722,267	11/1955	Liljengren	5—191 X
2,788,531	4/1957	Dye et al.	5—191
3,038,175	6/1962	Faget et al.	5—345
3,089,150	5/1963	Briggs et al.	5—68
3,165,355	1/1965	Hitchcock et al.	5—345 X
3,261,639	7/1966	Phillips	5—69 X
3,270,908	9/1966	Faget et al.	244—1
3,281,141	10/1966	Smiley	5—69

JAMES T. McCALL, Primary Examiner

U.S. Cl. X.R.

5—69, 191; 244—1; 297—232