Aug. 5, 1941. M. B. O'REILLY 2,251,551

NAIL POLISH PROTECTOR

Filed May 2, 1940

Fig. 1.

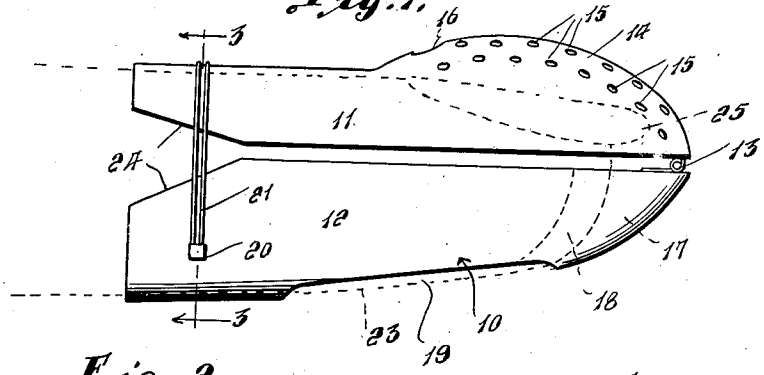

Fig. 2.

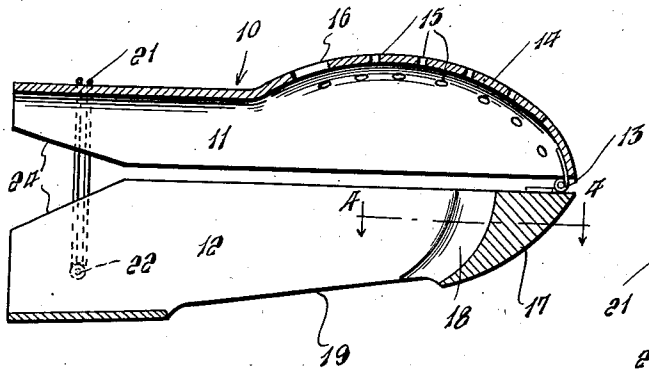

Fig. 3.

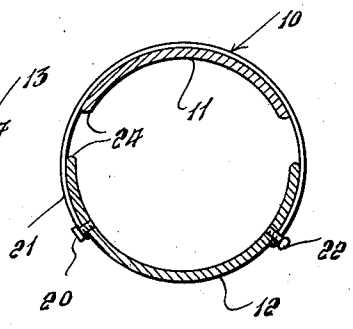

Fig. 4.

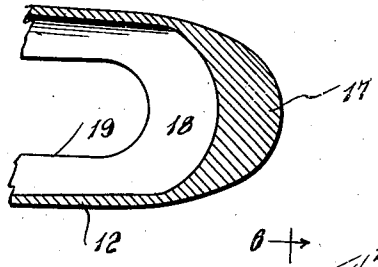

Fig. 5

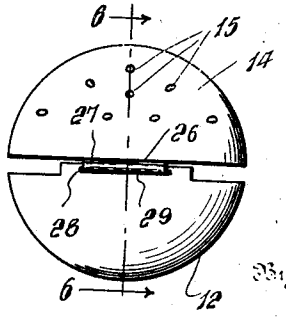

Fig. 6.

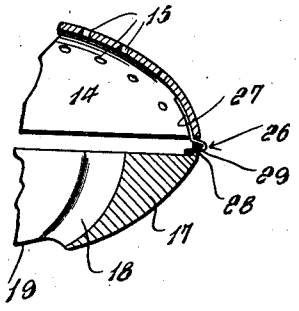

Inventor

Myles B. O'Reilly

By L. F. Randolph

Attorney

Patented Aug. 5, 1941 2,251,551

UNITED STATES PATENT OFFICE

2,251,551

NAIL POLISH PROTECTOR

Myles B. O'Reilly, Union, N. J.

Application May 2, 1940, Serial No. 333,044

3 Claims. (Cl. 2—21)

This invention relates to an improved construction of finger stall designed and adapted to be readily applied to the end of a finger for protecting newly applied nail polish to prevent the polish from smearing by contact with other elements while drying and to enable the wearer to use the fingers without danger of smearing the polish.

Still another aim of the invention is to provide a stall construction that may be economically manufactured and sold in sets for personal use to be worn after applying polish to the nails to protect the newly applied polish while drying and to enable the wearer to perform other duties in the home requiring the use of the hands during the drying period.

Still a further aim of the invention is to provide a protector of the class described formed of hingedly connected sections having yieldable means for holding the sections in applied position beyond the last joint of a finger with one of said sections provided with a convex apertured portion adapted to be disposed over the finger nail and out of contact therewith to prevent smearing of the polish and to permit a free circulation of air around the nail to hasten the drying period.

Still another aim of the invention is to provide a finger nail protector wherein the under section is provided with an elongated opening for exposing the ball of the finger so that the wearer's sense of touch will not be hampered thus enabling the performance of numerous tasks which would otherwise be prevented.

Other objects and advantages of the invention will hereinafter become more fully apparent from the following description of the drawing, which illustrates preferred embodiments thereof, and wherein:

Figure 1 is a side elevational view showing the preferred form of the finger nail protector applied to the end of a finger,

Figure 2 is a longitudinal vertical central sectional view of the same,

Figure 3 is a transverse vertical sectional view of the protector taken substantially along the plane of the line 3—3 of Figure 1,

Figure 4 is a longitudinal, horizontal sectional view, on an enlarged scale taken substantially along the plane of the line 4—4 of Figure 2,

Figure 5 is an end view in elevation looking toward the forward end of a slightly modified form of the protector, and

Figure 6 is a sectional view taken substantially along the plane of the line 6—6 of Figure 5.

Referring more particularly to the drawing, wherein like reference characters designate like or corresponding parts throughout the different views, 10 designates generally the finger nail protector which comprises the stall adapted to be worn on the end of a finger beyond the first joint and which includes a top section 11 and a bottom section 12, which sections are pivotally connected at their forward ends in spaced apart relationship to each other by means of a hinge 13.

As best seen in Figure 3, the sections 11 and 12 are arcuately shaped in cross section. As seen in Figures 1 and 2, the section 11 is provided adjacent its forward end with an enlarged outwardly bowed or convex portion 14 which is provided with a plurality of vent openings 15 and with a relatively large opening 16 adjacent the rear end of the portion 14.

The bottom section 12, at its forward end, is provided with a thickened portion 17 having a concave or arcuately shaped inner face 18. The section 12 is also provided with an elongated opening 19 which extends from the thickened portion 17 to adjacent the free end of the section 12.

A headed fastening 20 is mounted in the section 12, at one side thereof, for clamping to the section 12 a portion of a rubber band 21 which extends over the section 11, adjacent its free end and which is looped around the headed stud 22 which projects outwardly from the opposite side of the section 12 to thereby yieldably connect the free ends of the sections 11 and 12.

From the foregoing it will be obvious that the elastic band 21 may be disengaged from the stud 22 and the sections 11 and 12 opened relatively to each other to permit the end of a finger to be inserted therein with the ball of the finger resting in the opening 19 after which the sections 11 and 12 are swung on the hinge 13 to a closed position substantially parallel to each other. The elastic band 21 is then extended over the section 11 and attached around the stud 22 to yieldably retain the protector 10 in position on the end of the finger, shown in dotted lines in Figure 1 and designated 23. In this position, the longitudinal edges of the sections 11 and 12 are normally disposed in spaced apart relationship to each other and these edges, adjacent the free ends of the sections, are cut away as seen at 24 to permit the free ends of the sections 11 and 12 to be compressed by the elastic band 21 to yieldably retain the protector 10 in place on the end of the finger beyond the first joint

thereof. With the protector 10 thus applied, the finger nail of the finger, designated 25, is disposed beneath and out of contact with the convex portion 14 so that the nail 25 will be protected by the portion 14 to prevent the coating of polish thereon from being smeared. The vent openings 15 and the opening 16 combine with the space between the forward ends of the sections 11 and 12 to permit a free circulation of air around the finger nail 25 to hasten the drying of the nail. The convex face 18 of the thickened portion 17 provides a rest or seat for the tip of the finger which is adapted to be pressed thereagainst for effectively and comfortably retaining the finger nail 25 beneath and away from the convex portion 14. The opening 16 permits the nail 25 to be observed without removing the protector 10 to ascertain if and when the polish is dried sufficiently so that the protector 10 can be removed. The elongated opening 19 exposes the ball of the finger, as indicated in dotted lines in Figure 1, so that the wearer of the protector may use the finger for various purposes and tasks requiring the sense of touch without interference by the protector.

In Figures 5 and 6 a slightly modified form of hinge is illustrated, wherein in lieu of the hinge 13 the hooked type hinge 26 is provided including a hook portion 27 which is secured to and depends from the forward end of the upper section 11 and a slotted tongue 28 which rises from the forward end of the bottom section 12 and which is provided with an elongated slot 29 to receive the hooked end of the hook portion 27 to hingedly connect the sections 11 and 12.

Various other modifications and changes are likewise contemplated and may obviously be resorted to without departing from the spirit and scope of the invention as hereinafter defined by the appended claims.

I claim as my invention:—

1. An article of the class described comprising a finger stall formed of sections, one of said sections having an enlarged outwardly bowed portion disposed over and out of contact with the finger nail, said sections being arcuately shaped in cross section and being hingedly connected at their forward ends, and yieldable means detachably connected to the rear, free end of one of the sections for engaging around the free end of the other section to yieldably retain the protector in position on the end of the finger.

2. A finger nail protector comprising a stall formed of top and bottom sections hingedly connected at their forward ends, yieldable means detachably connected to the free end of one of said sections for engaging over the free end of the other section for yieldably retaining the stall in position on the end of a finger, said upper section at its forward end being provided with a convex portion disposed over and out of engagement with the finger nail, and said convex portion being provided with a plurality of vent openings, and said bottom section at its forward end being provided with a thickened portion having a concave inner face forming a rest for the finger tip for holding the nail out of engagement with said convex portion.

3. A finger nail protector as in claim 2, said bottom section being provided with an oblong opening in its underside for exposing the ball of the finger.

MYLES B. O'REILLY