June 20, 1944. E. M. BROGDEN ET AL 2,351,596

ART OF MERCHANDISE PACKAGING

Filed July 31, 1940 20 Sheets-Sheet 1

Fig. 1

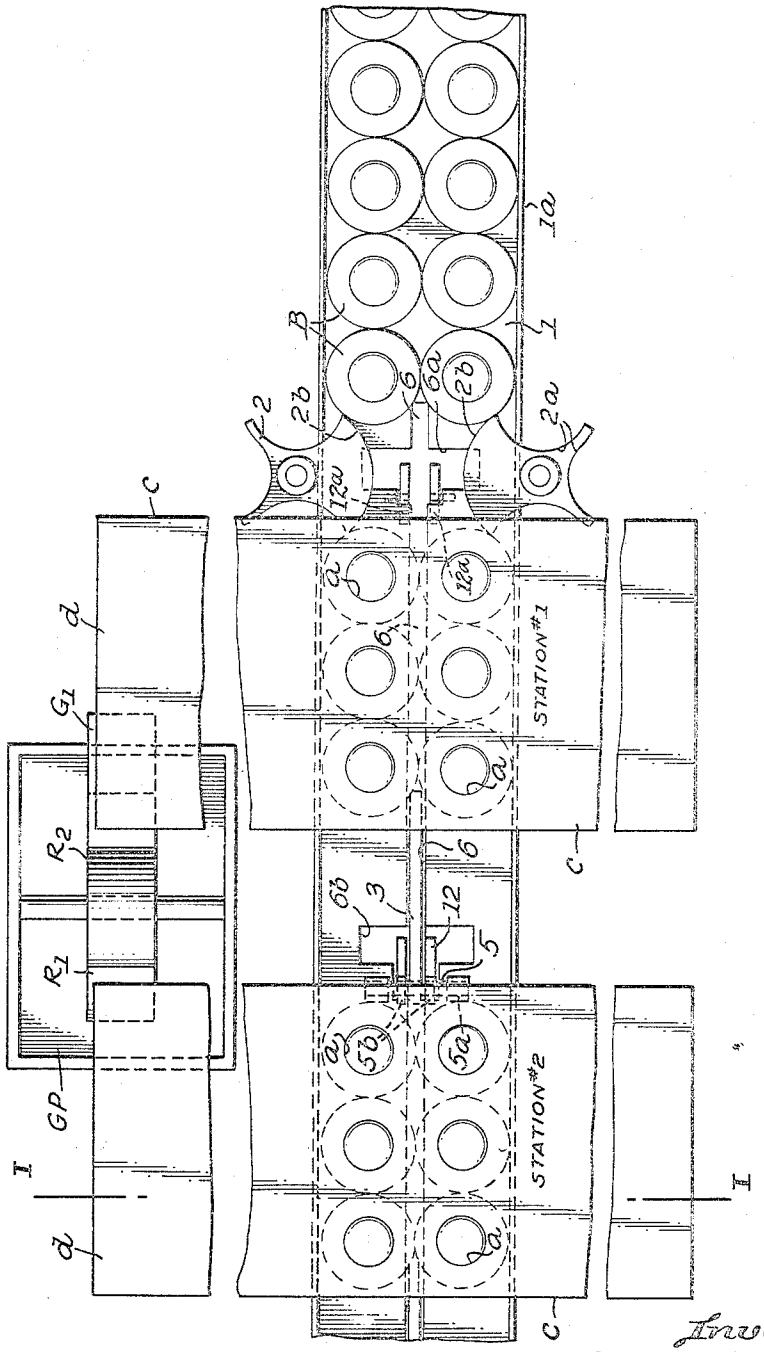


Inventors
ERNEST M. BROGDEN
RONALD R. BROGDEN
By Roy J. Steward
Attorney.

June 20, 1944. E. M. BROGDEN ET AL 2,351,596

ART OF MERCHANDISE PACKAGING

Filed July 31, 1940 20 Sheets-Sheet 2

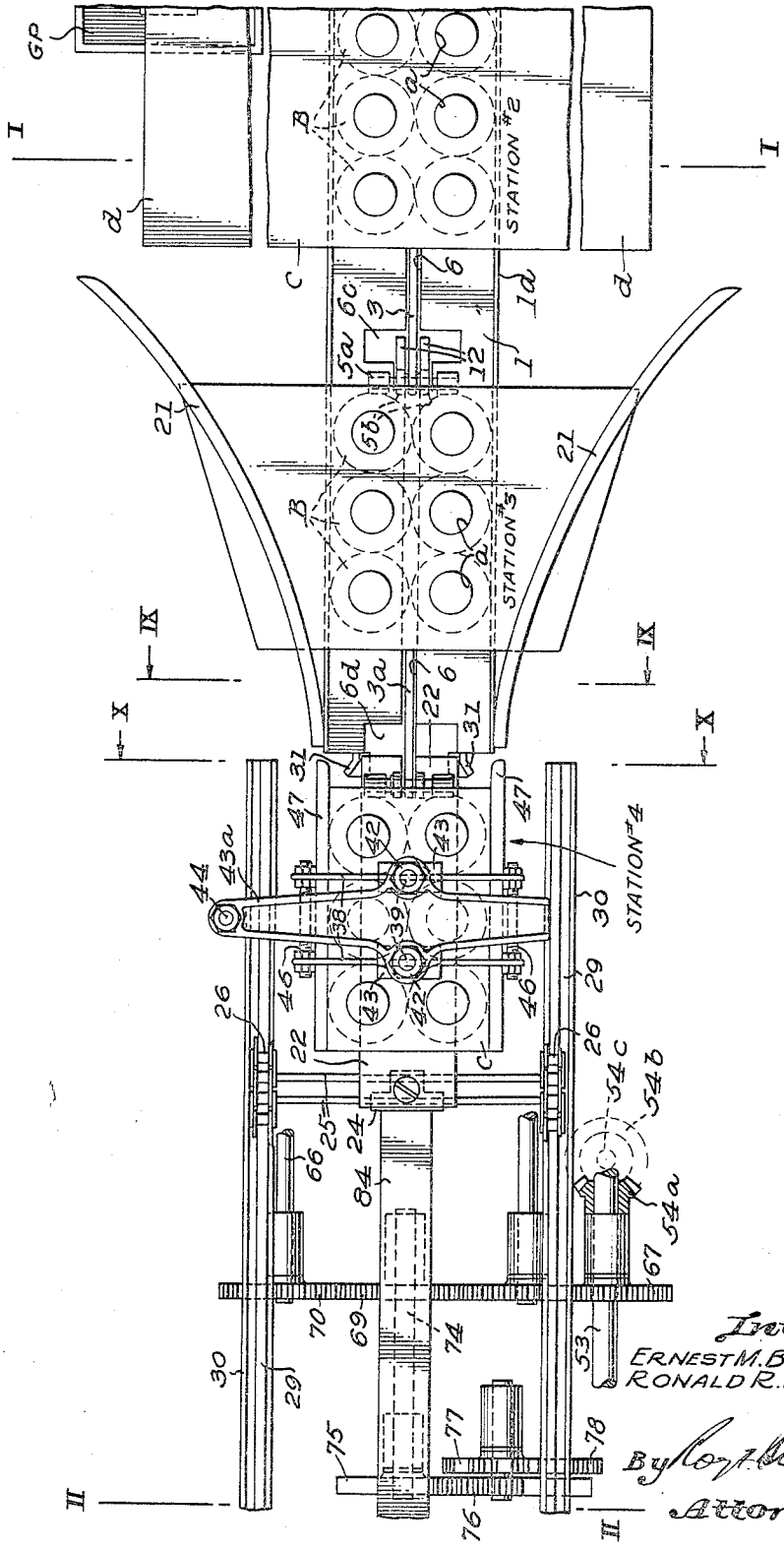


Fig. 2

Inventors.
ERNEST M. BROGDEN
RONALD R. BROGDEN
By Roy J. Stewart
Attorney.

June 20, 1944. E. M. BROGDEN ET AL 2,351,596

ART OF MERCHANDISE PACKAGING

Filed July 31, 1940 20 Sheets-Sheet 3

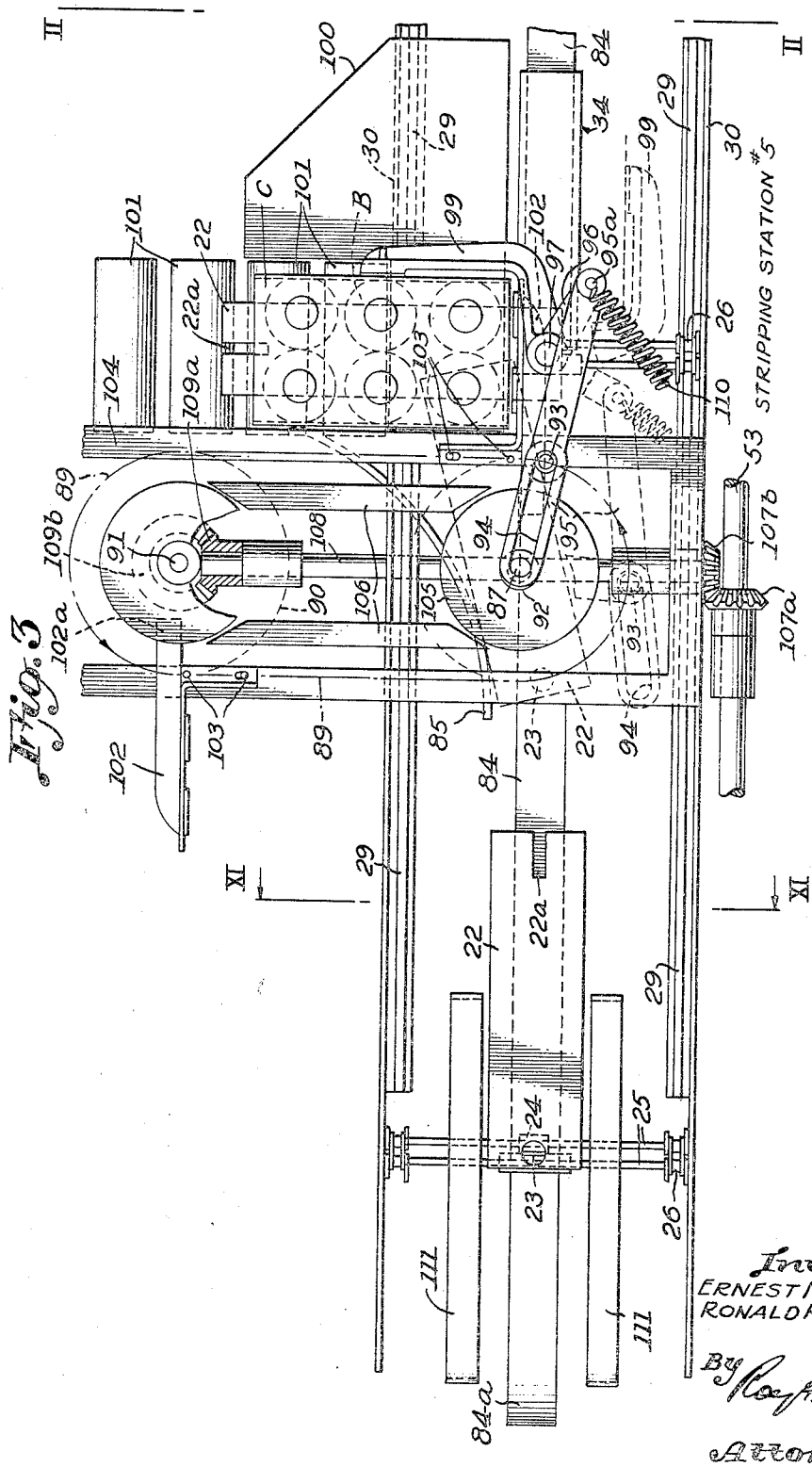


Fig. 3

Inventors.
ERNEST M. BROGDEN
RONALD R. BROGDEN
By Ray F. Townsend
Attorney.

June 20, 1944. E. M. BROGDEN ET AL 2,351,596

ART OF MERCHANDISE PACKAGING

Filed July 31, 1940 20 Sheets-Sheet 4

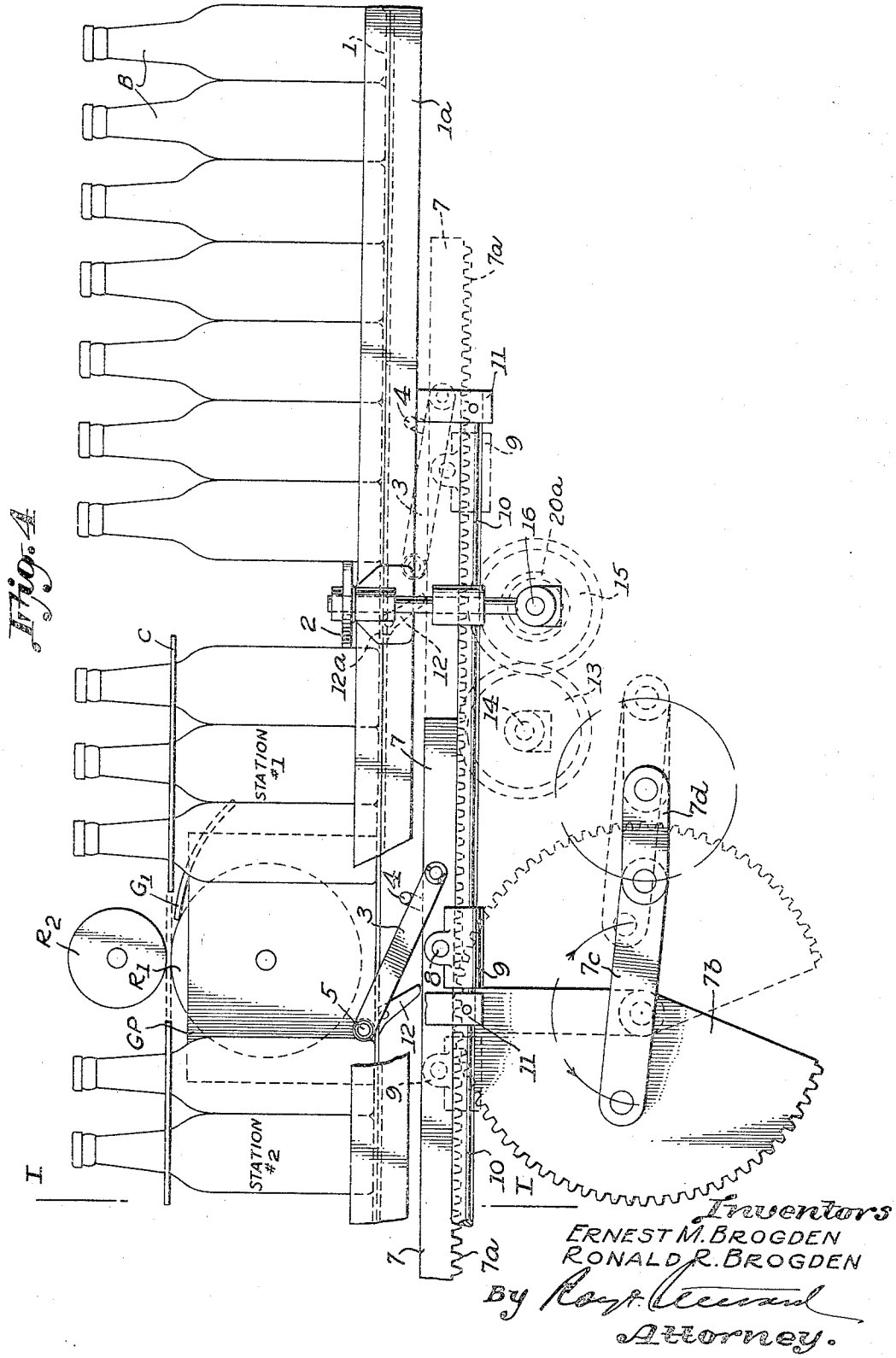


Inventors
ERNEST M. BROGDEN
RONALD R. BROGDEN
By Roy F. Steward
Attorney.

June 20, 1944. E. M. BROGDEN ET AL 2,351,596

ART OF MERCHANDISE PACKAGING

Filed July 31, 1940 20 Sheets-Sheet 5

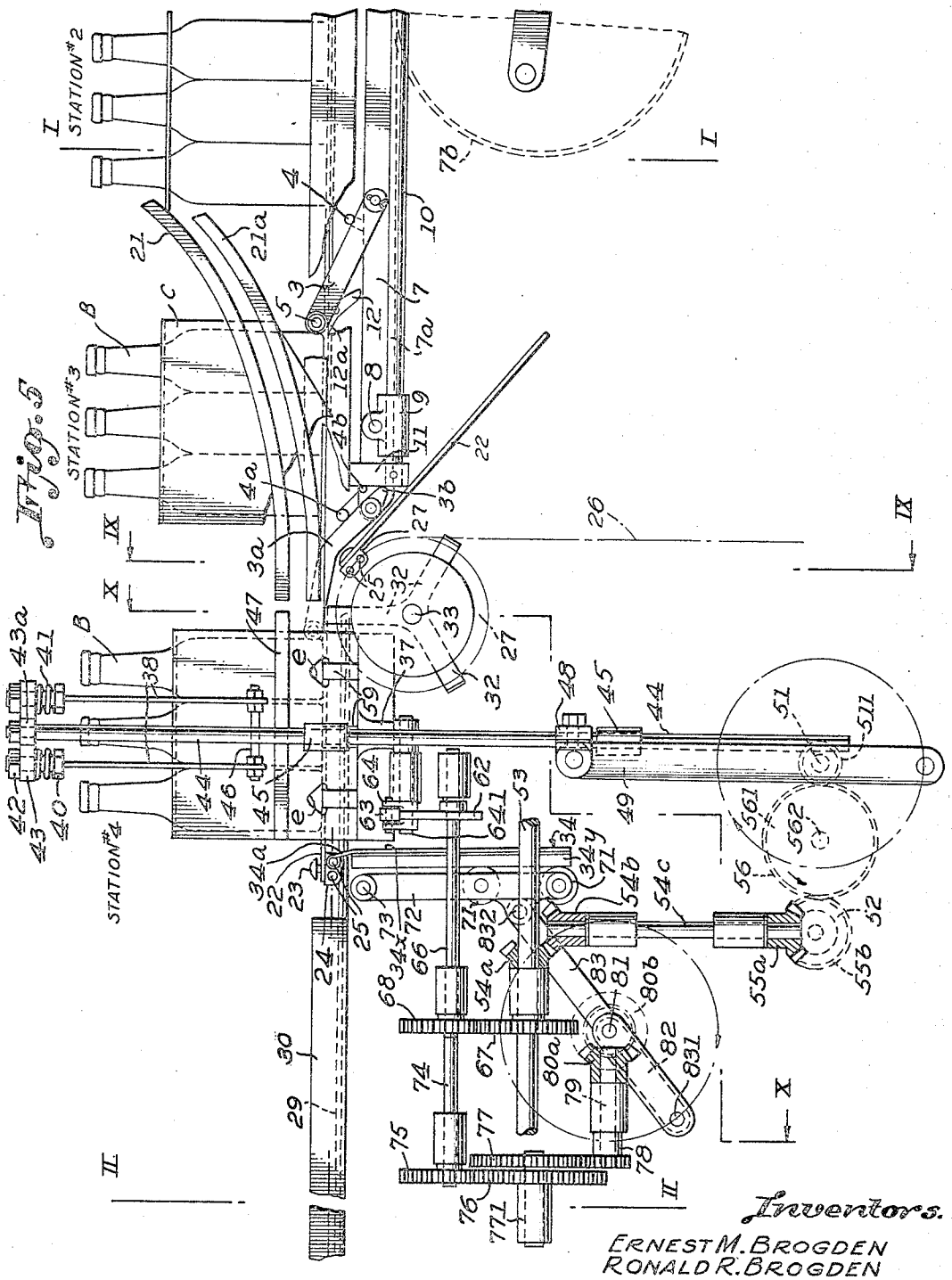


Fig. 5

Inventors.
ERNEST M. BROGDEN
RONALD R. BROGDEN
By Roy F. Steinmetz
Attorney.

June 20, 1944. E. M. BROGDEN ET AL. 2,351,596

ART OF MERCHANDISE PACKAGING

Filed July 31, 1940 20 Sheets-Sheet 6

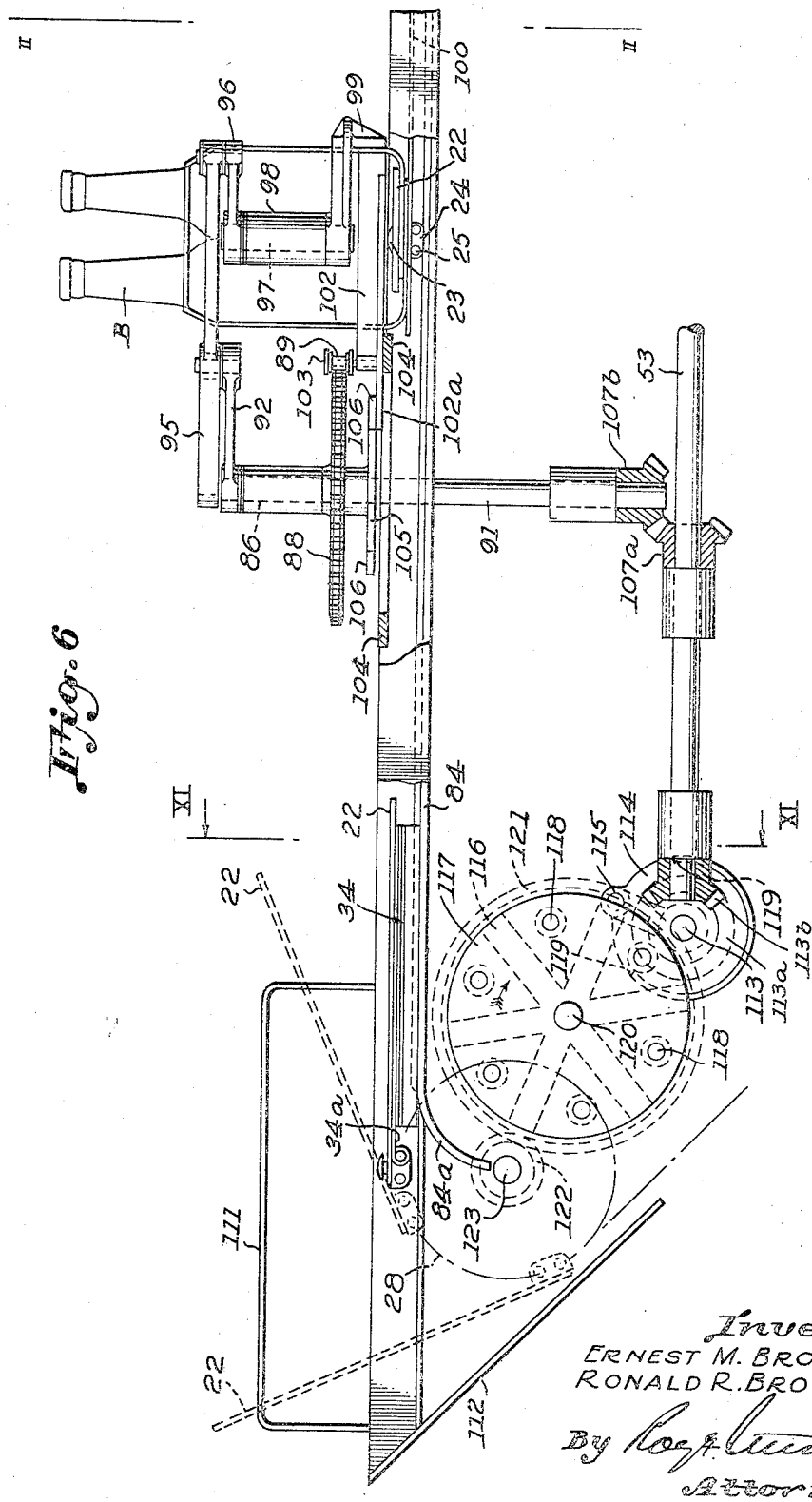


Fig. 6

Inventors.
ERNEST M. BROGDEN
RONALD R. BROGDEN
By Roy J. Mumford
Attorney.

June 20, 1944. E. M. BROGDEN ET AL 2,351,596

ART OF MERCHANDISE PACKAGING

Filed July 31, 1940 20 Sheets-Sheet 7

Fig. 8A

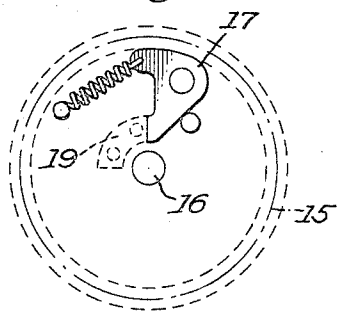


Fig. 7




Fig. 8

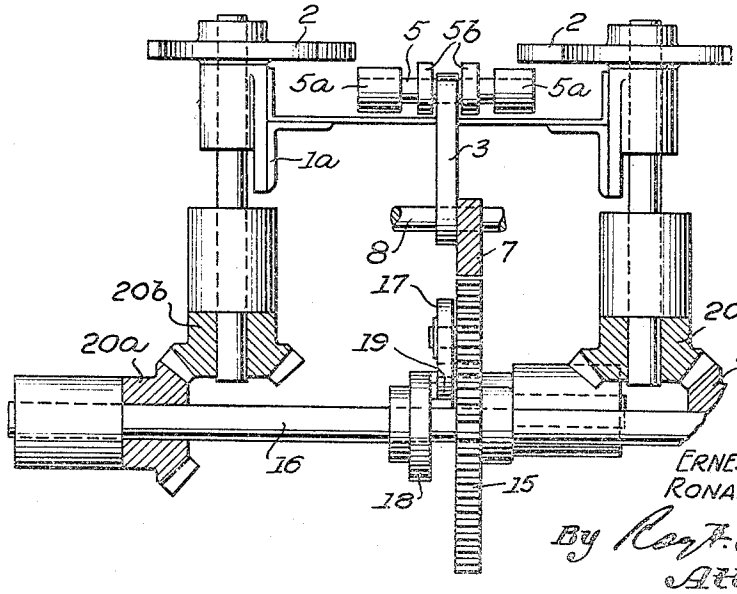


Inventors.
ERNEST M. BROGDEN
RONALD R. BROGDEN
By Roy F. Steward
Attorney.

June 20, 1944. E. M. BROGDEN ET AL 2,351,596

ART OF MERCHANDISE PACKAGING

Filed July 31, 1940 20 Sheets-Sheet 8

Fig. 9

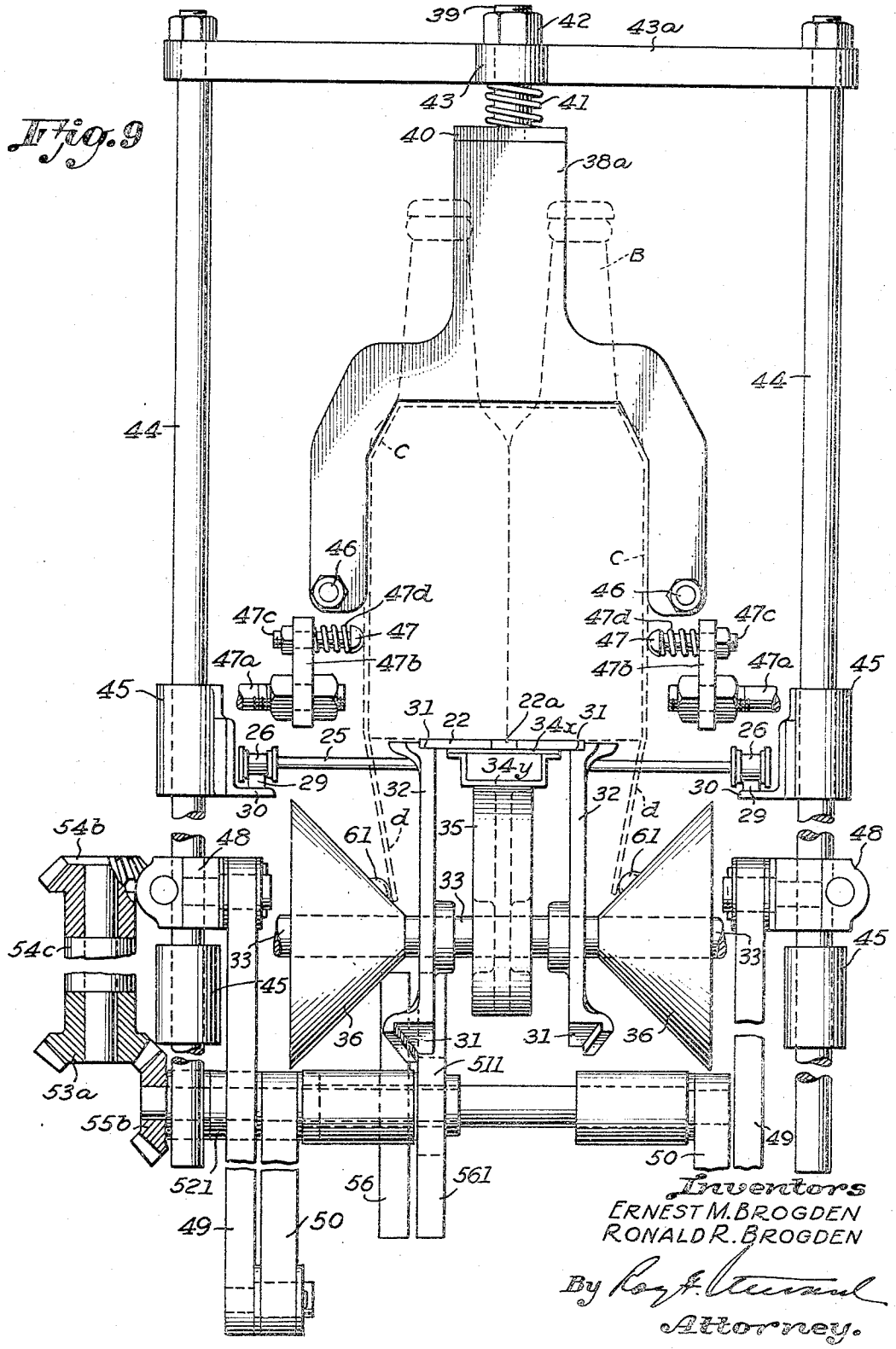


Inventors
ERNEST M. BROGDEN
RONALD R. BROGDEN

By Roy F. Steward
Attorney.

June 20, 1944. E. M. BROGDEN ET AL 2,351,596

ART OF MERCHANDISE PACKAGING

Filed July 31, 1940 20 Sheets-Sheet 9

Fig. 10

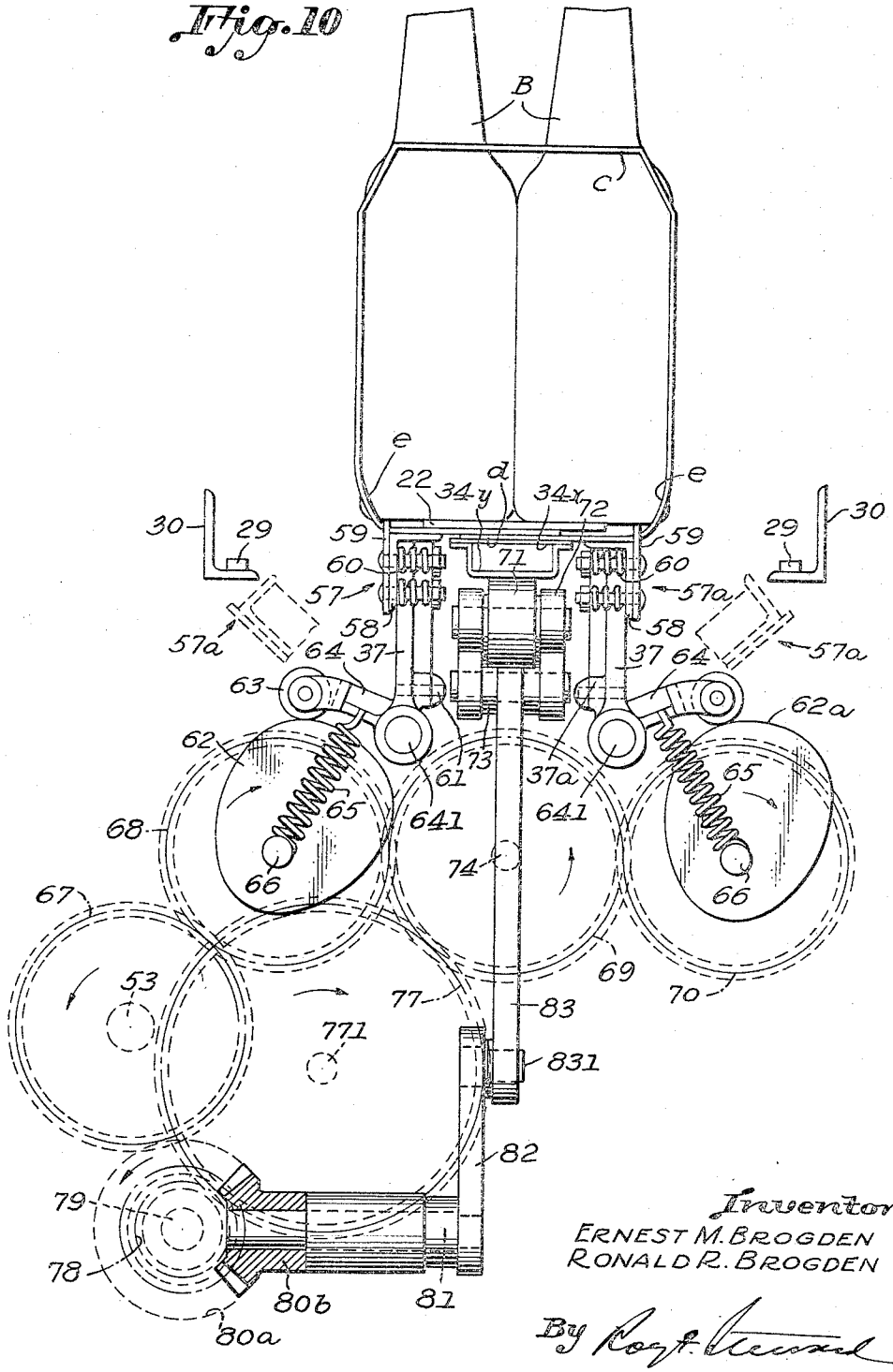


Inventors.
ERNEST M. BROGDEN
RONALD R. BROGDEN

By Roy F. Steward

Attorney.

June 20, 1944. E. M. BROGDEN ET AL 2,351,596

ART OF MERCHANDISE PACKAGING

Filed July 31, 1940 20 Sheets-Sheet 10

Fig. 11

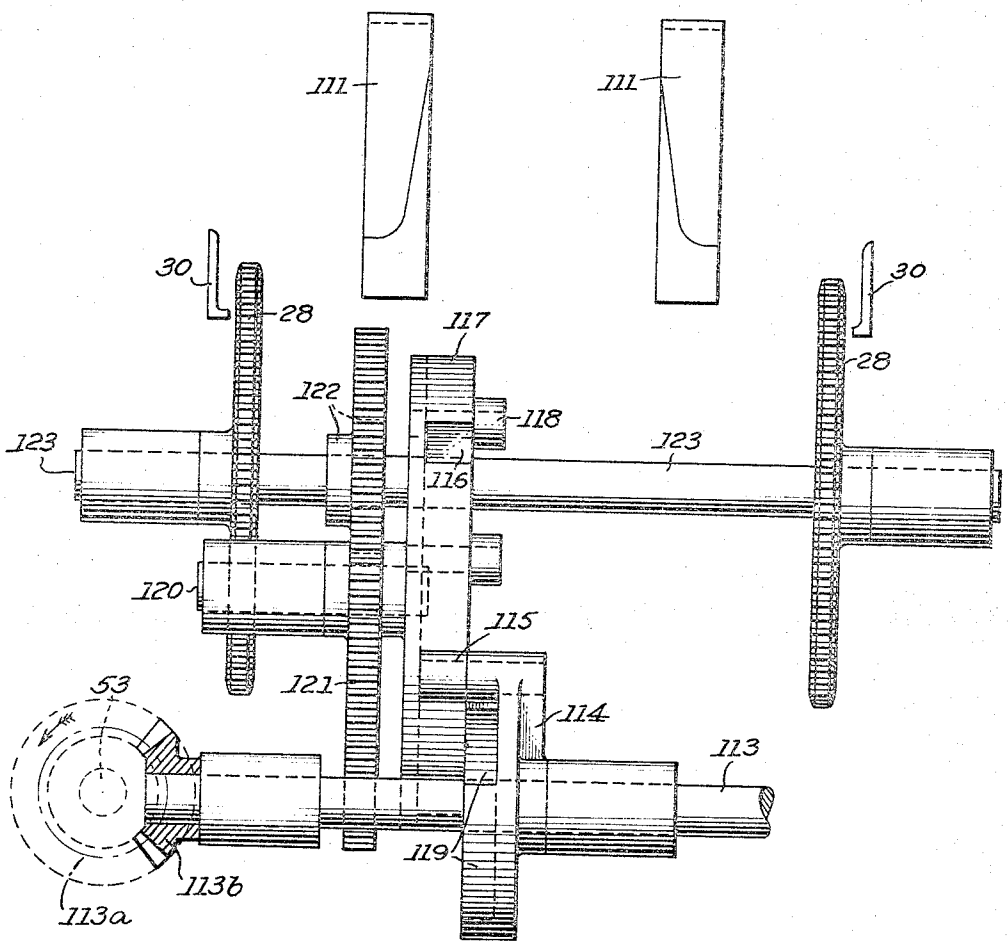


Fig. 12

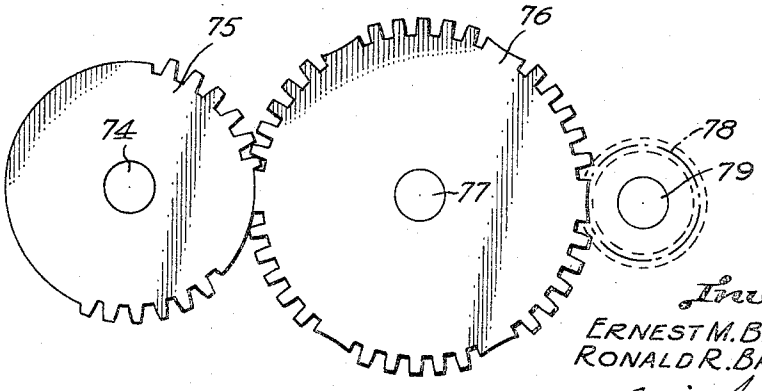


Inventors
ERNEST M. BROGDEN
RONALD R. BROGDEN
By Roy F. Steward
Attorney.

June 20, 1944. E. M. BROGDEN ET AL 2,351,596

ART OF MERCHANDISE PACKAGING

Filed July 31, 1940 20 Sheets-Sheet 11

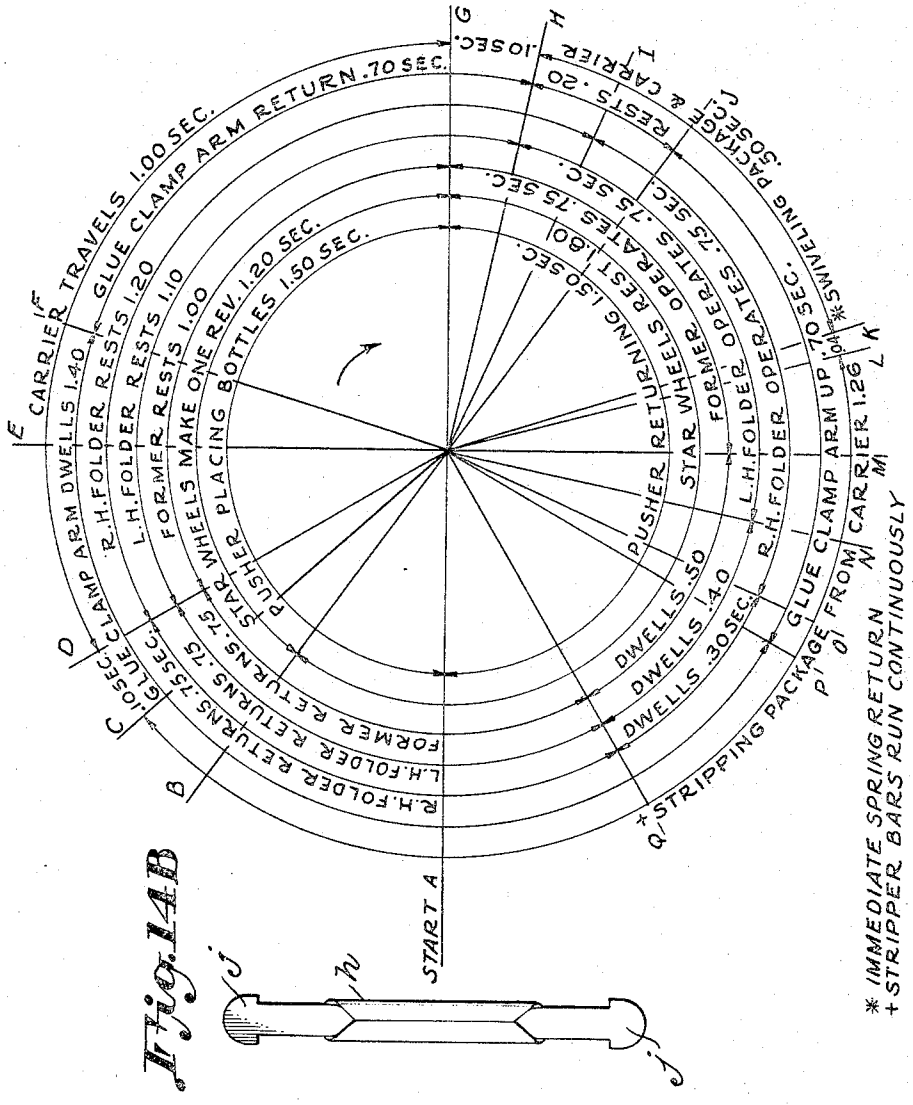


Fig. 14



Fig. 14B

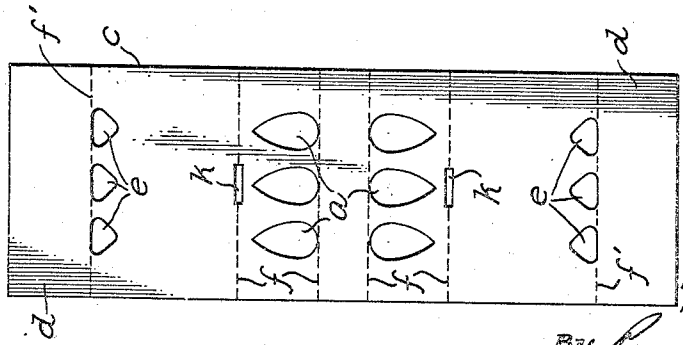

Fig. 14A

Inventors
ERNEST M. BROGDEN
RONALD R. BROGDEN
By Roy A. Stewart
Attorney.

June 20, 1944. E. M. BROGDEN ET AL 2,351,596

ART OF MERCHANDISE PACKAGING

Filed July 31, 1940 20 Sheets-Sheet 12

Fig. 15

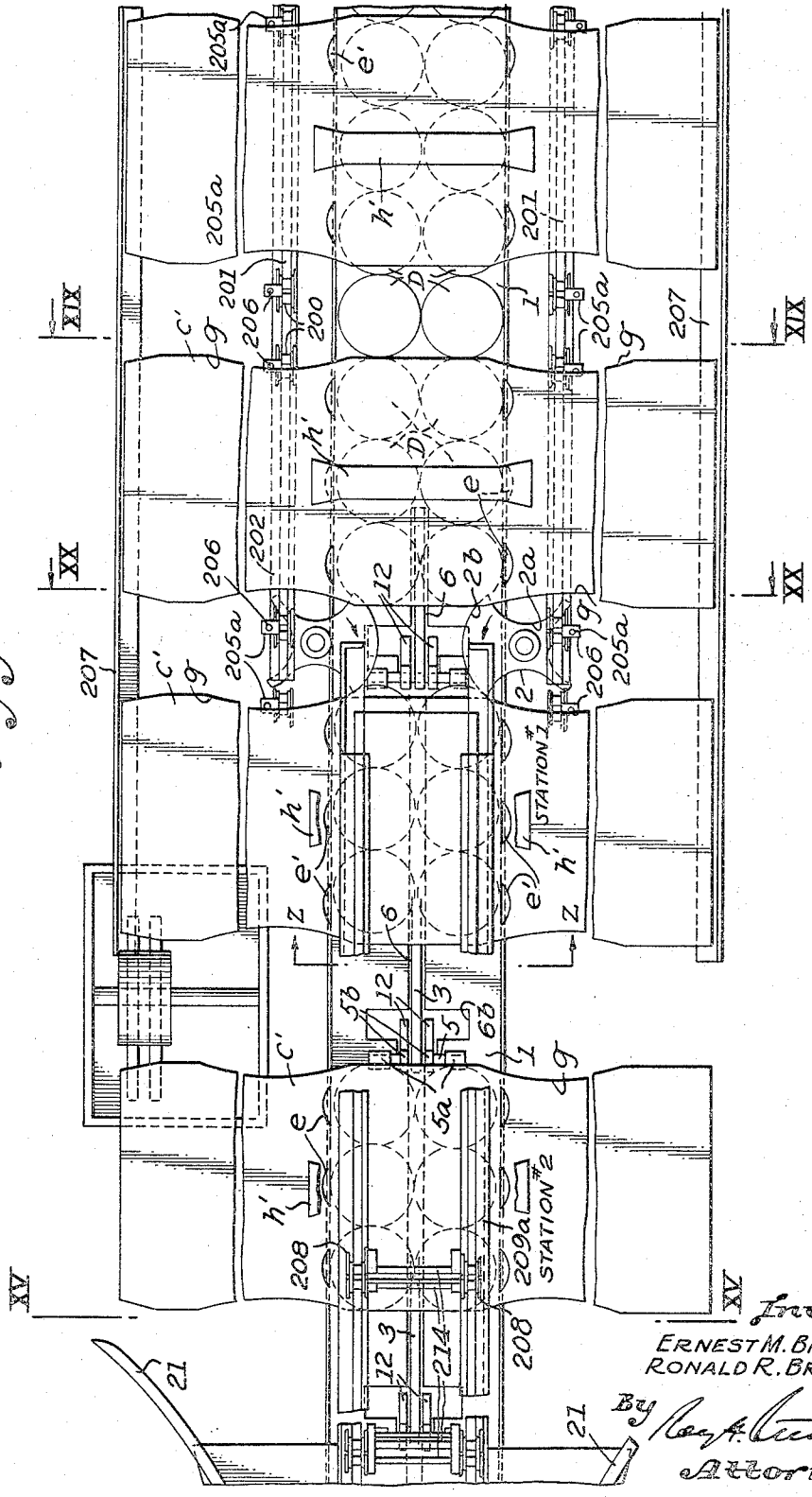


Inventors.
ERNEST M. BROGDEN
RONALD R. BROGDEN
By
Attorney.

June 20, 1944. E. M. BROGDEN ET AL 2,351,596

ART OF MERCHANDISE PACKAGING

Filed July 31, 1940 20 Sheets-Sheet 13

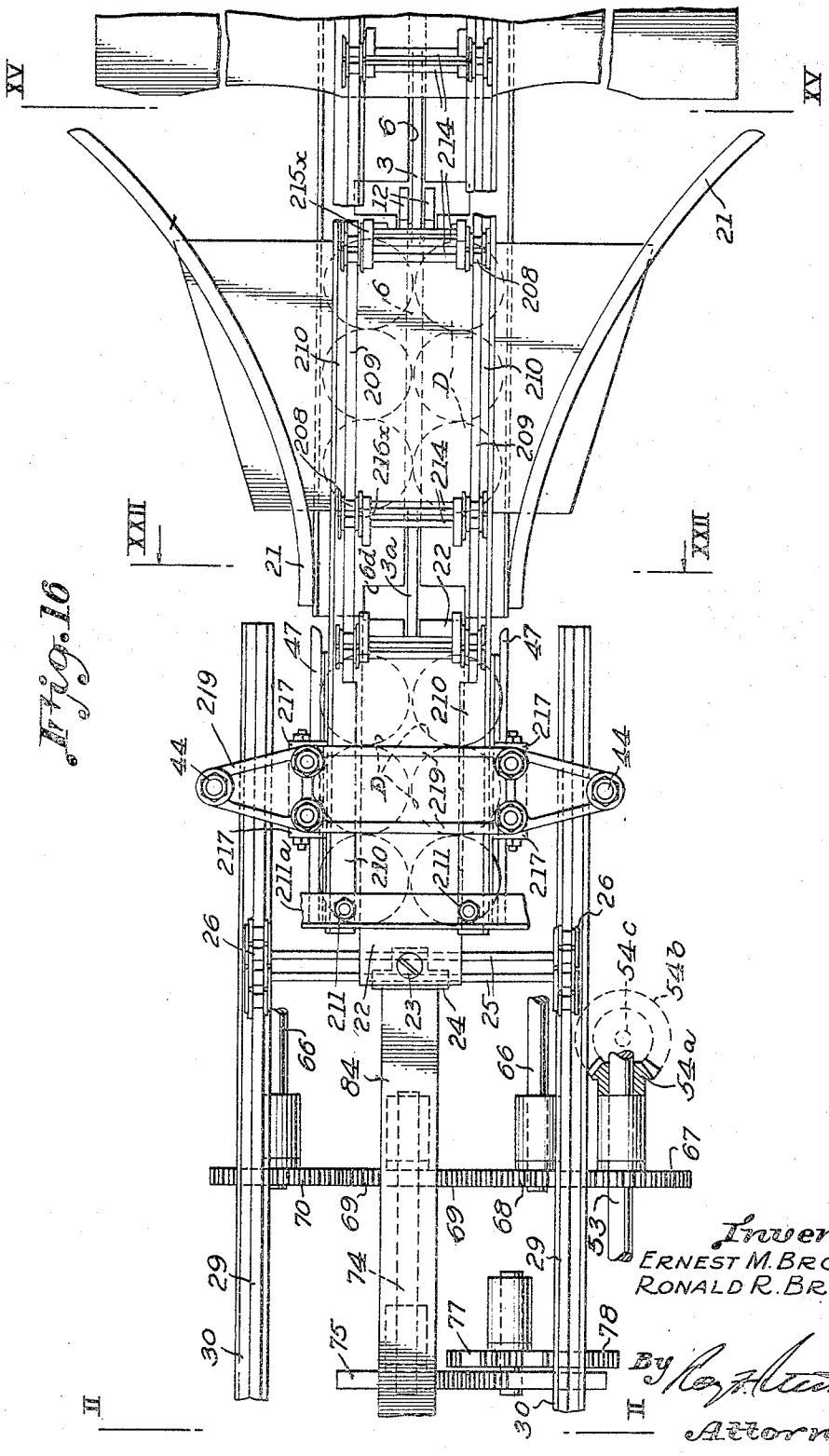


Fig. 16

Inventors
ERNEST M. BROGDEN
RONALD R. BROGDEN

By Roy F. Hammond

Attorney.

June 20, 1944. E. M. BROGDEN ET AL 2,351,596

ART OF MERCHANDISE PACKAGING

Filed July 31, 1940 20 Sheets-Sheet 14

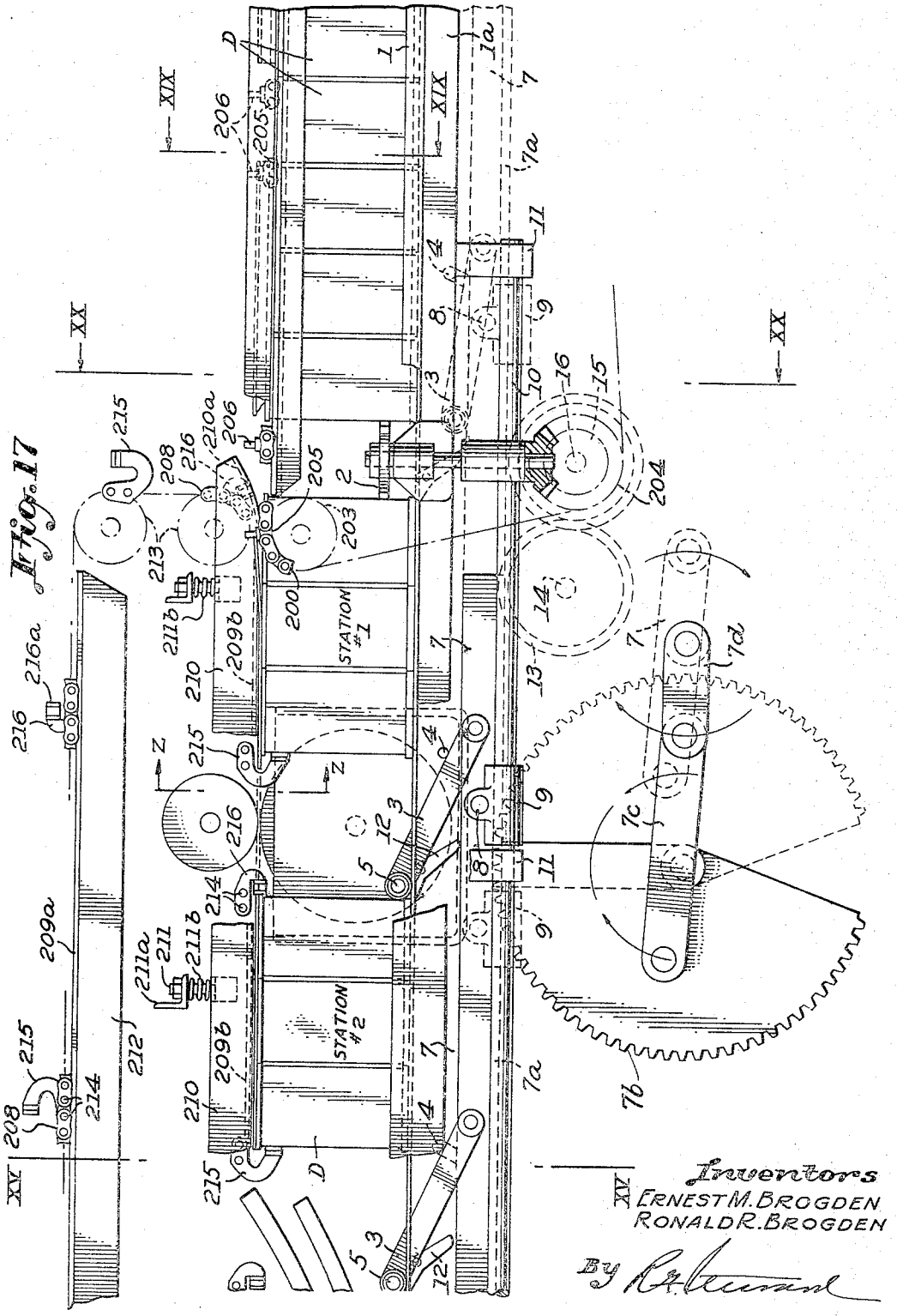


Fig. 17

Inventors
ERNEST M. BROGDEN
RONALD R. BROGDEN

By [signature]

Attorney.

June 20, 1944. E. M. BROGDEN ET AL 2,351,596

ART OF MERCHANDISE PACKAGING

Filed July 31, 1940 20 Sheets-Sheet 15

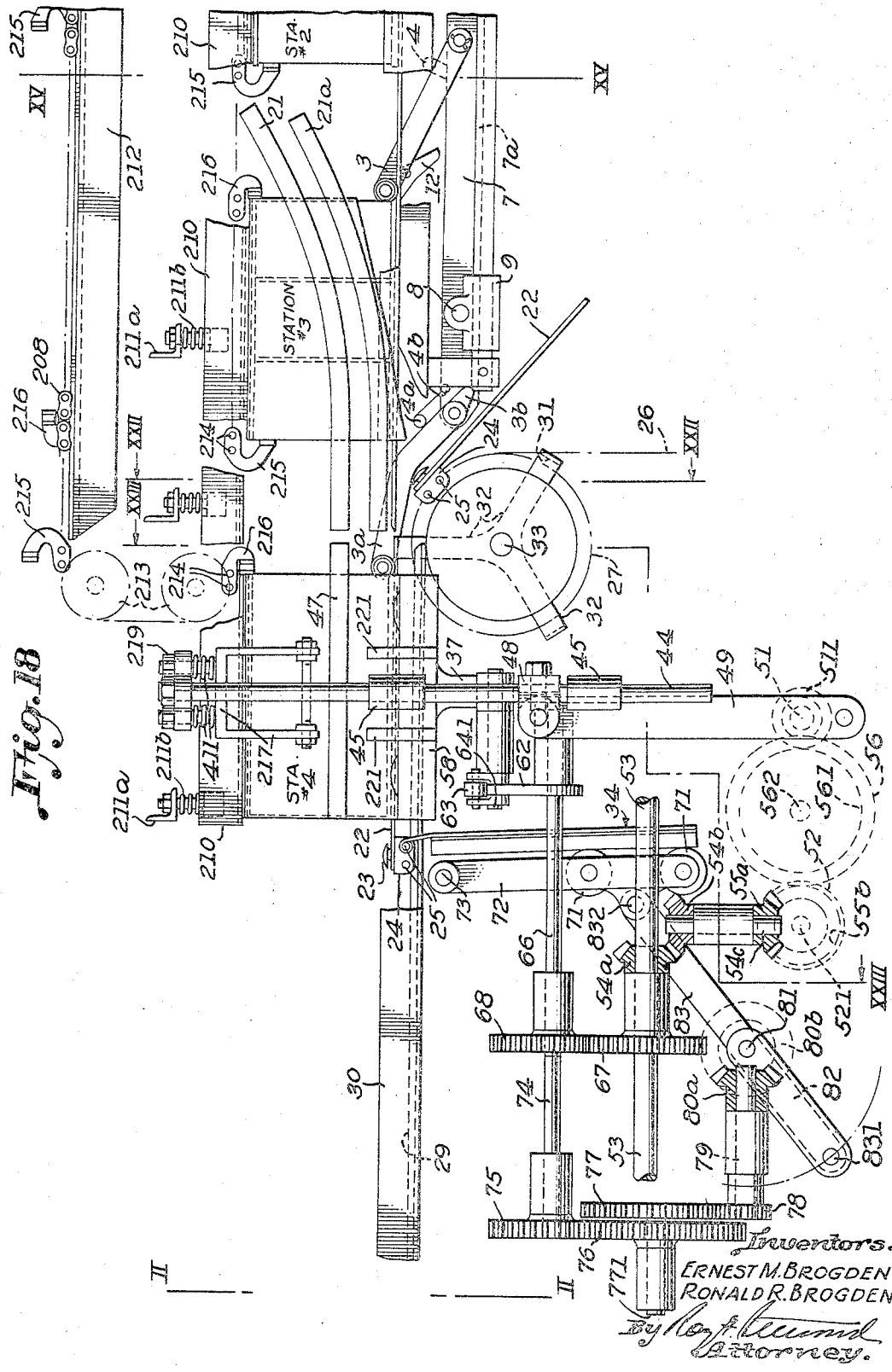


Fig. 18

June 20, 1944. E. M. BROGDEN ET AL 2,351,596

ART OF MERCHANDISE PACKAGING

Filed July 31, 1940 20 Sheets-Sheet 16

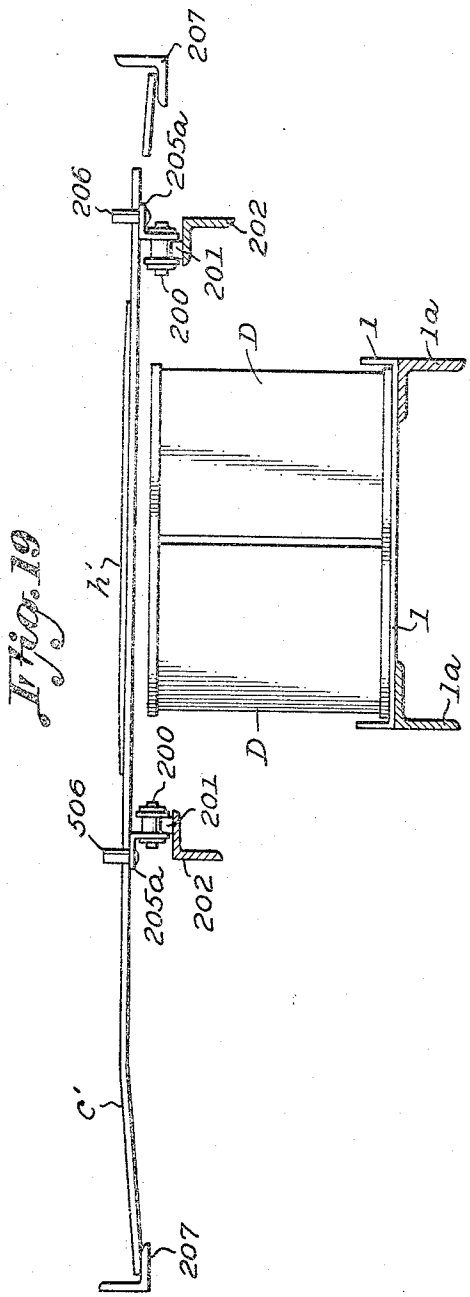


Fig. 19

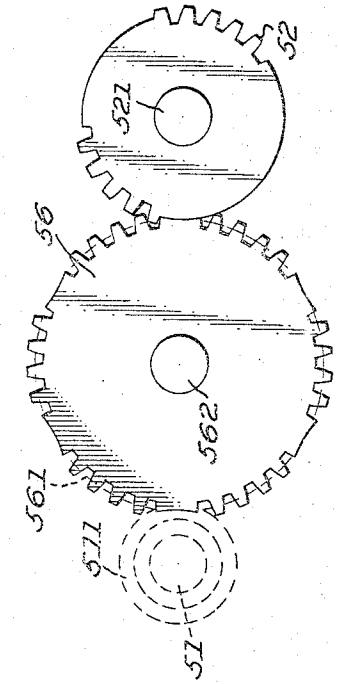


Fig. 13

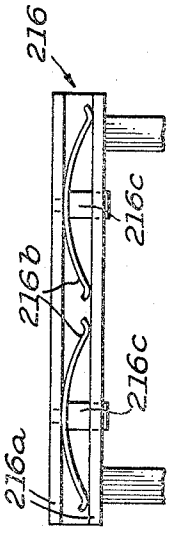


Fig. 21

Inventors.
ERNEST M. BROGDEN
RONALD R. BROGDEN

By Roy A. Stevens
Attorney.

June 20, 1944. E. M. BROGDEN ET AL 2,351,596

ART OF MERCHANDISE PACKAGING

Filed July 31, 1940 20 Sheets-Sheet 17

Fig. 20

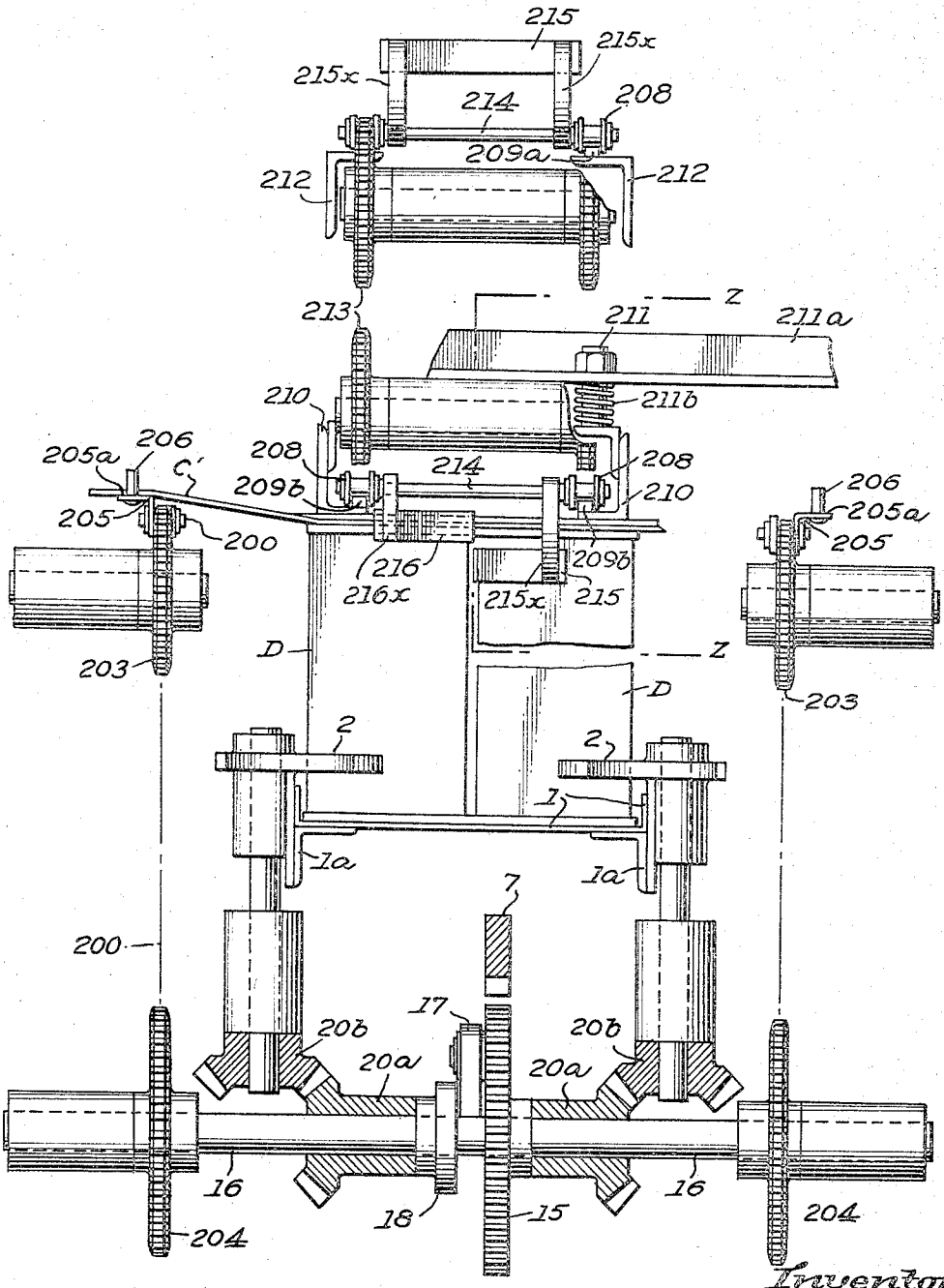


Inventors.
ERNEST M. BROGDEN
RONALD R. BROGDEN

By Roy F. Steward
Attorney.

June 20, 1944. E. M. BROGDEN ET AL 2,351,596

ART OF MERCHANDISE PACKAGING

Filed July 31, 1940 20 Sheets-Sheet 18

Fig. 22

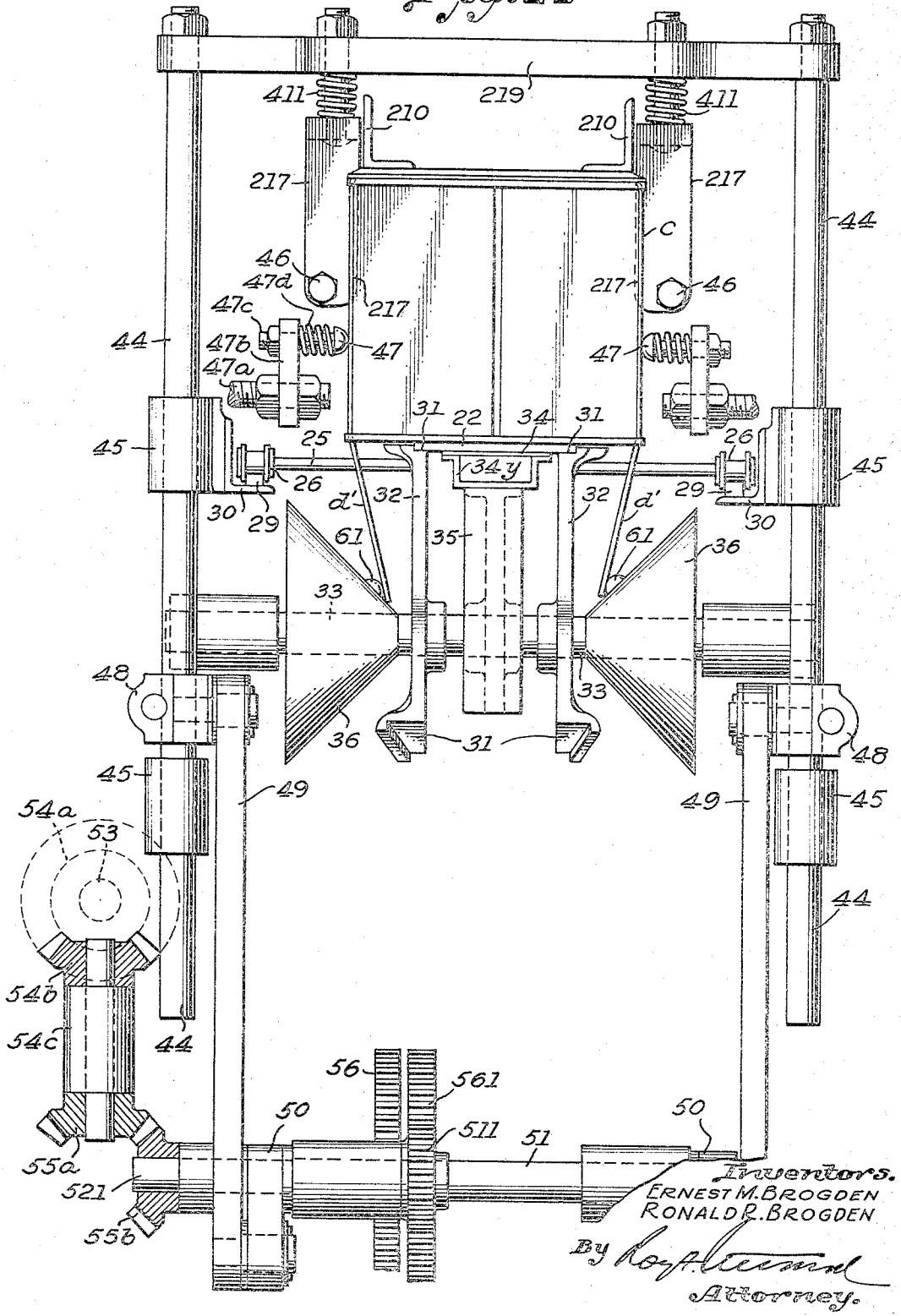


Inventors.
ERNEST M. BROGDEN
RONALD R. BROGDEN
By Roy A. Stewart
Attorney.

June 20, 1944. E. M. BROGDEN ET AL 2,351,596

ART OF MERCHANDISE PACKAGING

Filed July 31, 1940 20 Sheets-Sheet 19

Fig. 23

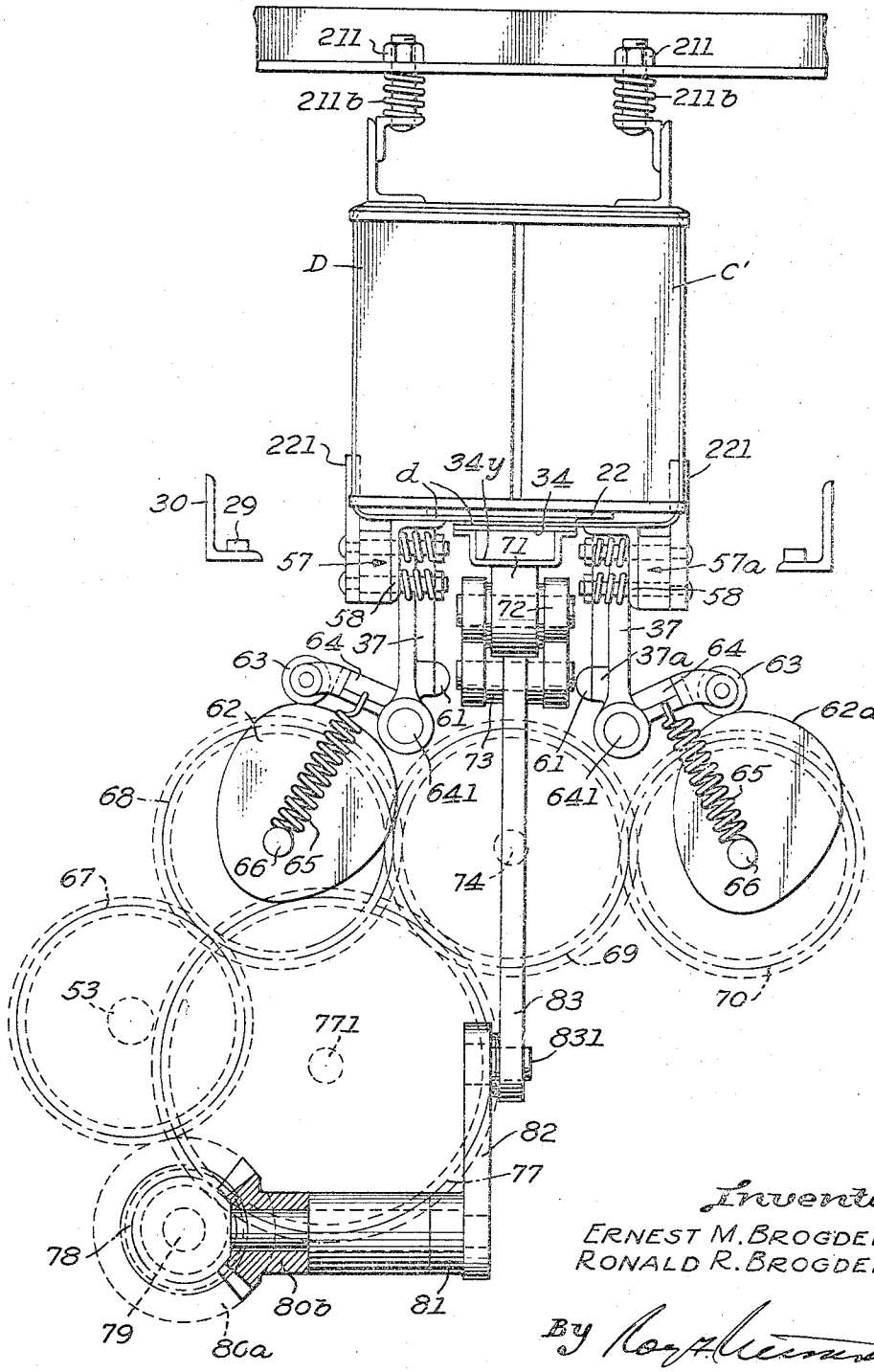


Inventors.
ERNEST M. BROGDEN
RONALD R. BROGDEN
By Roy A. Hammond
Attorney.

June 20, 1944. E. M. BROGDEN ET AL 2,351,596

ART OF MERCHANDISE PACKAGING

Filed July 31, 1940 20 Sheets-Sheet 20

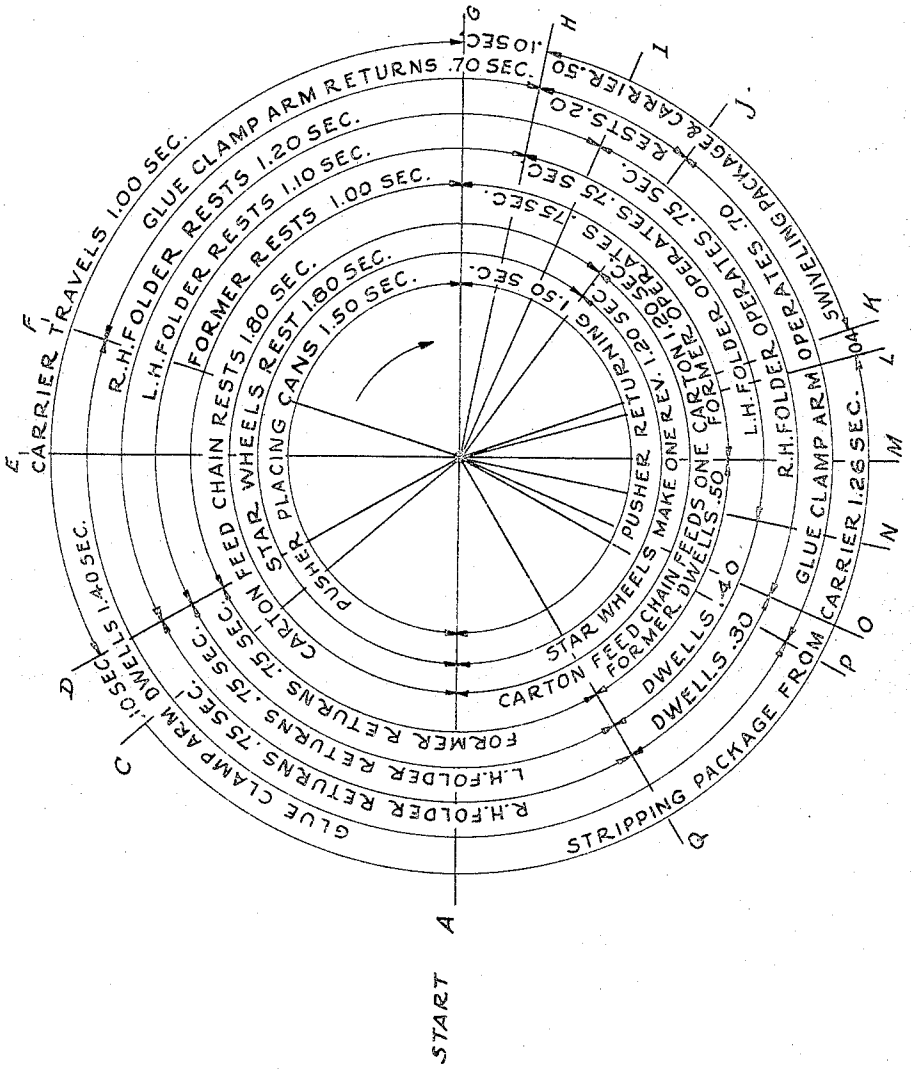


Fig. 24

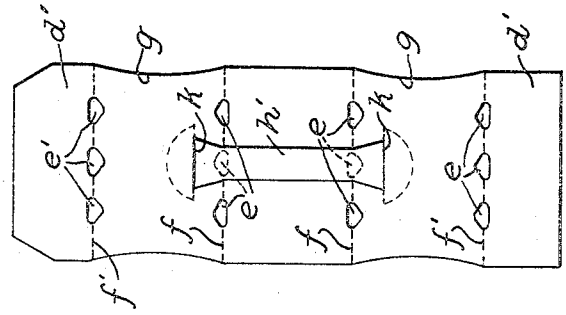


Fig. 25

Inventors.
ERNEST M. BROGDEN
RONALD R. BROGDEN

By Roy A. Hammond
Attorney.

Patented June 20, 1944

2,351,596

# UNITED STATES PATENT OFFICE

2,351,596

## ART OF MERCHANDISE PACKAGING

Ernest M. Brogden and Ronald R. Brogden, Savannah, Ga., assignors to Duz-Pak Corporation, Savannah, Ga., a corporation of Florida

Application July 31, 1940, Serial No. 348,870

27 Claims. (Cl. 93—2)

This invention relates to art of merchandise packaging; and it relates more particularly to methods of and apparatus for enclosing or confining a consumer-unit number (i. e. a small plurality) of merchandise articles of uniform size and shape in a carton carrier, in order to form a package of convenient size and weight for sale to retail customers. Typical of such merchandise articles are bottled and canned goods, and the invention is concerned more particularly with consumer-unit packaging of such goods. The principles of the invention are applicable to packaging goods of other specific description, however, where the articles in question are characterized by uniformity of size and shape, especially articles which, like bottles and cans, are columnar or, more specifically, cylindrical in general form, have at least one flat end or base and are substantially rigid.

According to the method of the invention, a carton blank, in the form of a strip or band which may take various specific forms but may be broadly defined as rectangular in general outline, is snugly folded or formed about the lateral faces of a consumer-unit plurality or group of columnar articles to be packaged, while they are positioned and held in one or more rows extending transversely of the blank; the ends of the blank are overlapped and suitably secured together to form an open-ended tubular carton container having a cross-section which, broadly speaking, is quadrilateral; said container comprising top, bottom and opposed upright portions or sections which, in accordance with the invention, are caused to hug the corresponding faces of the article group that are in series circumferentially and to compactly confine the group so effectively as to prevent accidental dislodgment and escape of articles through the open ends of the container. This confining effect is regulable by regulating the degree of tension exerted upon the carton blank in folding or forming it about the article group, being more pronounced as the tension is increased. Most desirably, achievement of this important objective is further ensured by employing carton blanks provided with apertures adapted to receive and engage, with more or less positive locking action, the angular edges, corners or rims of the columnar articles, at the base in the case of bottles, and at both top and bottom in the case of cans.

Where the articles thus packaged are bottles or cap-sealed cans of usual type, their neck portions project through apertures provided for that purpose in the top section of the carton blank; but it is to be understood that their sloped shoulder portions, intermediate the projecting necks and the bodies proper, constitute broadly one of the before-mentioned "lateral faces" (i. e. the top) of the article group, within the meaning of this expression as employed herein.

Therefore, whether composed of columnar articles that have tapering neck portions or are flat at both ends, the article group and the completed package comprising the same may be said to be generally rectangular and, more specifically, to approximate the form of a rectangular parallelepiped.

In certain specific embodiments which are herein more particularly disclosed but to which, it is to be understood, the method of the invention is not limited in its broader aspects, the method includes temporarily spacing a lateral face of the article group slightly away from the carton blank during the circumferential folding or forming operation, whereby to enable easing or relaxing, to a predeterminable and accurately controllable extent, the degree of tensioning of the material of the carton and the snugness with which it finally fits about and confines the article group in the finished package. By properly adjusting that temporary spacing and coordinating it with the degree of stress or tension to which the carton blank is subjected in the aforesaid folding and forming operation, the compactness and structural stiffness or rigidity of the final package unit can be regulated and controlled to a nicety.

Typical apparatus within the scope of the invention, adapted for packaging bottled or canned goods in accordance with a specific embodiment of the novel method of the invention, comprises the following principal essential features in combination: Provision for separating or segregating from a supply of bottles or cans fed to the apparatus in successive consumer units or groups of such articles, six for example, and, with the bottles or cans of each group standing upright in generally rectangular arrangement, advancing these groups one after another into a zone wherein, while the article group rests temporarily upon a horizontally disposed flat plate-like support which directly contacts the flat ends of the bottles or cans standing upright thereon but does not surround the group, a previously applied and partly folded carton or container blank is pressed down upon the top of the unit, smoothed laterally against opposite upright sides thereof and then folded inwardly to overlap its end margins against the under side of the temporary sup-

porting plate upon which rest the articles comprising the consumer unit or group; the overlapped blank being also suitably fastened together at this zone or station, most desirably by adhesive, to complete the package which is open at opposite ends. The completed package is then advanced beyond the aforesaid station or zone by suitable mechanism and the temporary supporting plate is removed to free the completed package for delivery at any convenient point. Said supporting plate, although thick enough to possess sufficient structural rigidity, is relatively thin. By properly selecting and coordinating its thickness with the degree of force exerted on the carton blank in folding or wrapping it about the assembled article group and supporting plate, the degree of snugness with which the carton conforms to and confines the article group in the completed package, after removal of said supporting plate, can be accurately adjusted and controlled. This is a very important specific feature of the invention from the standpoint of both method and apparatus.

Certain desirable practical apparatus embodiments of the invention are illustrated in the accompanying drawings wherein

Figs. 1, 2, and 3, placed end to end with the lines I—I, and II—II, respectively, in registry, and reading from right to left, show in plan one form of apparatus assembly adapted for packaging bottles, with certain parts omitted for clarity of illustration;

Figs. 4, 5, and 6, placed end to end with the lines I—I, and II—II, respectively, in registry, and reading from right to left as before, show the same apparatus in side elevation with certain parts broken away or omitted for the sake of clarity;

Fig. 7 is an end view, partly in section and on a larger scale, of the pusher bar assembly and certain associated parts viewed from the right in Fig. 4;

Fig. 8 is an end view, on a larger scale and partly in section, of the star wheel mechanism and associated actuating parts, as viewed from the right in Figs. 1 and 4;

Fig. 8—A is a detail of a pawl device forming a part of the mechanism shown in Fig. 8;

Fig. 9 is a view in end elevation, on a larger scale, condensed vertically, of the carton-forming unit illustrated in Figs. 2 and 5, looking in the direction of the arrows on line IX—IX, with certain parts omitted;

Fig. 10 is a view in end elevation, on an enlarged scale, of parts illustrated in Figs. 2 and 5 looking in the direction of the arrows on the line X—X, with certain parts omitted, and with the glue clamp in elevated position;

Fig. 11 is a simplified end view in elevation, on an enlarged scale, showing the drive mechanism for the carriers and the carrier guides, illustrated in Figs. 3 and 6, looking in the direction of the arrows on line XI—XI;

Figs. 12 and 13 are detailed views of certain gearing employed in the apparatus;

Fig. 14 is a timing diagram explanatory of the operation of the apparatus for packaging bottles;

Fig. 14—A shows, in more complete detail than elsewhere, the carton blank employed in this instance for packaging bottles;

Fig. 14—B illustrates a desirable form of detachable carrying handle adapted for use with said carton blank;

Figs. 15 and 16, placed end to end with lines XV—XV in registry, and reading from right to left, show in plan assembly another form of apparatus within the invention adapted to package flat-top cans, certain parts being omitted for the sake of clarity;

Figs. 17 and 18, placed end to end with lines XV—XV in registry, and reading from right to left as before, show in side elevation the apparatus of Figs. 15 and 16, certain parts again being omitted for the sake of clarity;

Fig. 19 is an end view, on an enlarged scale and partly in section, of the carton blank positioning mechanism and associated parts employed in this embodiment of the invention, as viewed from the right in Figs. 15 and 17, looking in the direction of the arrows on line XIX—XIX;

Fig. 20 is an end view, on an enlarged scale and partly in section, showing certain parts of the apparatus as viewed from the right in Figs. 15 and 17 at the transverse plane represented by line XX—XX; a portion of the view afforded by this Fig. 20, namely, the portion lying to the right of the center line and between lines Z—Z, being an end view looking in the opposite direction, showing certain parts as viewed from the left at the transverse plane represented by line Z—Z of Figs. 15 and 17;

Fig. 21 is a detailed view of one of the locator bars employed in the apparatus;

Fig. 22 is a simplified and enlarged view in end elevation of the carton-forming unit illustrated in Figs. 16 and 18, looking in the direction of the arrows on line XXII—XXII;

Fig. 23 is a simplified and enlarged end view in elevation of certain details of the carton-folding means illustrated in Figs. 16 and 18, looking in the direction of the arrows on line XXIII—XXIII of Fig. 18;

Fig. 24 is a timing diagram explanatory of the operation of the apparatus for packaging flat-top cans;

Fig. 25 is a detailed view of the carton blank and detachable handle used in this instance for packaging flat-top cans.

The apparatus illustrated in Figs. 1 to 14 is adapted to package bottles B, in consumer units of six each, in a carton formed from a generally rectangular blank *c* apertured as indicated at *a* to permit the necks of the bottles to project therethrough when the bottles are accurately positioned to form a unit of two rows of three bottles each and the blank is placed in position on the six-bottle unit as indicated in Figs. 1, 2, 4 and 5; fold lines *f* (Fig. 14—A) being provided adjacent the two rows of apertures *a* to facilitate snugly fitting their margins against the lower neck portions or shoulders of the bottles in folding the blank about the bottle unit. The opposite ends of the blank, which overlap in the completed package, are to be secured together in any suitable manner, in this instance by gluing. It is to be understood that, within the broad scope of the invention, the bottles or other articles may be packaged in a single row; that the group or consumer-unit may consist of more or less than six bottles; and that the securing together of the overlapped ends of the carton or container blank in the completed package may be effected in other ways, as by stapling for example, although gluing is particularly desirable and ordinarily most convenient. In the resultant completed package, the article group or unit as a whole (except for the projecting bottle necks) is thus encircled or enveloped laterally (top, bottom and two opposite sides) by the band-like carton container which is tubular in

form, leaving the package open at the opposite ends but confining the bottles sufficiently to prevent their accidentally falling out of the container in the course of the handling to which such packages are normally subjected.

In addition to the aperturing *a* for the bottle necks, the carton blank is in this instance also apertured at *e* along fold lines *f'*, which define the container bottom, as indicated in Fig. 14—A, to permit the base of each bottle to project laterally somewhat beyond the bottom of the formed carton as indicated in Fig. 10. In the specific form here illustrated, the completed package includes a carrying handle which, as shown in Fig. 14—B, consists of a handle strip or grip *h* provided with barbed locking ends *j* adapted to be engaged in slits *k* as shown in Figs. 14—A and 14—B. The apparatus here specifically illustrated is of such character that these handles may be assembled with the carton blanks, in advance of the packaging operation, without interfering with the proper operation of the machine; although they may be inserted after the package has been formed.

Generally described, the bottle-packaging apparatus in the form here illustrated may conveniently be regarded as comprising five operating zones or stations indicated by a corresponding reference numeral in Figs. 1 to 6, inclusive, of the drawings. At station #1, the preselected and segregated group or consumer unit of six bottles is initially positioned, and a carton blank is superimposed thereon. The group is then advanced by appropriate means to station #2, and during this movement a suitable adhesive or glue is applied to the under side of one of the end margins *d* of the carton to be overlapped in the finished package. In this glue-applying operation, margin *d* passes over and in contact with the periphery of a glue roller $R_1$ rotatably mounted in glue pot GP, being pressed against the glue roller by another roller $R_2$. Auxiliary guide means for the margin of the carton to which the glue is applied is provided by member $G_1$ which properly directs the margin between rollers $R_1$, $R_2$, as the carton progresses to station #2.

Station #3 marks an intermediate stage in the forming of the carton blank at which the blank has been partially folded in by guides **21** against the opposite vertical sides of the bottle group in the course of the latter's movement from station #2. During the movement of the group from station #3 to station #4, this inward folding of the blank against these sides of the bottle group is completed.

At station #4, the article group is received on a special type of carrier in the form of a flat plate **22**, upon which the bottles rest directly and without being laterally confined thereby. While the group is at this station, appropriate mechanism acts on the carton blank to press it snugly down against the bottle shoulders and also to smooth and press it firmly against the sides of the bottle group; and further mechanism functions to fold the ends *d* of the blank inwardly under the aforesaid supporting plate or carrier and into such overlapping relation that the glued end margin properly overlaps the other margin to form a joint which, in the specific embodiment of the invention here shown, may then be firmly held in place by the action of a glue clamp indicated generally at **34** and arranged to be moved up into pressure-applying position underneath the assemblage. The flat carrier plate presents a smooth under surface against which the overlapped carton blank ends are pressed by the glue clamp, thus ensuring a firm continuous glued joint.

The complete package assemblage, with the container bottom still held between the carrier plate and the glue clamp (where the clamp is employed), then passes to station #5, the design and operation of the apparatus being such that sufficient time is allowed for this passage to permit proper setting of the adhesive. If desired, the apparatus may include provision for applying heat to the glued joint at this stage to hasten setting.

At station #5 the completed package may be removed in any suitable manner, either manually or, as in the specific form of the apparatus here illustrated, by appropriate means provided to effect this automatically, and the package may then be delivered to any desired delivery point.

In case it is desired to secure the overlapped ends of the carton blank together otherwise than by means of an adhesive, appropriate provision may be made for stapling them together, for example, utilizing the carrier plate as anvil or clinching means.

Referring now to further constructional details of the illustrated bottle-packaging apparatus, a generally horizontal chute or guideway **1**, of sheet metal or other suitable material, is provided for feeding bottles filled with beer or other beverage, for example, into the apparatus. These filled bottles may come from the bottling line of a bottling plant and are arranged into a double file in the chute by an automatic switch, not shown. They are pushed along the chute in upright position by the action of the power conveyor or other means feeding them until they come to suitable selecting and grouping means, comprising in this instance a pair of star wheels **2**. Each of these star wheels has its working periphery formed with three arcuate indentations **2***a* for engaging bottle bodies, and a dwell **2***b*, so arranged that the star wheels act to select six bottles in two rows of three each to form a consumer unit or group, and then to block the stream of bottles until the time arrives to select and advance the next succeeding group of six bottles. The operation and timing of these star wheels to effect this result are referred to in greater detail hereinafter.

Each resultant group of six bottles thus segregated and initially positioned at station #1 is advanced successively to stations #2, #3 and #4 by appropriate advancing mechanism which, although capable of assuming various specific forms, may advantageously be that here illustrated. As here shown, the advancing means comprises two pusher arms **3**, serving the first three stations or zones of operation, and a third pusher arm **3***a* for station #4. Each pusher arm is pivotally secured to a horizontally reciprocable pusher bar **7** for limited angular movement in a vertical plane with respect thereto. Each pusher arm consists of a flat bar mounted with its broader dimension vertical, and a slot **6** is provided in the floor of the chute **1** through which the arms may project and travel lengthwise of the chute in advancing the bottle group from station to station in a manner presently to be described. The upward movement of each arm **3** is limited by a stop **4** mounted on the pusher bar, while said bar itself limits its downward movement. The upward and downward movements of arm **3***a* are limited by stops **4***a*

and 4b, respectively, which are arranged on opposite sides of the pivot point of said arm which has a tail 3b cooperating with stop 4b to limit the downward movement. For a purpose to be referred to later, arm 3a is bent instead of being straight as are arms 3. Each of the pusher arms 3, 3a, is provided at its free end with a contact head consisting in this instance of a rod 5 transversely mounted thereon and carrying rubber cushion or contact thimbles 5a at its ends and rollers 5b intermediate the thimbles, one on either side of the arm.

The reciprocating pusher bar 7 is mounted below the chute 1 on two cross rods 8, each of which is supported at its ends by sleeves 9, which encircle and are slidable on guide rods 10. The guide rods, in turn, are suspended by hangers 11 from the frame 1a by which chute 1 is carried (Fig. 7). In the drawings, the pusher bar 7 is shown in full lines in its extreme forward position (i. e. toward the left), and in dotted lines in its extreme aft or rear position.

Any suitable means for reciprocating the pusher bar 7 may be employed. In the construction here illustrated, the pusher bar 7 is provided with rack teeth 7a on its lower face, meshing with a gear segment 7b suitably driven in a manner to be further described in detail hereinafter. At a location somewhat in advance of each of stations #1, #2, #3, and #4, the slot 6 in the floor of the chute is widened transversely for a distance sufficient to provide passageway for the pusher contact head (5, 5a, 5b) through the chute floor, these openings being indicated at 6a, 6b, 6c and 6d. Sub-adjacent each of the openings 6a, 6b and 6c is pivotally mounted a pair of angular guide or track members 12 which are aligned with the rollers 5b carried by the pusher contact heads, and which are suitably spaced apart to avoid interference with the arms 3 and 3a. Each of these guide members which normally occupy the full line position shown in the drawings (e. g. Fig. 4), has a tail or extension 12a adapted to engage the under side of chute 1 and thereby prevent said member from rotating clockwise from this normal position.

When the pusher bar 7 is in its rearmost position as indicated in dotted lines in Fig. 4, each of the arms 3 and 3a is in its lowermost position, below chute 1, as is indicated in dotted lines for the first of the pusher arms 3. As the pusher bar and pusher arms move forward from this extreme rear position, the rollers 5b of the pusher heads ride up over the inclined guides 12, thus elevating the pusher arm heads through the aforesaid openings 6a, 6b, and 6c, respectively, and into contact with the corresponding respective groups of bottles to be advanced from stations #1, #2 and #3. Continued forward movement of the pusher bar and arms therefore moves each bottle group forward for the desired distance, that is, to the next succeeding station; which distance predetermines the length of stroke to be given the pusher bar. The normal tendency of the pusher arm heads to ride up vertically on the end bottles of a group, as the group is thus pushed forward, is prevented by stops 4, 4a, already referred to. This advancing movement continues until the full line position of the pusher bar and arms is reached.

Taking the first of the three pusher arms of the series as typical, that is, the one nearest the feeding-in end of the apparatus (i. e. at the right in the drawings), it will thus be seen that in the described forward movement of the pusher bar 7, the pusher arm head is elevated through opening 6a, contacts the bottle group shown at station #1 and pushes it into the position indicated at station #2, the arm itself traveling through slot 6 during this pushing movement and the pusher head going somewhat beyond the opening 6b. Each of the other pusher arms and heads performs the same corresponding movement in its respective location.

Again referring to the first pusher arm and head as typical, it will be seen that upon the reverse movement of pusher bar 7 toward the rear (to the right in the drawings), the pusher head will drop through opening 6b, riding down the guides 12 provided at that point and returning underneath the chute 1 until the pusher arm and head reach the dotted line position shown at the right in Fig. 4, the pivoted guides 12 at station #1 swinging upwardly, when contacted by the pusher head in its return stroke, to permit the pusher head to pass underneath them in performing this movement and then returning by gravity to their normal position shown in the drawings. The cycle having been thus completed, each pusher arm and head is ready to repeat the same movement over and over again to advance the bottle groups intermittently from station to station.

It is to be noted that no pivoted guides 12 are provided subjacent the opening 6d. This is because at this location such guides would interfere with the progression of carrier plates 22. Furthermore, since there is no ascending movement of pusher arm 3a and head at this point, no guide means for such movement is necessary. For guiding the descending or returning movement of pusher arm 3a and its head through opening 6d, whichever carrier plate 22 is below the opening 6d at the time serves.

Since the operation of the star wheels 2 in selecting and segregating bottle groups of six each must be properly timed in relation to the advancing of the segregated groups through the apparatus, suitable provision is made to ensure such proper timing. This can be accomplished in various ways, but the arrangement here illustrated is particularly convenient and desirable. In this arrangement, a driving connection is provided between the pusher bar and the star wheels such that upon each forward movement of the pusher bar the star wheels are actuated to select and segregate a group of six bottles and position said group as indicated at station #1. This driving mechanism consists of gear 13 which meshes with pusher bar rack 7a and is fast with shaft 14 on which it is mounted; said gear 13 meshing with a second gear, 15, which is loose on shaft 16, but which can drive this shaft, in one direction only, through a pawl mechanism indicated generally at 17 (Figs. 8 and 8A). Keyed to shaft 16 is a disk 18, to which is attached a pawl abutment or contact block 19. When pusher bar 7 has reached the end of its rearward stroke, pawl 17 has traveled, for example, a predetermined desired angular distance beyond pawl abutment 19. As the pusher bar starts its forward stroke, pawl 17 moves back toward the contact block and actually contacts it just as the pusher arm heads contact the respective bottle groups to advance the same. Thus the advancing movement of the bottle groups and the driving of shaft 16 occur simultaneously. Through conventional mitre gears 20a and 20b, the movement of shaft 16 revolves the star wheels to perform the selection, segregation, and

positioning at station #1 of a group of six bottles, one complete rotation of the star wheels being required to accomplish this. On the rearward stroke of the pusher bar, pawl 17 rides over block 19 to return to its initial angular distance from said block, this angular distance corresponding to the time necessary to elevate the pusher arm heads up through the openings in the floor of chute 1 and into contact with the respective bottle groups to be advanced.

Located between stations #2 and #4 are suitable means for pre-forming the sides of the carton container by bending the laterally projecting portions of the carton downwardly and inwardly against two opposed vertical sides of the bottle group. As here shown, such means take the form of two pairs of curved guide members or folders 21, 21*a*, mounted one above another on opposite sides of chute 1; the members of each pair curving inwardly and downwardly in the direction of movement from station #2 toward station #4, and those of the upper pair 21 extending somewhat farther toward station #2 than those of the lower pair 21*a*. Adjacent station #2 the members of each pair are high enough and spaced far enough apart that the pairs 21, 21*a*, in the order named, successively contact the upper side of the opposite lateral margins of the advancing carton blank; and their inward and downward curvature is such that, by the further movement of the bottle group through station #3 to station #4, the carton blank is led or bent inwardly and downwardly against the vertical sides of the bottle group, thereby pre-forming the container sides.

Each bottle group delivered to station #4 is received upon a carrier plate 22 as aforesaid, which plate is one of a plurality carried by suitable endless conveyor means presently to be described in detail. This carrier plate should be somewhat narrower than the over-all transverse dimension of the base of the bottle group, and somewhat longer than the length of the group in the direction of travel through the apparatus. In a typical instance it may be a smooth strip of sheet steel about three inches wide and substantially plane on both sides. It should be thick enough to give the necessary stiffness for proper support of the bottle group, but not so thick as to prevent getting the desired degree of snugness or tightness of fit of the container about the group in the finished package. In a typical instance, a thickness of about one-eighth inch is found satisfactory, where bottles are being packaged.

The end portions of the carton blank are folded inwardly and upwardly against carrier plate 22 into overlapping relation, to form the bottom of the container; which operation is performed at station #4. The carrier plate remains in position between the bottles and the bottom of the container until the completed package arrives at the "stripping" station #5 where, in the particular form of apparatus here illustrated, it is removed automatically by means described in detail hereinafter.

It is to be further noted that, in practicing the novel method in the particular specific form herein disclosed by way of example, the employment of means such as carrier plate 22 as temporary spacing means in forming the carton blank about the bottle group into the final container is an important feature, since by using plates of a different thickness, it becomes possible to vary the closeness of fit between the article group and the carrier carton, thereby enabling this factor to be adjusted and controlled with accuracy. This is important in the case of bottled soft drinks especially, where the purchaser is required to pay a deposit on the bottles which is refunded when the empty bottles are returned. On this account, and especially since the deposit frequently does not cover the cost of the bottles, it is highly desirable, in order to encourage return of the empty bottles, that the carton carrier permit easy intentional removal of the bottles without rupturing it, so that the purchaser can replace the empty bottles therein and thus have a convenient means of getting them back to the store for his refund.

In this case a bottle is removed from the completed carton by grasping it by the neck and twisting the base out through one of the open ends of the carton, the edges of the apertures *a* in the top serving as a pivot or fulcrum for performing this operation, and the edges of the end openings being flexible enough to permit removal of the bottles in this manner without rupturing the carton. At the same time, the carrier should resist accidental dislodgment and escape of the bottles, whether they are full or empty.

Thus by increasing the thickness of plate 22, more slack is provided between the bottles and the carton after the plate is removed, while decreasing the thickness has the opposite effect. Therefore, the ease with which the bottles may be withdrawn by the consumer from the carton may be varied to suit the particular conditions or demand, assuming the tension or other force exerted on the carton blank in the folding operation to remain the same. It is of course necessary to stay within reasonable limits in this variation, as a package that is very loose will allow the bottles to fall out and be damaged during ordinary handling, while one that is very tight will make it unnecessarily difficult to remove and to replace the bottles, with probable destruction of or damage to the carrier. As previously stated herein, it has been found that a thickness of about one-eighth of an inch for a carrier plate 22 usually provides an optimum degree of tightness in the completed package under typical practical operating conditions.

Carriers 22 constitute part of endless conveyor means, the construction and arrangement of which will now be described. Each carrier 22 is attached at its forward end, as by pivot bolt 23, to a suitable support, such as casting 24, in such manner as to permit the plate to swivel or swing about such pivot in a plane substantially perpendicular thereto. The plate is also capable of slight up and down movement on the pivot bolt for a purpose to be hereinafter referred to. Casting 24 is fixedly mounted upon two rods 25 extending between opposite links of roller chains 26, the end portions of said rods 25 constituting connecting pins for these links in said chains. The chains 26 pass over idler sprockets 27 at the rear or feed-in end of the apparatus, and also over driven sprockets 28 at the forward or delivery end; other sprockets not shown being provided as may be necessary to carry the chains in the usual manner to constitute an endless conveyor. The rollers of chains 26 travel on tracks 29 carried by angles 30, as best shown in Figs. 9 and 10. The sprockets 28 are driven, in a manner hereinafter to be described more in detail, to effect intermittent movement of the endless conveyor in advancing

the completed bottle package from station #4 to station #5, and returning the carriers 22 in properly timed sequence to station #4 in order to receive succeeding bottle groups.

It will be noted that the carrier 22 extends rearwardly beyond the bottle group for some little distance, and that in the position illustrated at station #4, the pusher head (5, 5a, 5b) rests upon this extended portion at the conclusion of its forward stroke by which it delivers a bottle group upon said plate 22, the rear extension of which is slotted or notched at 22a in order not to interfere with proper movement of arm 3a. Means are provided for properly centering each plate 22 and supporting its rear extension when the plate is advanced by the endless conveyor into its station #4 position. In the present instance, such means is provided by the outwardly flared ends 31 of the arms of two three-armed spiders 32 keyed to sprocket shaft 33 of idler sprocket 27. Said members 31 are spaced 120° apart; and the spacing of the carrier plates 22 on the endless conveyor, together with the timing of the various operating parts, is such that as each carrier plate is brought up into its station #4 position, a pair of said members 31 engages the opposite lateral margins of said plate adjacent its swivelled end, thus ensuring proper centering and aligning of the carrier plate, and also serving to support its rear end when the bottle group is being delivered thereover into the position shown in the drawings at station #4.

As already indicated hereinabove, the specific aparatus here illustrated includes a glue clamp 34, the purpose of which is to cooperate with carrier plate 22 in ensuring formation and permanency of the glued joint between the overlapped ends of the carton blank. It is to be understood that while the employment of such a clamp in the arrangement, and functioning in the manner, herein disclosed is an advantageous feature of the invention in one of its desirable practical embodiments, such clamp is by no means an indispensable feature of the combination constituting the invention, broadly considered.

In the arrangement here shown, a glue clamp 34 is associated with each carrier plate 22 to constitute what is hereinafter sometimes referred to as a carrier-clamp unit. More specifically, the clamp in the form here shown is a hollow box-like structure comprising a flat upper plate 34x whose upper face presents a plane contacting surface, backed by a flanged channel member 34y secured to said upper plate in any suitable manner. That portion of clamp plate 34x which extends forward beyond the channel member bends downwardly (viewing the clamp in horizontal clamping position) at a slight angle to the main portion and terminates in a crimped or curled-over edge 34a providing a hinge sleeve or knuckle through which passes the rearmost of the horizontal rods 25 on which casting 24 is mounted, in such manner that said clamp is hinged below the carrier plate and is thus swingable only in a substantially vertical plane, substantially at right angles to the plane of the carrier plate, into and out of contact or pressure-transmitting relation to said plate. As each of the carrier-clamp units rounds sprocket 27 on its way to station #4, the glue clamp, which would normally hang vertically from member 24 at this stage, is guided over and out of contact with shaft 33 by the curved guide 35 carried on said shaft but held from rotating therewith by attachment to a cross rod (not shown) attached to the frame 1a. After being thus guided over shaft 33, the glue clamp 34 swings back downwardly into the vertical position shown in Fig. 5. In order to avoid complicating the drawings, Figs. 5 and 6, the glue clamp which actually forms part of each of the carrier-clamp units is illustrated for only one of these units.

Shaft 33 also carries a pair of outwardly coned discs 36, the function of which is to slightly pre-fold inwardly those portions of the carton blank that are to form the container bottom, so that they will be certain to pass folder levers 37, each fixedly mounted on a shaft 641 shown in Fig. 10 and presently to be described in greater detail.

Suitably supported above chute 1 at station #4 is mechanism for snugly forming the carton blank against the bottle shoulders and opposite sides of the bottle group. As here shown, such forming mechanism comprises a plurality of parallel flat forming devices 38, two in this instance, each comprising a bifurcated blade-like member in the form of a yoke or inverted U disposed transversely of the carrier-clamp conveyor. The yoke-shaped former blades 38 are secured to a cross-head 43 carried upon a horizontal transverse member 43a, which is secured at its opposite ends to upright rods 44 vertically slidable in guide sleeves 45 mounted on the apparatus frame on opposite sides of the conveyor. Such rods are reciprocated vertically, to effect properly timed operation of former blades 38, by actuating means presently to be described. In order to provide for the not infrequent slight variation in height of articles (bottles, in this instance) that are of supposedly uniform standard height, the former blades are yieldingly mounted on cross-head 43. As here shown, mounting stud 39, secured to the upper end of shank 38a of each former blade, works vertically through an opening in the cross-head and is held in place by nut 42 on its threaded upper end. A coiled compression spring 41 surrounding the stud and confined between the cross-head and thrust collar 40, yieldingly resists upward movement of the former blade relative to the cross-head. The degree of compression of spring 41 is adjustable by turning nut 42.

The lower ends of the depending vertical side-forming branches of the substantially parallel former blades 38 are held, on opposite sides of the forming unit, in rigid but adjustable spaced relation corresponding to the spacing of the mounting of the blades at their upper ends on cross-head 43. As here shown, this is effected by means of threaded bolt and nut connections indicated generally at 46. This spacing, where bottles are to be packaged, is such as to permit the yoke-shaped former blades to descend with their generally horizontal base portions passing down between the upwardly projecting necks of adjacent bottles, in the longitudinal row or rows composing the group being packaged, into position to form the upper face or top of the package. Thus, in the present instance, the two former blades 38 are so spaced apart that they are substantially in transverse registry, respectively, with the two vertical spaces between the center bottle and the two end bottles of each of the two longitudinal rows constituting the bottle group. The former blades can therefore be so

shaped on their inner or working surfaces as to effectively press the carton blank into very close and snug relationship with the bottle group as a whole, which is important in getting the proper tensioning of the carton about the group and thereby properly holding the bottles in the completed container against accidental dislodgment. The extent of this tensioning by the former blades is of course to be coordinated with the spacing effect of the carrier plate 22 which, as already stated, is removed after completion of the container.

It is desirable that the former blades 38 be of relatively thin material, as shown in Fig. 5, sheet steel about one-eighth inch thick being satisfactory in a typical instance. Not only does this ensure that the descending former blades will pass between adjacent bottle necks as described; but, where the hereinabove mentioned detachable handle is pre-assembled with the carton blank, interference of the blades with the handle is thereby also guarded against. From Fig. 14—A, where the handle slits *k* in the carton blank are shown on either side of the central pair of bottle-neck receiving apertures *a*, it will be apparent that, when the handle (Fig. 14—B) is assembled with the blank, it overlies that pair of apertures. When the carton is applied to the bottle group, the corresponding bottle necks merely elevate the handle loop vertically, in which position it still presents no obstruction to downward passage of the forming or former blades so that the former blades can still pass down on either side of it. When the package is completed, the handle can be collapsed down against the top of the carton, on either side of the central pair of bottle necks.

The vertically movable rods 44 carrying the formers 38 are actuated for proper functioning of said formers by any suitable means. In the present instance, a driving connection is provided by a sleeve 48 adjustably clamped to each of said rods 44, to which sleeve a connecting bar 49 is pivotally attached; said bar 49, in turn, is pivotally attached to crank arm 50 secured to actuating crank shaft 51. Shaft 51 is driven through intermittent and plain gears indicated generally in Fig. 5, and in greater detail in Fig. 13. Continuously running intermittent gear 52 is driven by the intermediate shaft 53 through transmission gearing comprising conventional mitre gears 54*a*, 54*b*, shaft 54*c*, and mitre gears 55*a* and 55*b*, as shown in Fig. 5. This gear train effects descending and ascending movements of the carton-former 38 in a manner and timed relation to be described later. The adjustability of the driving sleeves 48 upon the rods 44 enables adjusting the effective operating height of the former blade unit (38 etc.) above the conveyor, whereby it can operate upon groups of bottles of widely varying standard heights. Furthermore, it enables small variations to be made in the height of the former blade unit in properly coordinating the tensioning effect produced on the carton blank by the carton-forming devices at station #4, with the spacing effect of carrier plate 22, in obtaining the desired degree of tightness or snugness with which the carton hugs the bottle group in the completed package as finely delivered from the machine.

In operation, after a carrier plate 22 has come to rest at station #4 and a bottle group has been deposited thereon in proper position, the former blades 38 begin to descend, and this descent continues for a pre-determined distance dependent upon the size and shape of the bottles being packaged. They firmly press down the top portion of the carton between the bottles and around the shoulders thereof on the opposite longer sides of the group, at the same time holding the vertical sides in against the group. In addition, the side portions of the container are firmly pressed inwardly by spring-tensioned, horizontally elongated guides 47, indicated generally in Figs. 2 and 5, and in greater structural detail in Fig. 9. These guides are, in effect, continuations of pre-forming guides 21. Guides 47, however, are mounted on the apparatus frame by means of bolts 47*a*, connecting links 47*b*, stud bolts 47*c* and adjustable compression springs 47*d*, thus being adapted to yield outwardly to a limited extent, thereby providing some allowance for variation in package width and at the same time ensuring that the sides of the carton are pressed flat against the lateral faces of the article group.

Each of the folder arms 37 referred to hereinabove and illustrated in Figs. 5 and 10, carries a folder device. One of these folders, located at the left hand side of the package looking toward the delivery end of the apparatus, is indicated at 57, while the other, indicated generally at 57*a*, is located on the opposite side of the apparatus. These folders, 57 and 57*a*, function to fold in under the carrier plate 22 the end portions *d* of the carton blank whose margins are to be overlapped and secured together to form the container bottom. Since, in the present illustrative example, the margin of the right hand end of the container blank carries the glue, this margin is caused to overlie the margin of the other end when the margins are overlapped. Therefore, the actuation of the right hand folder device 57*a* is such that it lags slightly behind the left hand folder 57 in its operation, as will further appear hereinafter.

Each of the folder devices 57, 57*a*, comprises an angle 58 co-extensive longitudinally with the width of the container blank (i. e. the length of the package), which angle carries three tensioning strips or fingers 59, desirably of sheet metal or the like, attached thereto in such manner that they may yield outwardly under applied pressure. As here shown, said strips 59 are attached to each angle 58 by adjustable compression spring connections indicated at 60. The purpose of these members 59 is to make edgewise contact with the paperboard of the carton at the base of each of the cut-outs *e* on the transverse center line of each of the three pairs of bottles composing the group, when said folding devices 57, 57*a*, are moved inwardly toward each other into the position illustrated in solid line in Fig. 10. It will be seen that each of the strips 59 projects a short distance above the angle 58 into the small space between the folded-in container bottom and the bottles on each side of the carrier plate 22, at the same time engaging the edge of the carton board at the base of each of the aforesaid cut-outs and forcing the overlapped portions thereof inwardly as the folders 57, 57*a* are moved inwardly from their outermost positions indicated in dotted line; the inward edgewise pressure of the fingers 59 on the carton board being adjustable by adjustment of the tension of the compression springs forming part of the securing device 60.

The arrangement just described therefore effectively cooperates with the rest of the parts

of the carton-folding or forming mechanism located at station #4 in positively tensioning the strip-like blank firmly and compactly about the assembled bottle group and carrier plate 22. This mechanism thus affords one desirable form of means whereby to carry out an important phase of the packaging method included in the invention.

Attached to each folder lever 37 by means of a boss 37*a* is a half-round bar 61 extending the full width of the carton blank. These bars 61 serve to guide the ends of the carton blank as the articles and blank come into positions at station #4, and to maintain the pre-folded shape given by coned discs 36. These bars also act to start a smooth bending or folding-under of the carton ends in preparation for the completion of this folding section by folders 57, 57*a*.

The mechanism for actuating the folders in properly timed relation to the other parts of the apparatus includes cams 62 and 62*a* for folder 57 and folder 57*a*, respectively. Each cam is fast with a shaft 66 and is rotated thereby continuously by suitable driving mechanism to be described in greater detail hereinafter, and acts upon a cam roller 63 carried by arm 64 fixedly mounted on the same shaft 641 carrying the corresponding folder lever 37. The positions of the folders shown in full and dotted lines, respectively, correspond to the high and low points of the respective cams 62 and 62*a*. Each of the cam rollers 63, is maintained in contact with its respectively cooperating cam surface by means of a tension spring 65. The cam shafts 66 are driven from the secondary power shaft 53 by a train of spur gears 67, 68, 69, 70.

It will be noted that, although the outlines of the two cams are alike, the angular setting of cam 62 on its shaft is slightly in advance of the setting of cam 62*a* on its shaft. This is in order to cause folder 57 to begin its folding action somewhat ahead of folder 57*a*, thereby causing the glued margin of the end of the carton blank folded in by the latter to over-lie the other end margin of the carton blank in the overlapped joint.

Folders 57, 57*a*, remain in the position shown in full lines in Fig. 10 until the glue clamp 34 has been elevated or swung upward about its hinge to press against the overlapped joint so as to hold the same firmly against cooperating carrier plate 22 of this clamp-carrier unit until the glue or adhesive has set sufficiently. Fig. 10 shows the glue clamp in such elevated position. Just prior to being so elevated, the glue clamp hangs down substantially vertically as shown at the left in Fig. 5. In this position, said glue clamp is in contact with rollers 71 carried by pressure lever 72 pivoted on the apparatus frame at 73 at a point slightly beyond the position occupied by the bottle group at station #4. Said rollers actually contact the lower face of the channel member 34*y* which backs the working face of the glue clamp 34. For actuating the pressure arm 72 to swing the glue clamp 34, which should be somewhat narrower than carrier 22, up between the folders 57, 57*a*, and into contact with the glued overlapped joint, suitably timed actuating mechanism is provided. This may be of various forms, but as here shown it comprises shaft 74, which is driven by suitable gearing from the transmission shaft 53, and carries keyed to its forward end a constantly driven intermittent gear 75, constituting part of a gearing train shown in Fig. 12. This gearing transmits power through a further gear train 76, 77, 78, shaft 79, and mitre gears 80*a*, 80*b*, to shaft 81, thereby driving crank arm 82 fast therewith. This crank arm actuates connecting bar 83 pivoted thereto at 831 which is also pivoted at 832 to the glue clamp pressure arm or lever 72, as best shown in Fig. 5, said bar 83 thus acting to raise and lower clamp 34 as crank 82 rotates.

In operation, after the folders 57, 57*a*, have assumed the position shown in full lines in Fig. 10, the pressure lever 72 elevates the glue clamp into clamping position against the joint formed by the overlapped ends of the carton blank at the bottom of the container. The elevation of the glue clamp thus effected is such that, because of the box-like structure of the clamp, the entire assemblage comprising the bottle package and carrier-clamp unit (22, 34) is lifted slightly until the whole weight of the bottles and contents is supported by clamp 34, this being permitted by the slight vertical play given the carrier plate 22 on its securing stud 23. In this way, a weight amounting to as much as ten or twelve pounds or more in a typical instance, depending upon the size of the bottles being packaged, is placed directly on the freshly glued joint. Moreover, in order that this weight may be maintained on the joint throughout the subsequent travel of the package through the apparatus to the point of package delivery, a glue clamp track 84 is provided (Fig. 2) by which, as the endless conveyor system moves forward, the glue clamp is supported in its elevated position and continues to carry said weight. The vertical clearance between the head of the pivot pin 23 and the carrier plate 22 is, as already indicated, sufficient to allow the described raising of the entire package assembly without lifting the conveyor chains.

It will be seen that, in case it is not desired to make use of a member corresponding to glue clamp 34, the weight of the package, with carrier plate 22 in position between the container bottom and the lower ends of the bottles, can be carried directly by means corresponding to track 84 located sufficiently high to effect this, thus keeping the desired pressure on the freshly glued joint for the desired period of time, as before.

The distance from station #4 to station #5 is sufficient to allow time enough for the glue to set to such an extent that the package can be safely handled. If desired, a heating tunnel or other suitable heating means can be provided between stations #4 and #5 to expedite the setting of the adhesive.

The next operation to be performed is the separation or stripping of the unit comprising carrier plate 22 and glue clamp 34 from the completed package so that the latter may be removed from the apparatus. If desired, an operator may perform this operation manually simply by restraining the package against further advancing movement after it has remained on the conveyor long enough to permit the glue to set sufficiently. In such case, the carrier plate and glue clamp are simply pulled out of contact with the package by the advancing movement of the conveyor as the package is held stationary. The package can then be simply lifted off the conveyor by the operator and deposited wherever convenient for further handling. Or, the aforesaid stripping operation can be accomplished mechanically by mechanism arranged automatically to interpose stop means to arrest further forward movement of the package at the proper point in its progress,

leaving the package to be manually removed from the apparatus as before.

Most advantageously, however, both the stripping and removing operations may be performed mechanically and automatically, and a particularly desirable arrangement for accomplishing this is herein disclosed, located at station #5 of the apparatus illustrated more particularly in Figs. 3 and 6 of the drawings. By means of this arrangement, the completed package, together with the carrier plate 22 of the carrier-clamp unit, is swung at right angles to the conveyor in an arc of which pivot pin 23 is the center, leaving clamp 34 resting on track 84; whereupon suitable means act positively to push the completed package in the direction of its new alignment and thus "strip" it from the carrier plate which is then free to be swung back into its normal position over clamp 34 on the endless conveyor, as the latter advances. This return swinging movement of the carrier plate is effected by appropriate curved guide means 85 which is contacted by the right-hand edge of said plate as the conveyor advances.

Referring now to Figs. 3 and 6 for the details of this arrangement, 86 is a vertical bearing sleeve mounted above the endless conveyor substantially in line with the right-hand edge of glue clamp track 84, looking toward the delivery end of the apparatus. In order to avoid complicating the drawings, the means for supporting this bearing sleeve in its position above the conveyor is not shown. It may consist, for example, of any suitable type of bracket secured to the apparatus frame at either or both sides of the conveyor in such manner as not to interfere with the operation of the latter. Journaled for rotation in this bearing is shaft 87 of idler pulley 88, around which passes endless roller chain 89 driven by sprocket 90 which, in turn, is driven by vertical shaft 91 in a manner hereinafter to be explained in greater detail. Fixed to the upper end of shaft 87 is a crank arm 92 having an upstanding pin 93 engaged in a slot 94 provided in the end portion of an arm 95, which is pivotally connected to crank arm 96 fixed at the upper end of a vertical shaft 97, journalled in bearing sleeve 98. Said sleeve is supported above and centrally of the conveyor by a bracket or other suitable supporting means not shown. To the lower end of shaft 97 is fixed the angular swiveling arm 99 which is movable from its idle position at the left hand side of the conveyor, indicated in dotted lines, into the full line position shown at right angles thereto when it is actuated to swing a completed package, with the associated carrier 22, at right angles to the conveyor as hereinbefore mentioned, leaving the glue clamp 34 in position on track 84.

To provide proper support for the package while it is being swiveled by arm 99 into the position shown in Fig. 3, a plate or apron 100, which may be of polished steel, is provided at this point. In line with the swiveled carrier and package are mounted a series of live rollers 101, some of which underlie the package when it is swung into this position and are of assistance in subsequently removing or stripping it from said carrier.

Endless roller chain 89, which runs continuously, carries stripper arms 102 equally spaced apart thereon and laterally projecting therefrom, one of which arms is shown in contact with the end of a complete package after the latter has been swiveled into position at right angles to the conveyor, ready to push the package away from the conveyor and thereby, with the assistance of live rollers 101, to strip it from its associated carrier element 22 so that it can be delivered to its proper destination. Each of the stripper arms 102 is secured to and carried by the roller chain 89 through the medium of elongated pins 103 of certain rollers forming a part of the chain construction. To further hold them in proper position, each arm bears throughout its travel on the upper side of a track 104, and is extended inwardly as indicated at 102*a* to provide an extension which bears on the under face of disks 105 concentric with sprockets 88, 90, in passing around said sprockets, and on the under face of tracks 106 in traveling intermediate said sprockets.

Driving sprocket 90 is continuously driven from feed shaft 53 through mitre gears 107*a*, 107*b*, shaft 108, mitre gears 109*a*, 109*b*, and shaft 91, as best shown in Fig. 3. The speed of rotation of sprocket 90, and hence the peripheral speed of roller chain 89, are so coordinated with the number of stripping arms 102 attached to this chain that an arm comes into position behind each completed package at the proper time for stripping it off carrier plate 22. In the particular form of apparatus herein disclosed, there are two arms for this purpose, adapted and arranged to act successively.

The conveyor is at rest during the described operation of swiveling the package at right angles thereto and stripping it off the carrier. After the parts have reached the position shown in full lines in Fig. 3, continued rotation of the crank arm 92 in the direction of the arrow causes the crank arm 92 to pass dead center position (i. e. in line with centers 95*a*, 97) thus permitting spring 110 to swing arm 99 quickly back into its position at the side of the conveyor as indicated in dotted lines. This or some other form of quick-return mechanism is necessary in order that swiveling arm 99 may be swung back into its dotted line position in time to avoid the next oncoming package. When crank arm 92 is 180° from its full-line position shown in Fig. 3, pin 93 occupies the end of slot 94 opposite to that shown in full lines. Continued rotation of the crank through 90° brings the connecting rod 95 into the dotted line position shown in Fig. 3; at which point the further rotation of the crank causes swiveling movement of arm 99, with a package and its supporting carrier, to begin and continue until completed as shown in full lines and as already described. It is to be noted that the length of slot 94 is at least as great as the radius of the crank pin circle.

The completed package having been stripped off the carrier plate 22 as described, the endless conveyor resumes its movement toward the delivery end of the apparatus. By this movement the carrier plate is automatically swung back into its normal central position in the conveyor assembly wherein it rests directly upon the co-operating glue clamp 34 of the carrier-clamp unit, being guided to perform this movement by curved guide 85, as already stated.

As the successive carrier-clamp units pass around the sprockets 28 on their way back to station #4, they pass between a pair of guides 111 (Figs. 3 and 6) which serve to prevent the carrier plate 22 of each unit from swiveling laterally to an undesirable extent. It is to be noted also that the glue clamp track 84 has its terminal portion curved as indicated at 84*a* in order to assist in guiding the carrier-clamp units around the sprocket. After passing around the sprockets,

the carrier-clamp units ride downward and back to station #4 on track 112.

Conveyor driving sprockets 28 are desirably driven by mechanism particularly adapted to ensure easy starting and slow pick-up, as well as decelerated or gradual stopping. To the shaft 113, which is constantly driven by the primary power source, is keyed a driving member 114 having a crank-pin roller 115 mounted on its face. This roller is adapted to engage successively a plurality of slots 116 formed in a cooperating driven member 117. The roller and cooperating slots are so designed that the roller enters each slot 116 radially at the commencement of its advancing action, the movement being substantially of the well known Geneva type and thus well adapted to eliminate shock in picking up the load. Driven member 117 has six lock rollers 118 mounted on the land between the slots (Fig. 6). When the driving roller 115 is leaving a slot 116, a projecting partial ring 119 formed on driving disk member 114 moves in front of the roller 118 and serves to positively lock the mechanism until roller 115 has reached the proper position to enter the next succeeding slot 116. This effectively prevents movement of the parts except at the times desired.

Driven disk member 117, thus actuated intermittently by the Geneva mechanism just described, transmits movement through shaft 120 to a spur gear 121 keyed thereto (Figs. 6 and 11), which spur gear in turn engages a smaller spur gear 122 keyed to shaft 123 of the driving sprockets, thus driving sprockets 28 and conveyor chains 26.

By way of example, and for purposes of explanation, let it be assumed that, as here shown, driving disk member 114 makes twenty revolutions per minute; that driven disk member 117 has six slots 116; that gear 121 has sixty teeth; that gear 122 has fifteen teeth; and that each of sprockets 28 has thirty teeth. Therefore, since disk 114 makes one complete revolution in three seconds, and since the arc through which crank-pin roller 115 travels between its points of entry into and exit from each slot 116 is 120°, it follows that said roller drives member 117 for one second, turning it through 60°, and then allows it to rest for two seconds. Each 60° turning movement of disk member 117 causes an equal angular turning movement of 60-tooth gear 121 equivalent to ten teeth thereon, thereby causing 15-tooth gear 122, sprocket shaft 123 and sprockets 28 to turn through 240° during each such one-second driving period. Thus the conveyor mechanism, including chains 26, travels during each such one-second period, a distance corresponding to twenty teeth of said sprockets.

Transmission shaft 53 is driven from the power shaft 113 through conventional mitre gears 113a, 113b.

The operation of the apparatus as a whole is sufficiently obvious from the foregoing description. It will be recapitulated and further explained, however, in connection with the timing diagram provided in Fig. 14 which graphically sets forth the timing and inter-relationship of the operations of all the essential parts hereinabove described. For the sake of a specific example, but without intending in any way to limit the invention to such details, certain assumptions have been made, as above set forth and as will further appear hereinafter, respecting the detailed design of this typical apparatus and its time cycle, as a basis for said timing diagram.

Thus for the purposes of this explanation, it is assumed that the rate of driving is such, and the apparatus parts are so timed in respect to their respective operations, that a period of three seconds elapses between the commencement of each forward or advancing movement of a given bottle group and the commencement of the next succeeding forward movement thereof. It is further assumed that each advancing movement consumes one second, and that the group remains at rest for two seconds after each advancing movement. The specific dimensioning and designing of various operating parts as indicated by legends on the drawings and at various points in the foregoing description, are also assumed, merely by way of illustrative example, as a part of the basis for the timing diagram aforesaid and the explanation given in connection therewith.

Starting now at the feed-in end of the apparatus, and with the intermittently moving parts at rest, and with the pusher bar 7 in its rearmost position shown in dotted lines at the right in Fig. 4, the pusher bar has at this instant just completed its rearward stroke and is about to reverse its movement and advance toward the left on its forward stroke. Let this point be represented by A on the timing diagram. During the period between A and B, the pusher bar advances toward the left causing pusher arm 3 to ride up over the inclined faces of the pivoted guides 12 to bring the pusher arm head into contact with the bottle group shown at station #1, the star wheels being at rest during this period. The time interval A—B is 0.3 second.

At point B of the timing diagram, the first pusher arm head has just begun to advance the bottle group shown at station #1 toward station #2; while star wheels 2 begin to revolve but do not immediately act to advance another group of bottles to take the place of those being pushed from station #1. The star wheels continue to rotate for a total time of 1.2 seconds to point G on the timing diagram, during which time they make one complete rotation and advance a new group of six bottles into the position shown at station #1. During this same time, B—G, the pusher bar continues its forward movement, pushing the bottle group ahead of it to station #2, its total period of forward movement being, of course, A—G, or 1.5 seconds.

During the time interval G—A, which is also 1.5 seconds, the pusher bar returns to its rearmost position and the star wheels are at rest.

The bottle group pushed to station #2 as just stated is advanced to station #3 by the second pusher arm 3, its complete period or cycle of advance to and rest at station #3 being also 3 seconds. In the same way the bottle group is advanced to station #4 by pusher arm 3a where it is placed on one of the series of carrier plates 22 and the final folding operation is performed on the carton blank to complete the container. At the point G on the timing diagram, the bottle group that has been delivered to station #4 with a carton blank partially applied thereto, is at rest on said carrier plate 22. At this point, the former device 33 begins moving downward to perform its function, this downward movement continuing to point M, the period G—M being 0.75 second. It dwells for the period M—Q, or 0.5 second; and then, during the succeeding period Q—D, or 0.75 second, it returns to its uppermost position, where it dwells for the period D—G, or

1.0 second, thus completing its cycle of operations.

Meanwhile, the left-hand folder **57** begins to operate at point H, followed by right-hand folder **57***a* at point I, representing a lag of 0.1 second. The inward folding movement of folder **57** continues to point N, or for a period of 0.75 second; the corresponding movement of the right-hand folder **57***a* terminating at O and also representing a total operating time of 0.75 second. After these respective movements of the folders have been completed, both folders dwell until the point Q, which represents a dwell of 0.4 second for the left-hand folder and 0.3 second for the right-hand folder. Both folders then start their return or outward movement at Q which terminates at D, representing 0.75 second for the simultaneous return movement of both folders. The left-hand folder then rests or dwells from D to H, representing 1.1 seconds, while the right-hand folder dwells from D to I, or 1.2 seconds.

During the time that the folders are operating, glue clamp arm **72** elevates glue clamp **34** into its clamping position immediately underneath carrier plate **22** and against the overlapped ends of the carbon blank, so that said clamp **34** then supports the weight of the packaged bottle group. This movement is represented on the timing diagram at J—P, a period of 0.7 second. From P to F, a period of 1.4 seconds, arm **72** remains in its elevated position; and during the latter part of this period the carrier-clamp unit **22**, **34**, together with the packaged bottle group carried thereby, is moved from its position on arm **72** and advanced toward station #5 as will presently appear. Said arm **72** then returns to its low position, the time required for this return movement being F—H, or 0.7 second. The said arm **72** then rests in its low position for a period of 0.2 second represented at H—J, after which its cycle of operation is repeated.

While actuating arm **72** is in its elevated or up position, the carrier-clamp unit **22**, **34**, with its associated package, is advanced toward station #5. On the timing diagram, the movement is indicated as direct from station #4 to station #5, with no intervening time interval. But, in order to allow ample time for the adhesive to set, there may intervene, of course, as many 3-second cycle periods as may be desirable for this purpose. However, the final movement to station #5 beginning at D and ending at G, is a period of 1.0 second. The assemblage then rests from G to H, or 0.1 second. Beginning at H, the package and carrier **22** are swiveled off of clamp **34** at right angles to tracks **29**, this movement requiring 0.5 second, as represented at H—K on the diagram. After a very short lapse of time, K—L, or 0.04 second, one of two stripping arms **102** contacts the package and strips it from the carrier **22**, this action requiring 1.26 seconds, represented at L—C on the diagram. The carrier **22** then rests from C to D, a period of 0.1 second, whereupon the conveyor then resumes its forward movement, carrier **22** being thereby automatically swung back into normal position in alignment with its cooperating clamp **34**. The carrier-clamp unit then idles on its way back to station #4, through as many 3-second cycles as may be required in the practical design of the apparatus, finally arriving at station #4 once more, and again going through the cycle of operations already described, beginning at G in the timing diagram (Fig. 14).

By modifying certain parts of the apparatus described hereinabove, it is quite feasible to employ it also for packaging flat-top cans of all types common to the various canning industries such as those for milk, beer, fruit, vegetables, meat, lubricating oil and the like. The carton employed may be generally similar to the one previously described in connection with packaging bottles. Fig. 25 shows such a carton blank as adapted for cans. In this instance, a handle *h'* is shown pre-assembled with the blank, although the handle may, of course, be attached after the package has been completed. It will be noted that there are apertures *e'* along the upper as well as the lower edges of the completed package. It does not, of course, have apertures in the top similar to *a* in the bottle type for the vertical projection of the bottle necks. The neck-receiving apertures *a* in the bottle type have the additional function of helping to align the blank itself with the bottle group, and hence it is a simple matter to place these blanks over the bottle groups by hand and have proper alignment automatically. In the case of packaging the flat-top cans, however, no such automatic alignment is inherent and for this reason a modification in the apparatus to attain alignment between the blanks and the can groups is necessary. One form of such modified apparatus is shown in Figs. 15 to 23, wherein certain parts substantially unchanged from the apparatus illustrated in Figs. 1–13 are designated by the same reference numerals as before.

Referring more particularly to Figs. 15 and 17, cans coming from the canning line are arranged into a double file by an automatic switch, not shown. They are pushed along the sheet metal chute **1** by the power conveyor feeding them until they come to a pair of star wheels **2**, similar to those previously described, and similarly actuated and timed; these star wheels functioning, as before, to select and space the cans into packaging groups, each group consisting of six cans in this instance also.

Means are provided for feeding a carton blank into proper alignment and registry with each can group. To this end, in the specific apparatus shown, a continuous standard roller chain **200**, carried by tracks **201**, idler sprockets **203** and drive sprockets **204** is positioned above the double row of cans and slightly to each side of chute **1**. Other idler sprockets, not shown, are of course provided for carrying said roller chains beyond the right-hand edge of the drawings. The roller chains and their supporting tracks are carried by angle supports **202** extending from a point adjacent idler sprockets **203** back along and above the cans on chute **1**. These supports **202** are fastened to the apparatus frame which has been omitted from the drawings for the sake of clarity. Incorporated in roller chains **200** are a number of attachment links **205**, each having a flat plate **205***a* and a pin **206** upstanding therefrom. The height of roller chain tracks **201** and their supports **202** above chute **1** is such that the flat plates **205***a* are slightly above the tops of the cans. Pins **206** and their associated attachment links are mounted on the roller chains in such manner as to provide groups or sets of four pins each, each group being arranged to marginally engage a carton blank *c'* and eventually to position it properly with respect to a can group, as best shown in Fig. 15. The two pins of each set on the same chain are spaced apart slightly more than is necessary to receive one of

the carton blanks between them; but between each set of four pins there is insufficient room for two blanks, thus preventing misplacing of the blanks on the feeding conveyor. In the particular form of apparatus disclosed in the drawings, the carton blanks are placed by hand into each space provided by one of the aforesaid groups of four pins, and are carried forward by the rear pins of each group as the roller chains 200 advance, the front pins serving merely to prevent the blank from being too far forward. By making the roller chains 200 of sufficient length and providing the necessary number of attachment links and pins, any convenient number of blanks may be placed on the conveyor at one time although as here shown, there is provision for only two. Angles 207 (Fig. 19), supported from the frame, are provided for carrying the ends of the carton blanks and also serve as end guides for properly aligning the blanks laterally. To further ensure proper aligning of the blanks, roller chains 200, and therefore pins 206, are so positioned laterally of chute 1 that the rear pins engage the edges of the carton blanks, in this instance at the center of the inwardly curved portions *g* with which the particular form of carton here shown is provided; these curved portions being the vertical edges of the carton in the completed package.

The operation of roller chain 200, and therefore the advancement of the carton blanks, is coordinated with the action of star wheels 2, by means to be described hereinafter. This is effected in such manner that each time six cans are selected by the star wheels and advanced into position at station #1, a carton blank is simultaneously moved forward into predetermined position or alignment with respect to the can group. For a purpose to be referred to later, the pins on roller chains 200 actually push the carton a small distance, say about one-half to one inch, farther forward than the rear edge of the rear cans is placed by the star wheels 2. The chains then turn downward and have no more contact with the carton blank. The coordination between the star wheels and advancing carton blanks as mentioned above is accomplished by mounting drive sprockets 204 on shaft 16, as shown in Fig. 20, thereby linking the action of the roller chain 200 with the rotation of star wheels 2, since the latter are also driven from this shaft.

The advancement of the can groups from station to station by means of pusher arms 3, 3*a*, and pusher bar 7 is similar to that of the bottle groups in the operation of the apparatus of Figs. 1 to 13 already described hereinabove, and therefore such description need not be repeated here.

Located above the cans and extending from station #1 to station #4 is a pair of continuous standard roller chains 208 carrying cooperating pairs of horizontally disposed locator bar or clamp devices indicated generally at 215, 216, and comprising brackets or hangers 215*x*, and 216*x*, by which they are secured to said chains. Each pair of locator bar devices 215, 216, is adapted and arranged, when on the lower run of said chains, to engage the front and rear faces, respectively, of a can group and hold said group in proper preliminary alignment with the carton blank during the succeeding movement of the group from station to station. Chains 208 are not power driven, but are driven, as will presently appear, by the forward movements of those can groups which, at any given time, are each clamped between a pair of cooperating bars 215, 216. Said chains run over idler sprockets 213 and on supporting tracks indicated generally at 209, located intermediate said sprockets as shown in Fig. 17. These tracks consist of upper tracks 209*a* supported by an angle 212 suitably suspended from the apparatus frame; and lower tracks 209*b* supported from angles 210 which are attached to the apparatus frame by adjustably spring-pressed means comprising stud bolts 211, hangers 211*a* and compression springs 211*b* intermediate the angles and hangers. Springs 211*b* serve to press angles 210 into close contact with the tops of can groups as they progress toward station #4, as will be described in greater detail hereinafter. The overhead pressing means thus provided extends, as shown, from a point adjacent station #1 through station #4.

The cooperating forward and rear locator bars or clamps 215, 216, of each pair are supported between the roller chains 208 on elongated pins 214 extending transversely of the conveyor between corresponding links of the two chains. The forward clamp 215 of the proper pair is engaged by the upper portion of the forward vertical face of a can group as the group is advanced to station #1 by the star wheel feeding mechanism. Therefore, as the can group progresses from station #1 toward the next station, the pressure of its forward face against clamp 215 is effective to move the lower run of roller chains 208 in the same direction, thus eventually bringing rear clamp 216 down around idler sprockets 213 and into contact with the upper rims of the cans at the rear face of the group. It will be noted, however, that rear clamp 216 does not completely round idler sprockets 213, just above the rear of station #1, until after the cans at station #1 have begun to move toward station #2 under the advancing action of pusher bar 3. This is to enable the carton blank to be advanced into position at station #1 without any interference from clamp 216. This object is also furthered by the aforesaid preliminary positioning or aligning of the carton blank about one-half to one inch ahead of its final positioning with respect to the can group. In this connection it is also to be noted that brackets 215*x* are curved, as shown, to provide clearance for the forward edges of the carton blanks which, as previously stated, have been preliminarily positioned slightly forward of proper final alignment.

Since cans of supposedly the same standard capacity and shape often actually vary slightly in diameter, provision is desirably made to allow for this in the construction of one or the other of each pair of the locator bars or clamps 215, 216. In the present example, such allowance is provided for in the construction of the rear clamp 216. As here shown, each clamp 216 is composed of two flat plates 216*a*, the forward of these two plates being held away from the rear one by spring means 216*b* (Fig. 21). Pins 216*c*, suitably attached to the forward plate, slide in holes provided in the rear plate so that a variation in the length of the article group may be accommodated, this arrangement also ensuring a firm grip by the cooperating clamps on the can group.

When the carton blank feed chain 200 is placing a blank over the top of a can group at station #1, the smooth under sides of angles 210 act as guide surfaces for pressing the carton blank into close contact with the can tops. The entering ends of these angles are curved up-

wardly as at 210a to facilitate this operation. As the can group progresses from station #1 to station #4, there is sufficient friction between the under surfaces of angles or pressure shoes 210 and the preliminarily positioned carton blank to retard the forward movement of the blank somewhat relatively to that of the can group, thus shifting the blank rearwardly into its final alignment or registry with the can group, with the rear edge of the blank engaged by clamp 216. As previously stated, the angles or shoes 210 are so mounted on hangers 211a that the pressure they exert on the can group with the carton blank positioned thereon is adjustable.

As stated hereinabove, rear clamp 216 does not completely round idler sprockets 213 at the rear of station #1 until after the pusher bar 3 starts to advance the article group. To assist in accomplishing this, the setting of the center line of idler sprockets 213 at the rear of station #1, is such that, when the can group is at rest at station #1 as shown in Fig. 17, the rear vertical face of the can group is slightly to the rear of said center line. This location of the sprocket center line places clamp arm 216 so that it does not begin its horizontal forward travel until the article group has moved forward about an inch or so, in the particular apparatus disclosed. By this means, and also because of the before-mentioned preliminary positioning of the carton blank slightly ahead of its final registry or alignment over the article group, ample room is ensured for an incoming carton blank.

Since movement of roller chain 208 occurs only when an article group is being advanced from station to station, and since movement of carton blank feed chains 200 occurs only with rotation of star wheels 2 which, in turn, occurs only while pusher bar 7 is returning to its extreme right-hand position shown in dotted lines in Fig. 17, it is obvious that clamps 215 and 216 will be stationary in the position shown in said Fig. 17, with rear clamp 216 elevated and out of the way as a can group and the carton blank therefor are advanced into position at station #1, as illustrated.

As each article group with a carton blank placed thereon moves from station #1 to station #2, glue or other adhesive is applied to one end of the blank in the same manner as previously described in connection with the machine of Figs. 1–13.

As each article group advances from station #2 to station #3, the sides of the carton blank are partially folded down along the sides of the group by guides 21; and this folding down is completed as the group advances thence to station #4. At station #4 the further folding operations necessary to complete the carton are accomplished in the same manner and by the same general type of means described in connection with the machine for packaging of bottles (Figs. 1–13). However, former blades 217 are required to act only on the sides of the carton, and hence are shaped differently from blades 38 of Fig. 5, and they are also separately mounted on crosshead 219 instead of being integral as shown in Fig. 9. Separate mounting of these blades 217 is necessary since angles 210 would interfere with the integral construction type. As shown in Fig. 22, the former blades may desirably be so dimensioned and mounted that the distance between their working or inner edges is somewhat less than the over-all width of the can group, so that the blades press or draw the carton inwardly to a slight extent into the recesses between adjacent cans, at the vertical faces of the can group. As the apertures provided in the carton blank permit lateral projection therethrough of the can rims or edges, this constricting action of the former blades contributes to attainment of an especially close fit or conforming of the blank about the can group.

The mechanism for holding the ends of the carton blank inwardly into overlapping relation beneath carrier plate 22 is also substantially the same as in the bottle-packaging machine. However, half-round bars 221, as shown in Fig. 23, are used in place of the strips or fingers 59 of Fig. 5. These bars 221, of which there are two on each folder, are so positioned that they contact the lower portion of the sides and the lower longitudinal edges of the package, between the center and end transverse rows of cans, thus pushing the overlapped ends of the carton blank together and fitting the carton snugly around the group of cans. Subsequent operations of glue clamp 34 to press the overlapped carton blank ends together until the adhesive has set are substantially identical with those described in connection with packaging bottles.

Since there is no reason for returning cans to the dealer after their contents have been consumed, and hence no need to use the carton as a return carrier for empty cans, it is not important to avoid tearing the carton when removing cans from the package. Therefore, in practice, the strip-like carton blank may be, and usually is, folded about the can group tightly to lock the cans within the finished carton so positively that the carton must be cut or torn open in order to remove them.

The center-line of the forward sprockets 213 for chains 208 of the overhead clamp-carrier or conveyor mechanism is so located, adjacent the rear of station #4, that as the advancing end of a group of cans reaches station #4, clamp 215 rounds said sprockets; and, by the time that can group has come to rest at station #4, the clamps 215 and 216 occupy the positions shown in Fig. 18.

The succeeding mechanism, and the operation thereof, for transferring the packages from station #4 to station #5, and then automatically swiveling and stripping them from the carrier plates 22 are substantially the same as already described for packaging bottles, and therefore need not be again described.

The correlation of action for most of the parts of the above apparatus has already been discussed fully in connection with the timing diagram of Fig. 14. There are, however, several additional parts in the machine adapted for packaging a plurality of flat-top cans, and for this reason a separate timing diagram is given in Fig. 24. The radial lines on this latter diagram, representing the various positions of parts of the apparatus during a complete cycle of operation, have been lettered to correspond to the diagram of Fig. 14 for convenience in referring to identical parts in the two forms of apparatus disclosed. It must also be kept in mind that the same assumptions, as for instance, driving speed, number of teeth in sprockets, etc., that were made above for the sake of a specific example, are again made here, but that it is not intended to limit the invention to such details. It is to be noted that in Fig. 24 here is shown no "position B" as in Fig. 14. This is because of the difference in timing relation of the star wheels to the other

parts, characterizing the form of apparatus shown in Figs. 15 to 23.

Referring to Fig. 24, and starting as before at the feed-in end of the apparatus with the pusher bar 7 in its rearmost position shown in dotted lines at the right in Fig. 17, it is about to begin its movement toward the left in the drawing. Let this point again be A on the diagram. During the period A—G the pusher bar advances to the left, causing pusher arm 3 to ride up over the inclined faces of pivoted guides 12 to bring the pusher arm head into contact with the can group shown at station #1, and then to advance said group. During this entire period A—G, or 1.5 seconds in this particular instance, the star wheels are stationary. At point G on the diagram the group of cans has been advanced to station #2.

During the time interval G—A, also 1.5 seconds, the pusher returns to its rearmost position again. The star wheels continue at rest during the interval G—J while the pusher bar returns; but from J to A, a period of 1.2 seconds, they make one complete revolution thereby advancing six more cans into position at station #1.

Because the carton blank feed chain 200 is driven from the same shaft as the star wheels, its periods of operation and rest coincide with those of the star wheels. In other words, during the interval A—J, or 1.8 seconds, the conveyor is at rest, while during the period J—A it advances to bring a carton blank into position over the group of cans simultaneously being advanced to station #1.

The successive steps of advancing the unit of cans and carton blank from station #2 through station #5, and the various folding, conveying, swiveling and stripping operations involved are substantially the same as those described in connection with the diagram of Fig. 14 and, being adequately shown on the timing diagram, therefore need not be discussed again.

Irrespective of the specific character of the columnar articles to the packaging of which the novel method of the invention is applied, whether they be bottles, cap-sealed cans or flat-top cans, it should be noted that the provision of a plurality of transverse rows or series of apertures in the carton blank adjacent the bending lines, in the general manner illustrated in Figs. 14—A and 25, has a further very important function and effect, besides that of more or less positively locking the articles within the open-ended tubular container so that accidental egress of the articles through the open container ends is resisted. In addition, such aperturing renders the relatively stiff blank comparatively flexible at those localities where it is to be bent around the angular edges, corners, rims or shoulders of the columnar articles for the purpose of causing the strip-like or band-like blank to conform closely to the body contour of the article group in folding the blank circumferentially about the top, bottom and two longer vertical sides thereof, and uniting the overlapping end margins of said blank. While already flexible in a broad sense, paperboard, boxboard, kraft or other suitable material of sufficient strength to be practical in a consumer-unit carrier of the type herein disclosed, is normally so stiff as to present substantial difficulty in attempting to fit it snugly about an article group. Kraft stock typically suitable for present purposes has a gauge or thickness on the order of 0.020 to 0.040 inch, for example.

Thus providing for localized flexibility of the blank by suitable aperturing, which may be further enhanced by scoring the bend lines *f*, *f'*, adjacent the apertures, contributes importantly to the practicality of the novel method for achieving the objective sought. In practice, the combined maximum widths of the cut-outs forming apertures *e* in each of the two transverse series or rows thereof provided in the bottle blank illustrated in Fig. 14—A, may desirably amount to a substantial proportion of the width of the blank, typically as much as one-half or more; and similarly for the two transverse rows of neck apertures *a*, the minimum width of the latter being determined in any case by the size of the bottle necks to be accommodated. Furthermore, the apertures *a* and *e*, in each pair of rows lying on either side of the mid-portion of the blank, are tapered toward each other. This enhances the desired localized flexibility and hence additionally facilitates snugly banding the strip-blank about the bottle group. So also, the four transverse series of edge- or rim-engaging apertures *e'* in the can blank, Fig. 25, may be similar in shape and proportioning to apertures *e* in the bottle blank, and those in each pair of series on either side of the middle of the blank may be tapered toward each other. Apertures *e'* are shown extending across the bend lines *f*, *f'*, and this has practical advantages in contributing to the desired local flexibility. The apertures provided in the bottle blank, Fig. 14—A, may also be thus located relative to their respectively adjacent bend lines, although here shown tangent thereto at their broader bases.

What is claimed is:

1. In apparatus for packaging substantially rigid columnar articles having at least one flat end, such as bottles or cans, a flat plate-like member adapted and arranged to engage one flat-end face only of a generally rectangular group of such articles, in combination with means adapted and arranged, when said plate-like member so engages such an article group, to fold the end portions of a carton-forming strip, applied directly to the other faces of such group in circumferential series with said flat-end face thereof, into overlapping relation against the outer surface of said plate-like member and to secure the overlapped strip end margins together to form an open-ended tubular container, said plate-like member being separable from said article group and its associated container by relative longitudinal or endwise movement.

2. In apparatus for packaging substantially rigid columnar articles having at least one flat end, such as bottles or cans, carton-forming mechanism including means for securing together the ends of a carton strip, in combination with a plurality of flat plate-like article-supporting members adapted and arranged, when horizontally disposed, to cooperate with such end-securing means, means for presenting said plate-like members successively in such cooperating relation therewith, means for delivering successive selected groups of such articles in generally rectangular arrangement to said plate-like members so that the articles stand upright thereon in flat-end engagement therewith, means for actuating said carton-forming mechanism to cause an applied carton strip to snugly contact directly the top and two opposed upright faces of the article group thus carried by each plate-like member and to fold the end portions of the strip into overlapping relation against the under side of said plate-like member and secure the

end margins together; said plate-like member being separable, by relative longitudinal or endwise movement, from the resultant tubular container and its associated article group.

3. In apparatus for packaging consumer-unit pluralities of substantially rigid articles, such as bottles or cans, or uniform columnar shape and size, the combination, with means for supplying such articles in upright position in groups of generally rectangular form each comprising the required number, of operatively adjacent endless conveyor means arranged for horizontal travel, to which article groups are successively delivered in upright position by such supply means, and means for actuating said conveyor means; actuating means therefor and means for delivering successive article groups thereto, said conveyor means including relatively thin flat plate-like supporting members respectively adapted to receive and carry, in upright position thereon, the successively delivered article groups, means adjacent the path of travel of said groups for substantially conforming the intermediate portion of a carton blank strip into contact with the upper and two opposite upright lateral faces of each article group, and means operable while said group rests on its supporting member to fold inwardly and secure together in overlapping relation against the under surface of said supporting member the end margins of said strip, whereby to complete an open-ended tubular carrier confining said article group; and means operable at a later point in the travel of said conveyor means to effect removal of said plate-like supporting member from between the article group and associated carrier by a relative endwise movement.

4. In a machine for enveloping a plurality of substantially rigid columnar articles, such as bottles or cans, with a carton blank adapted to form an open-ended tubular container, the combination which comprises means for positioning such plurality of articles in generally rectangular arrangement, substantially flat plate-like means for temporarily supporting the positioned articles upright thereon while leaving them exposed laterally, means for folding such a carton blank laterally around and in direct contact with said plurality of articles and such plate-like supporting means to provide an open-ended tubular container, and means for removing such temporary supporting means endwise of said completed tubular container from between the completed container and said articles.

5. In apparatus for packaging articles of substantially uniform size and shape in groups or pluralities the combination which comprises relatively thin flat carrier means adapted and arranged to receive and support a group of such articles upright without laterally confining the same, means for placing such an article group on said carrier means, means for laterally forming about said group and supporting means thus associated a strip-like carton blank having an intermediate portion superimposed directly upon said group, means for uniting the end margins of said blank underneath said carrier means to complete an open-ended tubular container, such uniting means also serving to tension said carton strip about the article group and thereby cause the articles to be forced snugly against each other within said container, and means for effecting relative endwise or longitudinal movement of the assembled article group and container with respect to said carrier means whereby to remove the latter from between said group and said container.

6. In apparatus for enveloping a plurality of bottles with a carton blank to form a tubular container having apertures through which the bottle necks project and having open opposite ends through which the bottles may be withdrawn, carton-forming mechanism including means for securing together the ends of a carton strip, in combination with an endless conveyor provided with a series of relatively thin temporary bottle-supporting plates and arranged to travel in a path operatively adjacent said carton-forming mechanism, with said plates substantially horizontal and successively in cooperating relation with said carton-forming mechanism, means for delivering to each plate at an earlier point in such path of travel a group of bottles to stand upright thereon, means for actuating said conveyor, means for actuating said carton-forming mechanism to fold an applied carton blank about said group and the temporary supporting plate on which it stands and to secure the carton blank ends together thereunder, when the assemblage has moved into the aforesaid cooperating relation with said mechanism, and means for removing said temporary supporting plate from an open end of the tubular carton after it is completed.

7. In a machine for folding a substantially rectangular carton blank around a consumer-unit plurality of articles to form a tubular carton having open opposite ends, the combination of an endless conveyor having a substantially horizontal run, and a series of relatively thin flat plates mounted at spaced intervals along said endless conveyor, each of said plates being adapted and arranged to receive a consumer-unit plurality of said articles directly upon it and to support said article plurality while a carton blank is folded around consecutive lateral faces of said article plurality and said plate to form a completed carton, each of said plates being narrower than the over-all transverse width of the base of said plurality and being also adapted and arranged to be withdrawn from an open end of the carton after it has been completed.

8. In an article packaging apparatus, a carrier-clamp unit comprising a plate-like article carrier, whose article-carrying side is substantially uniplanar, a carton-joint clamping member, supporting means on which both are mounted, said clamping member being hinged to said supporting means for swinging movement into and out of clamping relation with the opposite side of said article carrier.

9. In an article packaging apparatus, a carrier-clamp unit comprising a plate-like article carrier, a carton-joint clamping member, and supporting means on which both are mounted, said clamping member being hinged to said supporting means for swinging movement into and out of clamping relation with said article carrier, and said article carrier being pivoted on said supporting means for swinging movement substantially at right angles to that of said clamping member.

10. In article packaging apparatus, the combination, with a plurality of carrier-clamp units of the character defined by claim 8, of endless conveyor means having a substantially horizontal carrying run and means securing said units thereto, conveyor-actuating means, means for swinging each said clamping member into clamping

relation with its cooperating article carrier, and means for thereafter maintaining said clamping relation as the conveyor is actuated.

11. In article packaging apparatus, the combination, with a plurality of carrier-clamp units of the character defined by claim 9, of endless conveyor means and means securing said units thereto, conveyor-actuating means, means for swinging each said clamping member into clomping relation with its cooperating article carrier, and means for thereafter maintaining said clamping relation as the conveyor is actuated, together with means adjacent said conveyor means at a later point in the travel thereof, adapted and arranged to swing said article carrier, with an article group thereon, laterally about its pivoting point and off of said clamping member, means for removing the article group from said article carrier while so positioned, and means operative to swing said article carrier back into its former position relative to said clamping member.

12. In a machine for packaging a small plurality of substantially rigid columnar articles flat at one end, of substantially uniform size and shape and compactly arranged in a generally rectangular group, a relatively thin flat plate of somewhat less width than the over-all width of such article group at its base, and means for maintaining said plate substantially horizontal to receive and support thereon such an article group in loose or unwrapped condition and in flat-end contact with said plate, in combination with mechanism for folding a carrier blank strip circumferentially around the assemblage of such article group with said plate in direct contact with the top and two opposed upright faces of said group, such folding mechanism including finger means adapted and arranged to engage portions of the carrier blank strip adjacent the lower edges of the article group and force the opposite end margins of said strip inwardly along the under face of said plate into overlapping relation, whereby to snugly conform the carrier blank strip about the assemblage, means for securing together the thus overlapped carrier strip ends to complete an open-ended carrier, and means for effecting endwise removal of said plate from between the carrier and said article group.

13. The invention defined in claim 12, wherein said finger means are arranged to engage the edges of apertures provided in said carrier blank strip whereby the more effectively to tension said strip circumferentially about said assemblage.

14. The invention defined in claim 12, wherein said finger means are arranged to engage the edges of apertures provided in said carrier blank strip whereby the more effectively to tension said strip circumferentially about said assemblage, said apertures being so located as to lockingly engage the base rims of said articles when the carrier is completed.

15. Apparatus for packaging relatively small pluralities of substantially rigid columnar articles of practically uniform size and shape, such as bottles, cans or the like, in open-ended tubular cartons, the combination, with means for selecting groups of such articles, each group consisting of the desired number of said articles standing erect on their bases and in close, generally rectangular arrangement, of means for forming into a tubular enclosing carton a carton blank strip superimposed upon each said group, and means for advancing such article groups successively into operative relation with such forming means; said forming means including a plurality of flat plate members mounted in spaced relation along a suitably actuated endless conveyor and maintained substantially horizontal in the upper run of said conveyor, each such plate member being adapted and arranged, upon entering such upper run, to receive one of said article groups from such advancing means and to support the same erect, vertically reciprocable means mounted above the path of travel of said flat plates operable by a downward movement to conform an intermediate portion of such superimposed carton blank strip closely about the top and two opposed lateral faces of the article group carried by each said plate member, further means for folding the end portions of said strip inwardly under said plate member into overlapping relation, and means cooperating with said plate member to secure together the overlapped strip ends and complete the open-ended tubular carton; means adapted and arranged to effect removal, by relative endwise movement, of said plate member from between the carton bottom and said article group through an open end of said carton; together with driving means adapted and arranged to actuate the aforesaid means in properly timed relation to accomplish their several functions.

16. Apparatus as defined in claim 15, adapted particularly for packaging bottles or bottle-shaped cans with the neck portions thereof projecting through apertures in the top of the carton, wherein said vertically reciprocable means is shaped to permit it to descend between such neck portions and to press the apertured carton blank downwardly against the shoulder portions of the articles.

17. In the art of packaging articles of substantially uniform size and shape, the method which comprises folding a strip-like carton blank laterally about a group of such articles aligned in at least one longitudinal row, overlapping the end margins of said blank, and uniting said end margins while holding the blank so snugly conformed to the article group that the completed open-ended tubular container hugs the article group closely enough to resist accidental egress of articles through the open container ends.

18. In the art of packaging articles of substantially uniform size and columnar shape and having angular edge portions or rims, the method which comprises folding laterally about a group of such articles, aligned in at least one longitudinal row, a stirp-like carton provided intermediate its ends with transversely aligned apertures adapted and arranged for engagement by said angular edge portions or rims, overlapping the end margins of said blank, and uniting said end margins to complete an open-ended container, while holding the blank so snugly conformed to the article group that said apertures have sufficient locking engagement with said angular edge portions or rims to resist accidental egress of articles through the open container ends.

19. In the art of packaging articles of substantially uniform size and shape, the method which comprises positioning a group of such articles, aligned in at least one longitudinal row, with a lateral face of said group engaging a relatively thin plate-like member having substantial rigidity, folding laterally about said group and associated plate-like member a strip like carton blank, in such manner that the end margins of the blank

are overlapped against said plate-like member, uniting the overlapped end margins to complete an open-ended tubular container, and thereafter separating said plate-like member from the assemblage by a relative endwise or longitudinal movement.

20. In the art of packaging articles of substantially uniform size and shape, the method which comprises positioning a group of such articles, aligned in at least one longitudinal row, with a lateral face of said group engaging a relatively thin plate-like member, folding laterally about said group and associated plate-like member a strip-like carton blank, in such manner as to conform said blank snugly to the assemblage and to overlap the end margins of the blank against said plate-like member, uniting the overlapped end margins with the aid of an adhesive, while pressing said over-lapped margins against said plate-like member, to complete an open-ended tubular container, and thereafter separating said plate-like member from the assemblage by a relative endwise or longitudinal movement.

21. In the art of packaging articles of substantially uniform size and shape, the method which comprises positioning a group of such articles, aligned in at least one longitudinal row, with a lateral face of said group engaging a relatively thin plate-like member having substantial rigidity, folding laterally about said group and associated plate-like member a strip-like carton blank, in such manner as to tension the blank longitudinally and overlap the end margins thereof, uniting the overlapped end margins to complete an open-ended tubular container, and thereafter separating said plate-like member from the assemblage by a relative endwise or longitudinal movement.

22. In the art of packaging cylindrical bottles of beverage or the like, the method which comprises positioning a group of such bottles, aligned in at least one longitudinal row, upon a relatively thin, plate-like support, placing upon said group a strip-like carton blank having bottle-neck receiving apertures in an intermediate portion thereof spaced apart to correspond to the arrangement of the bottles in the group, so that the bottle necks project through said apertures, pressing such intermediate portion downwardly against the bottle shoulders and snugly conforming adjacent portions of the blank to the two opposed vertical longitudinal faces of the bottle group, folding the remaining portions of the blank inwardly and against the under side of said plate-like support with their end margins overlapping, uniting the overlapped margins, and removing said support from the assemblage through an open end of the resultant tubular carton by a relative endwise or longitudinal movement.

23. The invention defined in claim 22, further characterized by the fact that said carton blank is provided, at the locality of bending around the lower longitudinal edges of the bottle group, with a series of edge-receiving apertures, one for at least each end bottle of the group, spaced apart transversely of the blank and in substantial alignment, longitudinally of the blank, with the corresponding bottle-neck receiving apertures, respectively; and by the fact that, in forming the tubular carton as stated, the material of the blank is so tensioned and the thickness of said plate-like support is such that, even after removal of said support from the completed package, the outside lower edges of the bottles for which said edge-receiving apertures are provided project into said apertures to an extent sufficing to provide resistance to accidental dislodgment of bottles through the open ends of the carton.

24. In the art of packaging filled bottles, cans or other generally columnar articles, the method which comprises grouping a small plurality of such articles in rectilinear arrangement, then folding circumferentially about the top, bottom and two opposed vertical faces of the article group a carton blank consisting of a strip or band of paperboard or the like, into close engagement with said faces, and uniting the end margins of said strip to complete an open-ended tubular container, the flexibility of said blank being increased at certain localities by transverse aperturing to facilitate bending it about and conforming it snugly to edges or shoulders between adjacent faces of said article group.

25. In the art of packaging flat-top cylindrical cans of goods, the method which comprises folding laterally about a group of such cans, aligned in at least one longitudinal row, a strip-like carton blank provided intermediate its ends with four parallel transverse series of apertures adapted and arranged to engage the top and bottom edges or rims of at least the end cans of said group, overlapping the end margins of the blank, and uniting said end margins to complete an open-ended tubular container, while holding the blank so snugly conformed to the article group that said apertures have sufficient locking engagement with said edges or rims to resist accidental egress of the end cans through the open container ends.

26. In apparatus for packaging substantially rigid columnar articles having at least one flat end, such as bottles or cans, a series of flat plate-like members adapted to engage a flat-end face of a generally rectangular group of such articles, suitably actuated means for supporting said members and moving the same longitudinally in a definite path of travel, in combination with means for delivering such an article group into flat-end engagement with each said plate-like member, means operable to apply a carton-forming strip circumferentially about the thus assembled article group and member, transversely of the path of travel, and unite the strip ends to form an open-ended container, and means at another point in said path operable to separate said member from the assemblage by relative longitudinal movement.

27. In apparatus for packaging substantially rigid columnar articles having at least one flat end, such as bottles or cans, an endless conveyor having a plurality of elongated and relatively thin flat carrier plates each pivotally secured thereto adjacent one of its ends whereby it can swing edgewise, and means arranged to maintain said plates virtually horizontal over a substantial path of travel, of means for delivering successive groups of such articles to stand upright upon said plates, respectively, means operable to apply a carton-forming strip circumferentially about each article group and its associated carrier plate, transversely of said conveyor, and to unite the strip ends to form an open ended container, and mechanism adjacent a later point in said path of travel for swinging the resultant assemblage laterally and stripping the completed package from the carrier plate at its free end.

ERNEST M. BROGDEN.
RONALD R. BROGDEN.