(No Model.)

W. H. GRAFFORD.

WIRE STRETCHER.

No. 590,885. Patented Sept. 28, 1897.

Fig. 1.

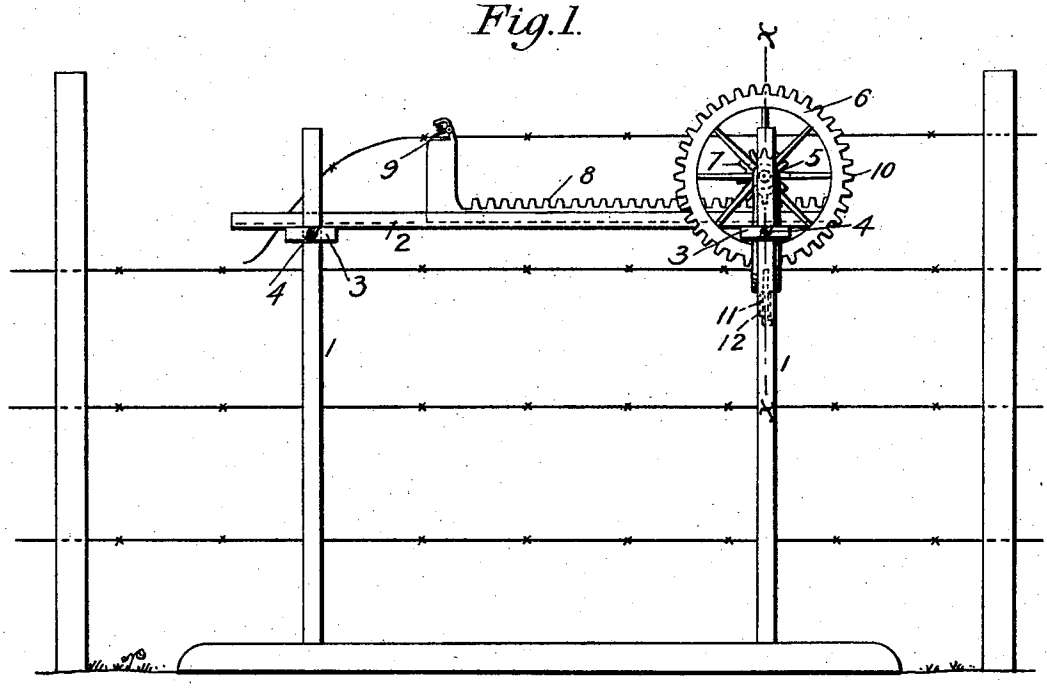

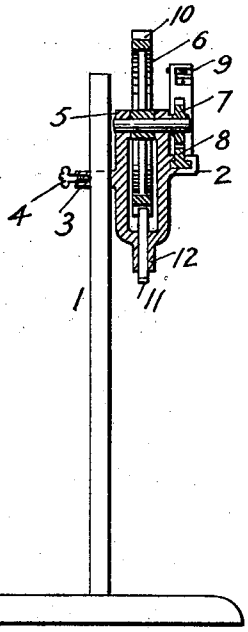

Fig. 2.

Witnesses:
J. S. Bowen.
J. A. Wellson.

Inventor:
Willis H. Grafford,
By H. B. Wellson
Attorney

THE NORRIS PETERS CO., PHOTO-LITHO., WASHINGTON, D. C.

UNITED STATES PATENT OFFICE.

WILLIS H. GRAFFORD, OF NEBO, ILLINOIS, ASSIGNOR OF ONE-HALF TO THOMAS J. SCRANTON, OF SAME PLACE.

WIRE-STRETCHER.

SPECIFICATION forming part of Letters Patent No. 590,885, dated September 28, 1897.

Application filed May 14, 1897. Serial No. 636,595. (No model.)

To all whom it may concern:

Be it known that I, WILLIS H. GRAFFORD, a citizen of the United States, residing at Nebo, in the county of Pike and State of Illinois, have invented certain new and useful Improvements in Wire-Stretchers; and I do declare the following to be a full, clear, and exact description of the invention, such as will enable others skilled in the art to which it appertains to make and use the same.

My invention has relation to wire-stretchers.

The object is to provide a simple, strong, and inexpensive device of this character which may be easily operated and which will effectively stretch the fence-wires to take up all sag.

With this object in view the invention consists of certain features of construction and combination of parts which will be hereinafter fully set forth and claimed.

In the accompanying drawings, Figure 1 is a side view of my improved wire-stretcher, and Fig. 2 is a cross-section on the line *x x* of Fig. 1.

In said drawings, 1 denotes two supports or posts, and 2 denotes a track which is provided with sleeves 3, that are adjustably connected to the posts by set-screws 4. One of these sleeves also carries bearings 5, in which is journaled an operating-wheel 6, provided with a pinion 7, which engages a rack-bar 8, mounted to slide in said track, as more clearly shown in Fig. 2. This rack-bar at one end is provided with a wire clamp or holder 9, which is adapted to clamp the wire to be stretched.

The periphery of the operating-wheel is provided with teeth 10, which are adapted to be engaged by a bolt 11, moving in a guide 12, secured to the under side of the track.

In operation the wire to be stretched is engaged with the clamp that is carried by the end of the rack-bar, and by rotating the wheel its pinion will force the rack-bar outwardly, and thus stretch the wire. To hold the wire in this stretched position, I slide the bolt into engagement with the teeth on the operating-wheel, thus locking said wheel against rotation.

By referring to Fig. 2 it will be seen that the rack-bar has laterally-projecting flanges which fit within the track, the rack portion of the bar projecting up through a longitudinal slot in the track.

Although I have specifically described the construction and relative arrangement of the several elements of my invention, I do not desire to be confined to the same, as such changes or modifications may be made as clearly fall within the scope of my invention without departing from the spirit thereof.

Having thus described my invention, what I claim, and desire to secure by Letters Patent, is—

A wire-stretcher comprising the two upright posts attached to a base, the track 2 vertically adjustable on said posts, a rack-bar mounted to slide on said track and having a wire-clamp on a stud rising from one end thereof, the pinion and gear for sliding the rack-bar, and a sliding bolt mounted in the frame and designed to engage the teeth of the operating-wheel for holding the same against rotation, substantially as described.

In testimony whereof I hereunto affix my signature in presence of two witnesses.

WILLIS H. GRAFFORD.

Witnesses:

J. F. RUYLE,

C. H. BUSH.