Nov. 28, 1944. A. TAYLOR 2,363,817

PRINTING PROCESS AND MECHANISM

Filed Sept. 14, 1942 2 Sheets-Sheet 1

Fig:1.

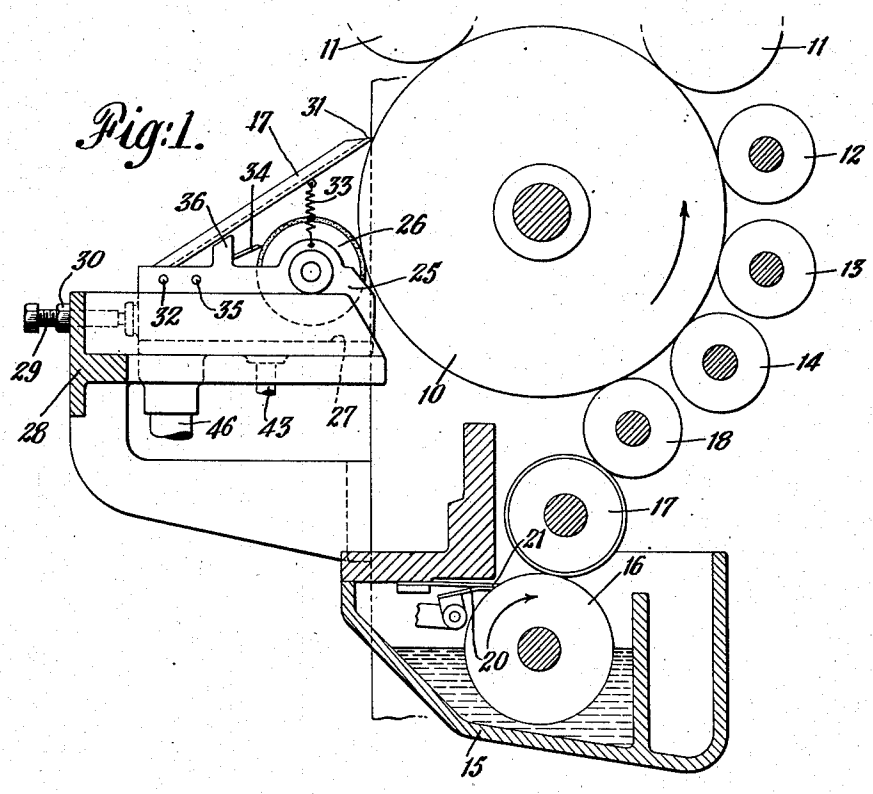

Fig:4.

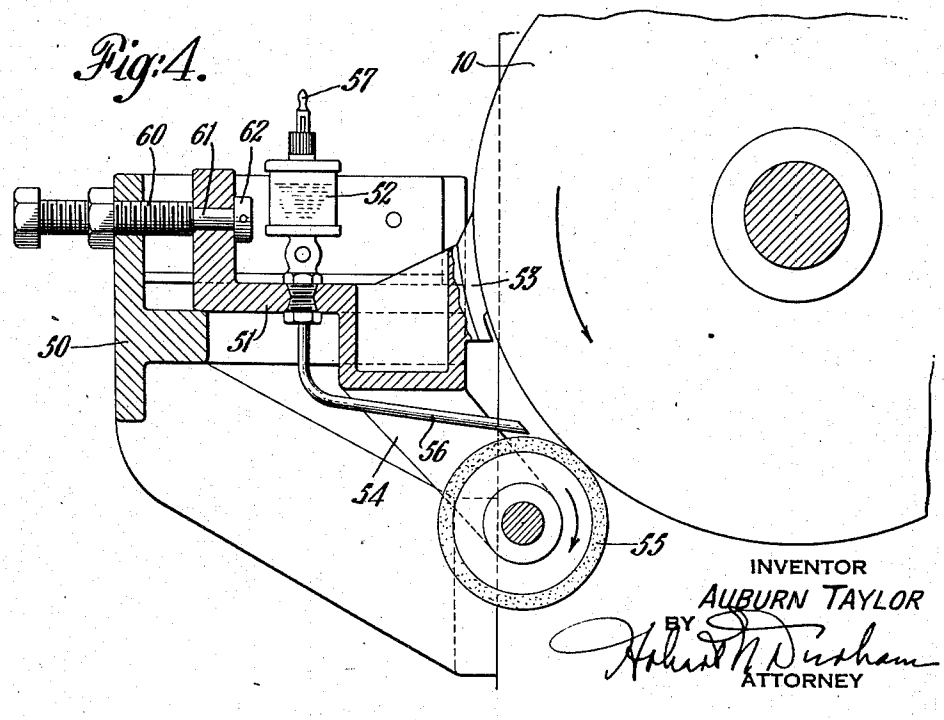

INVENTOR
AUBURN TAYLOR
BY
Richard N. Dinsham
ATTORNEY

Nov. 28, 1944. A. TAYLOR 2,363,817

PRINTING PROCESS AND MECHANISM

Filed Sept. 14, 1942 2 Sheets-Sheet 2

Fig: 2.

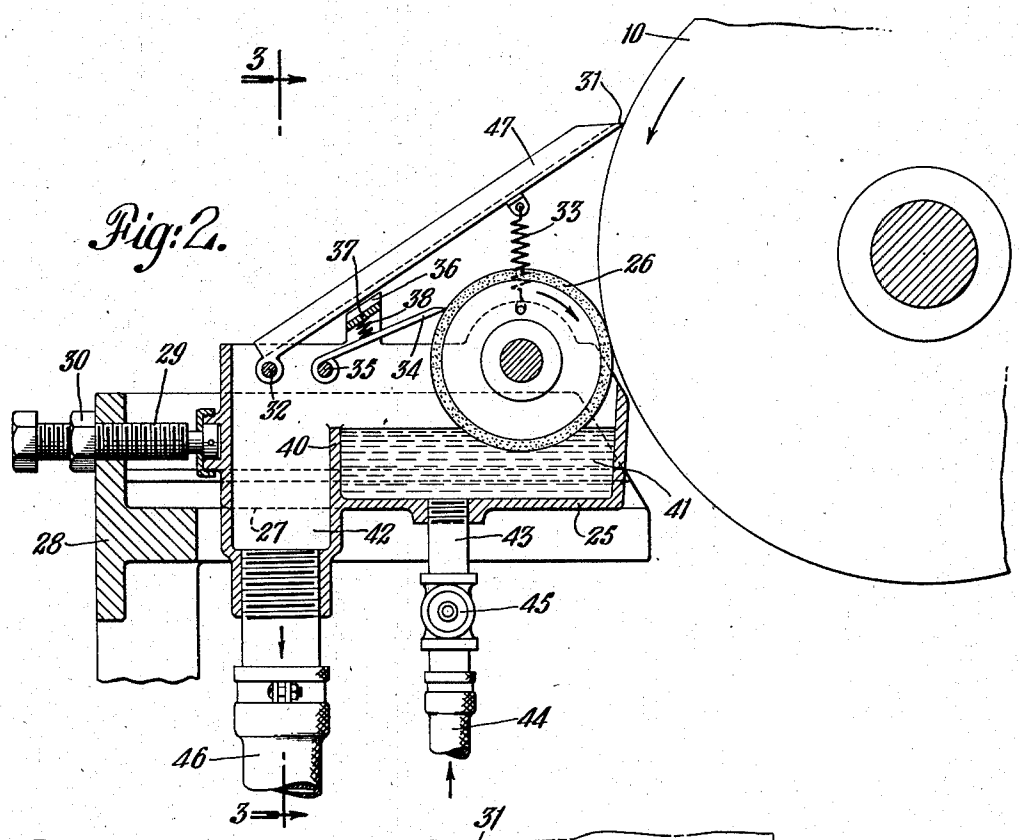

Fig: 3.

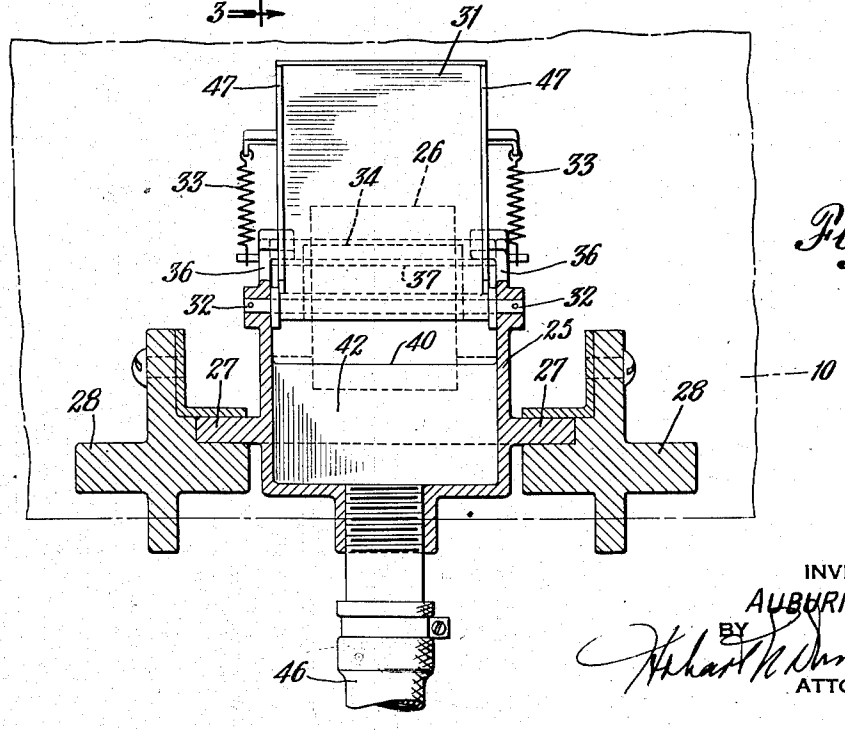

INVENTOR
AUBURN TAYLOR
BY
ATTORNEY

Patented Nov. 28, 1944 2,363,817

UNITED STATES PATENT OFFICE

2,363,817

PRINTING PROCESS AND MECHANISM

Auburn Taylor, Charleston, W. Va., assignor to The Goss Printing Press Company, Chicago, Ill., a corporation of Illinois

Application September 14, 1942, Serial No. 458,179

18 Claims. (Cl. 101—350)

The present invention relates to a new and improved process and mechanism for printing.

Objects and advantages of the invention will be set forth in part hereinafter and in part will be obvious herefrom, or may be learned by practice with the invention, the same being realized and attained by means of the instrumentalities, processes, steps and combinations pointed out in the appended claims.

The invention consists in the novel parts, constructions, arrangements, processes, steps, combinations and improvements herein shown and described.

The accompanying drawings, referred to herein and constituting a part hereof, illustrate one embodiment of, and a form of apparatus for carrying out the process of the invention, and together with the description, serve to explain the principles of the invention.

It is an object of the present invention to provide in the process of printing a method and means for maintaining the inking mechanism of the printing press in a clean condition in order to obtain the best printing results. A further object is the provision of a method and means for removing hardened bits of ink which collect on the inking mechanism of a printing press in places from which it is not picked up for impression on the printed product. Still another object is the provision of a method and means for removing surplus ink from portions of the inking mechanism of the printing press which correspond to margins on the form means and printed product, whereby the collection of troublesome deposits of ink is prevented. The invention further provides a method and means for removing ink from the ink drum of a rotary printing press at places where the ink may be deposited by action of the inking rollers but from which ink is not drawn in supplying ink to the form means and printed product. The invention also provides method and means for preventing the collection of hardened deposits of water-base ink on the inking mechanism of a printing press when water-base inks are used therein.

Of the drawings:

Fig. 1 is a side view partly in section and partly in elevation of the inking mechanism of a rotary printing press embodying the present invention;

Fig. 2 is a vertical sectional view of the ink drum cleaning means shown in Fig. 1 on a slightly enlarged scale;

Fig. 3 is a vertical sectional view taken along line 3—3 of Fig. 2; and

Fig. 4 is a vertical sectional view of a modified embodiment of the ink drum cleaning means of the present invention.

In a typical and illustrative embodiment of the means of the present invention with which the method of the present invention may illustratively be practiced, a rotary printing press is provided with an inking mechanism for the form roller which comprises an ink drum of relatively large diameter over which ink is distributed in a thin and uniform enveloping film for transfer to the form roller by a pair of transfer rollers. A plurality of inking rollers are distributed about the ink drum in peripheral contact therewith for distributing ink over the surface of the ink drum, and these rollers and the ink drum may have relatively axially reciprocating movement in order to more thoroughly distribute the ink.

An ink fountain is provided as a source of ink for the inking mechanism, and has rotatably mounted therein a fountain roller from which ink is transferred to the ink drum by means of a spiral or multiple disk roller to rotate in ink film interference with the ink on the fountain roller and a transfer roller to convey the ink from the spiral or multiple disk roller to the ink drum. A fountain blade and a page cutoff blade are provided in conjunction with the fountain roller for columnar adjustment of color intensity in the printed product and silencing or blanking out page widths in the inking mechanism when less than capacity numbers of pages are to be printed on the press.

Means are provided for removing ink from areas of the surface of the ink drum which do not supply ink to the form roller, and these areas occur at areas corresponding to margins on the form roller and the printed product. Although effort may be made in the construction of the inking mechanism to prevent distribution of ink to these areas where it is not used up and may collect and perhaps harden, it is found that such deposits do build up at the ends of the inking rollers as a result of rolling the ink between the inking rollers and the ink drum. This troublesome collection of ink is increased when the ink drum and inking rollers have relative axially reciprocating motion in the press in order to more thoroughly distribute the ink, as in this case the ink is directly carried to such areas of the ink drum by the inking rollers. When less than a capacity number of pages are to be printed on the press the form on the form roller will occupy only a fraction of the total width of that

roller, and the page cutoff blade is then adjusted to the fountain roller in order to prevent so far as possible the supply and distribution of ink to the ink drum at areas from which ink is not transferred by the transfer rollers to the form roller. In this instance, too, the inking rollers tend to squeeze ink into areas of the ink drum from which it will not be exhausted in printing, and relatively axially reciprocating movement of the inking rollers and the ink drum increases the difficulty. The collection of ink is particularly difficult and troublesome when water-base inks are used for printing on the press, for the gelling characteristics of the ink and the evaporation of the water will result in hard deposits of ink on portions of the ink drum.

There is, therefore, provided, in accordance with an illustrative embodiment of the present invention, a cleaning roller preferably of rubber or rubber-like composition surface to rotate against the surface of the ink drum at areas such as those mentioned where ink collects and is not used up. Means are provided for supplying an ink softening agent to the surface of this roller to be transferred to the ink drum, and a scraper blade is provided to remove the softened ink from the surface of the ink drum.

As illustratively embodied the cleaning roller may rotate in a cleaning fountain to which cleansing agent is supplied or, in accordance with another illustrative embodiment of the invention, a sight-feed oiler may be utilized to provide measured and desired quantities of cleansing agent to the cleaning roller.

It will be understood that the foregoing general description and the following detailed description as well are exemplary and explanatory of the invention but are not restrictive thereof.

Referring now to the illustrative embodiments of the present invention shown by way of example in the accompanying drawings, the inking mechanism of a rotary printing press may comprise an ink drum **10** from the surface of which ink is transferred by transfer rollers **11** to the form roller (not shown) of the printing press. Inking rollers **12**, **13**, **14** are grouped about the ink drum **10** to distribute a relatively thin and uniform film of ink thereon, and in many presses the construction is conventionally such that the inking rollers and the ink drum will have relatively axially reciprocating movement, while in other presses there is not this movement.

An ink fountain **15** has rotatably mounted therein a fountain roller **16**, from which ink is transferred to ink drum **10** by a spiral or multiple disk roller **17**, such as shown and described in prior U. S. Patent No. 2,154,544, and a transfer roller **18**. A fountain blade **20** and page cutoff blade **21** of known and conventional construction are provided in conjunction with the fountain roller **16** for the respective purposes of making columnar adjustments in the color intensity of the ink in the printed product, and of cutting off the supply of ink to page wide portions of the ink drum when the form on the form roller has corresponding blank page widths.

The embodied cleaning means for the ink drum, as shown in detail in Figs. 2 and 3, comprises a fountain **25** for cleansing agent and a relatively short cleaning roller **26** mounted therein to pick up cleansing agent for transfer to the surface of the ink drum **10**. The fountain, by means of a pair of integral guide members **27** is slidingly mounted upon a support **28** which may be conveniently and securely fixed to the frame (not shown) of the printing press. An adjustment screw **29** threaded through the support **28** and attached to the fountain **25** allows the fountain and its appurtenant parts to be moved toward the drum **10** for operation or to be moved away from the drum out of operating position. A jam nut **30** on screw **29** may be tightened against support **28** in order to fix the position of the fountain assembly.

A scraper blade **31** is pivotally mounted by a pin **32** through the walls of fountain **25** and its forward edge is spring biased by a pair of coiled springs **33** against the surface of ink drum **10**. A smaller scraper blade **34** is pivotally mounted on pin **35** and its forward scraping edge lies against the surface of cleaning roller **26**. A pair of inwardly turned projections **36** are formed integral at the tops of the lateral walls of the fountain **25** as rests for blade **31** when the cleaning assembly is moved back from ink drum **10** and out of operating position. A plate **37** extends between the projections **36** and a coiled spring **38** is positioned between it and the smaller blade **34** to bias the latter member against roller **26**.

The fountain **25** is divided by means of a baffle plate **40** into a reservoir section **41** and an exit section **42**. Cleansing fluid enters through the bottom of reservoir section **41** by a pipe **43** which is provided with a flexible length of hose **44** to the source of cleansing agent (not shown), a hand valve **45** being positioned in the line to control the flow of cleansing agent into the fountain. The exit section **42** of the fountain is connected by a flexible exit hose **46** to a suitable place of disposal for used cleaning fluid. The cleansing agent entering reservoir section **41** will suitably supply the roller **26** for transfer to the ink drum **10**, and the excess will flow over baffle **40** and out hose **46**. This circulation will also carry away ink cleaned from ink drum **10** by scraper blade **31**, which is formed as a channel by means of side members **47**.

A modified embodiment of the inking mechanism cleaning means of the present invention is shown in Fig. 4. In this embodiment a support **50** is provided suitably fixedly mounted on the printing press frame (not shown) and has slidably mounted thereon a frame **51** which carries a sight-feed oiler cup **52** of familiar and conventional design. A scraper blade **53** is also mounted on the slidable frame **51** to engage the surface of ink roller **10**, and a depending arm **54** of the frame carries the rotatably mounted cleaning roller **55** which is surfaced with rubber or rubber-like composition material. A small pipe **56** conveys cleansing agent from the sight-feed oiler **52** for deposit upon the surface of roller **55**, and the flow of the cleansing agent is controlled by the lever **57** positioned at the top of the oiler. The frame member **51** and its appurtenant parts are adjusted and fixed in position similarly to the embodiment already described by means of a screw **60** threaded through the support **50** and having a non-threaded length **61** passing through an aperture in frame **51** with a lug **62** fixed to its end, whereby the cleaning assembly may be withdrawn from its operating position adjacent ink drum **10**.

In its operation the cleansing means of the present invention is utilized to maintain the ink drum **10** free of ink deposits which build up in the operation of the inking mechanism. When capacity number of pages is being printed on the press ink drum **10** will be covered with ink for substantially its entire length, except for mar-

ginal areas at its ends which do not correspond to portions of the form on the form roller to be inked. The action of the inking rollers 12, 13, 14 in working the ink between themselves and the ink drum 10 results in squeezing portions of ink into the marginal areas from which it is not transferred to the form cylinders. This deposit is increased, of course, in presses in which the ink drum 10 and inking rollers 12, 13, 14 have relative reciprocating axial movement, for the ink is then forced bodily into the marginal areas. In order to remove these deposits as they form the roller 26 of the embodiment of Figs. 1 and 2 is positioned to rotate against the ink drum in these areas to apply cleansing agent, and the ink which is thereby softened is removed by scraper blade 31. This embodiment provides for continuous circulation of cleansing agent through the fountain 25 and the continuous removal of the waste ink through exit line 46. The action of roller 26 is automatic in its operation in rotating with the ink drum 10. When the area of ink drum 10 which roller 26 is positioned to contact becomes dry, the rubber or similarly covered roller 26 begins to rotate, picking up sufficient water or other cleansing agent from the fountain 25 to moisten ink drum 10, and the scraper blade 31 may remove the softened deposits. The cleansing agent thus applied to ink drum 10 acts as a lubricant, and roller 26 will cease to rotate after an amount of cleansing agent has been applied. By adjusting the pressure with which roller 26 bears against ink drum 10, the amount of cleansing agent applied before roller 26 is rendered inactive may be determined, or the pressure may be so adjusted that rotation of roller 26 against ink drum 10 will be continuous during rotation of the latter.

In the embodiment of Fig. 4 the action of roller 55 and scraper blade 53 is similar, and in this construction the cleansing agent may be supplied to the roller 55 in carefully measured amounts by adjustment of the oiler 52 which is the reservoir for the cleansing agent.

The cleaning assemblies of the present invention may be spaced along the length of ink drum 10 at places corresponding to the page divisions of the form roller, so that ink drum 10 may be kept clean when less than the full page capacity of the form roller is utilized. Thus one or more page width forms may be left off or one or both ends of the form roller, and the page cutoff blade 21 is adjusted to prohibit supply of ink to areas of the surface of the ink drum corresponding to these portions of the form roller. The action of the inking rollers 12, 13, 14 is, in this case as well, to distribute ink to portions of the ink drum from which it is not transferred to the form roller for printing, and the cleaning assemblies at those positions may be put into operation to remove the ink deposits.

The cleansing agent used to soften the ink so that it may be easily and surely removed will ordinarily be preferably a solvent for the solid materials used in the ink. In the case where water base ink is used in printing on the press, the deposits of ink referred to are particularly difficult and result in hard carbon deposits on the ink drum. In this case water or a solution of glycerin and water have been found to be a suitable cleansing agent to supply to the fountain 25 of the embodiment of Figs. 1 and 2 or to the sight-feed oiler 52 of the embodiment of Fig. 4.

The invention in its broader aspects is not limited to the specific mechanisms, process and steps shown and described but departures may be made therefrom within the scope of the accompanying claims without departing from the principles of the invention and without sacrificing its chief advantages.

What I claim is:

1. In a rotary printing press having an ink drum supplying ink to a member to be inked and axially reciprocating vibrating rollers to distribute ink over the surface of the ink drum, in combination, means for applying ink softening agent to the surface of the ink drum at an area not supplying ink to the member to be inked and receiving ink distributed by the vibrating rollers, and means for removing softened ink from the area.

2. In a rotary printing press having an ink drum supplying ink to a member to be inked and inking rollers to distribute ink over the surface of the ink drum, the ink drum and inking rollers having relatively axially reciprocating movement, in combination, means for applying ink softening agent to the surface of the ink drum at an area not supplying ink to the member to be inked and receiving ink distributed by the inking rollers, and means for removing softened ink from the area.

3. In a rotary printing press having an ink drum supplying ink to a member to be inked and inking rollers to distribute ink over the surface of the ink drum, in combination, means for applying ink softening agent to the surface of the ink drum at an area not supplying ink to the member to be inked and means for removing softened ink from the area.

4. In a rotary printing press having an ink drum supplying ink to a member to be inked and an inking roller to distribute ink over the surface of the ink drum, in combination, means for applying ink softening agent to the surface of the ink drum at an area adjacent the end of the inking roller and means for removing softened ink from the area.

5. In a printing press having a form member and an inking member for supplying ink to the form member, in combination, means for applying ink softening agent to an area of the inking member corresponding to an area adjacent a margin of the form on the form member and means for removing softened ink from the area of the inking member.

6. In a rotary printing press for printing with water-base ink having an ink drum supplying water-base ink to a member to be inked and inking rollers to distribute water-base ink over the surface of the ink drum, in combination, means for applying water to the surface of the ink drum at an area not supplying water-base ink to the member to be inked for softening hardened water-base ink thereon and means for removing the softened water-base ink from the area.

7. In a rotary printing press for printing with water-base ink having an ink drum supplying water-base ink to a member to be inked and inking rollers to distribute water-base ink over the surface of the ink drum, in combination, means for applying glycerin water solution to the surface of the ink drum at an area not supplying water-base ink to the member to be inked for softening hardened water-base ink thereon and means for removing the softened water-base ink from the area.

8. In a rotary printing press having an ink drum supplying ink to a member to be inked and inking rollers to distribute ink over the surface

of the ink drum, in combination, means for applying ink softening agent to the surface of the ink drum at an area not supplying ink to the member to be inked and means including a scraper blade having an edge against the ink drum at the area for removing softened ink from the area.

9. In a rotary printing press having an ink drum supplying ink to a member to be inked and inking rollers to distribute ink over the surface of the ink drum, means for applying ink softening agent to the surface of the ink drum at an area not supplying ink to the member to be inked said means comprising a fountain for ink softening agent and a roller mounted for rotation in the fountain to have peripheral contact with the surface of the ink drum at said area, and means for removing softened ink from said area.

10. In a rotary printing press having an ink drum supplying ink to a member to be inked and inking rollers to distribute ink over the surface of the ink drum, means for applying ink softening agent to the surface of the ink drum at an area not supplying ink to the member to be inked said means comprising a roller to have peripheral contact with the ink drum at said area and means for applying ink softening agent to the surface of the roller, and means for removing softened ink from said area.

11. In a rotary printing press having an ink drum supplying ink to a member to be inked and inking rollers to distribute ink over the surface of the ink drum, means for applying measured amounts of ink softening agent to the surface of the ink drum at an area not supplying ink to the member to be inked and means for removing softened ink from said area.

12. In a rotary printing press having an ink drum supplying ink to a member to be inked and inking rollers to distribute ink over the surface of the ink drum, means for applying measured amounts of ink softening agent to the surface of the ink drum at an area not supplying ink to the member to be inked said means comprising a roller to have peripheral contact with the ink drum at said area and means for applying measured amounts of ink softening agent to the surface of the roller, and means for removing softened ink from said area.

13. In a rotary printing press having an ink drum as a source of ink for the members to be inked and vibrating rollers in peripheral contact with the ink drum, a cleaning roller in peripheral contact with the ink drum at a surface area engaged by the vibrating rollers and not supplying ink to the members to be inked, means for applying ink softening agent to the cleansing roller for transfer to the ink drum, and a scraper blade engaging the periphery of the ink drum at a surface area engaged by the vibrating rollers and not supplying ink to the members to be printed.

14. In a process of printing on a rotary press having an ink drum for supplying ink to a member to be inked the steps of applying ink softening agent to an area of the ink drum not supplying ink to the member to be inked and removing the softened ink from the ink drum.

15. In a process of printing on a printing press having a form member and an inking member for supplying ink to the form member the steps of applying ink softening agent to the inking member at an area corresponding to an area adjacent a margin of the form on the form member, and removing the softened ink from the area of the inking member.

16. In a process of printing on a rotary press having an ink drum for supplying ink to a member to be inked and inking rollers for distributing ink over the surface of the ink drum, the ink drum and inking rollers having reciprocating axial relative movement, the steps of applying ink softening agent to an area of the surface of the ink drum not supplying ink to the member to be inked and receiving ink distributed by the inking rollers, and removing the softened ink from the area.

17. In a process of printing with water-base ink on a printing press having a form member and an inking member for supplying water-base ink to the form member, the steps of applying water to the inking member at an area corresponding to a margin area of the form member to soften hardened water-base ink and removing the softened water-base ink from the area of the inking member.

18. In a process of printing with water-base ink on a printing press having a form member and an inking member for supplying water-base ink to the form member, the steps of applying water glycerin solution to the inking member at an area corresponding to a margin area of the form member to soften hardened water-base ink and removing the softened water-base ink from the area of the inking member.

AUBURN TAYLOR.