United States Patent [19]

Mosher

[11] **3,838,687**

[45] **Oct. 1, 1974**

[54] **PORTABLE MEDICAL TABLE INCLUDING SLIDABLY MOUNTED ANESTHESIA APPARATUS**

[76] Inventor: **William F. Mosher,** 3725 N. Federal Hwy., Pompano Beach, Fla. 33064

[22] Filed: **June 8, 1973**

[21] Appl. No.: **368,087**

[52] **U.S. Cl.** **128/188**

[51] **Int. Cl.** **A61m 19/00**

[58] **Field of Search** ..... 128/188, 191, 376, 399, 128/292, 1 R, 1 B, 30, 30.2, 298; 269/322–328; 296/20; 280/47.35

[56] **References Cited**

UNITED STATES PATENTS

1,648,631	11/1927	Austin	128/376
3,304,116	2/1967	Stryker	296/20
3,606,302	9/1971	Allard et al.	296/325

FOREIGN PATENTS OR APPLICATIONS

2,012,867	10/1971	Germany	269/322

Primary Examiner—Richard A. Gaudet
Assistant Examiner—Henry J. Recla
Attorney, Agent, or Firm—Oltman and Flynn

[57] **ABSTRACT**

A wheeled table for patients having a top that slopes to a drain opening and provided with an electrical heating element for warming the patient. A self-contained anesthesia apparatus is slidably suspended below the table top and may be pulled out readily for adjustment of dials, or servicing or replacement of any of its component parts.

6 Claims, 5 Drawing Figures

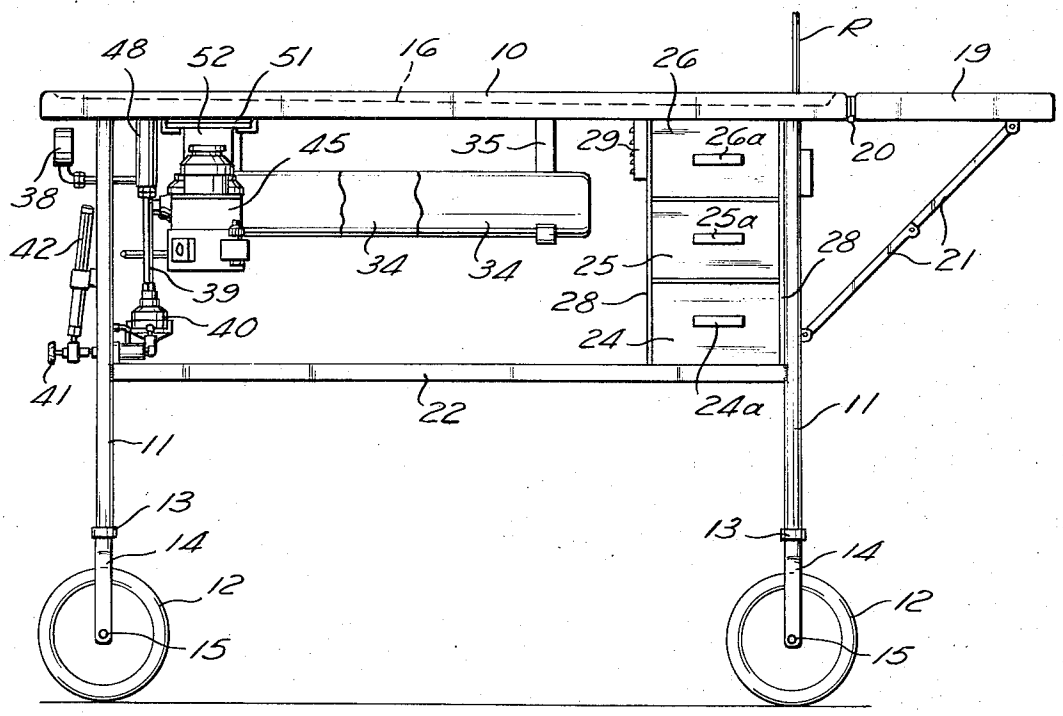

PATENTED OCT 1 1974

3,838,687

SHEET 1 OF 2

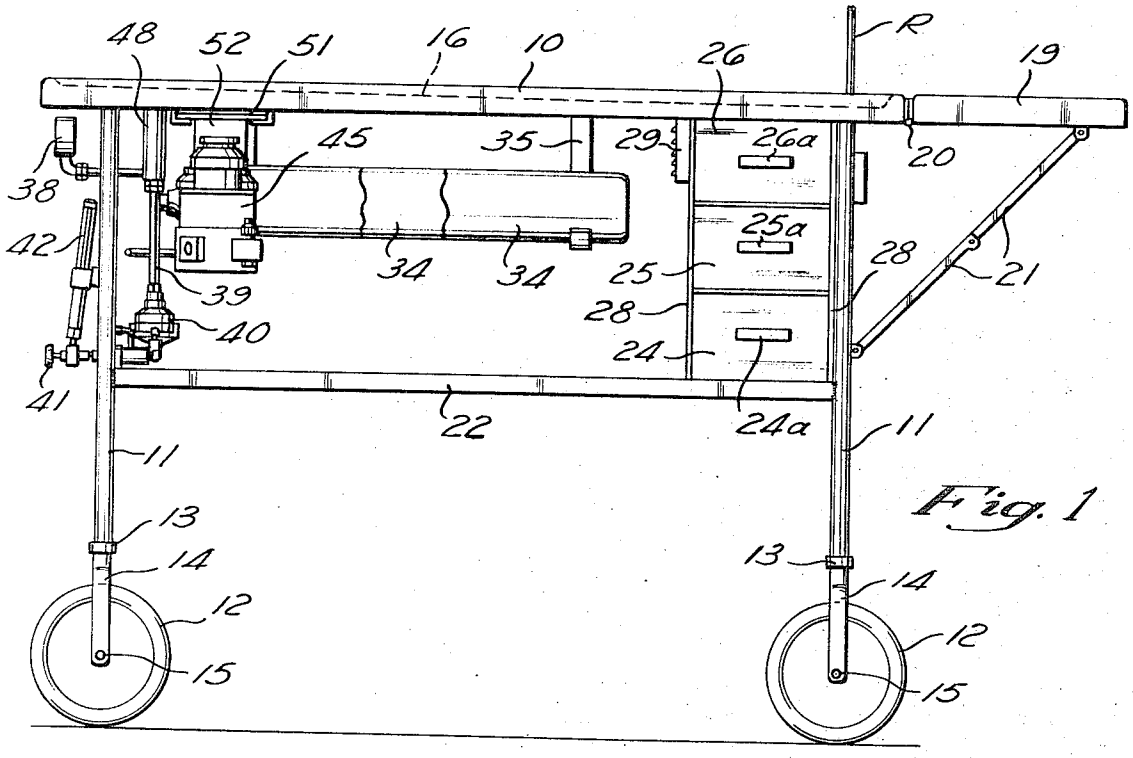

Fig. 1

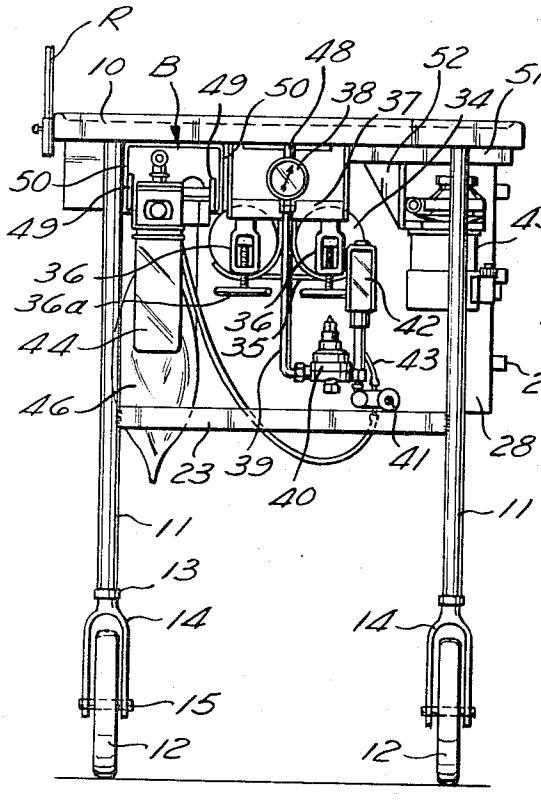

Fig. 2

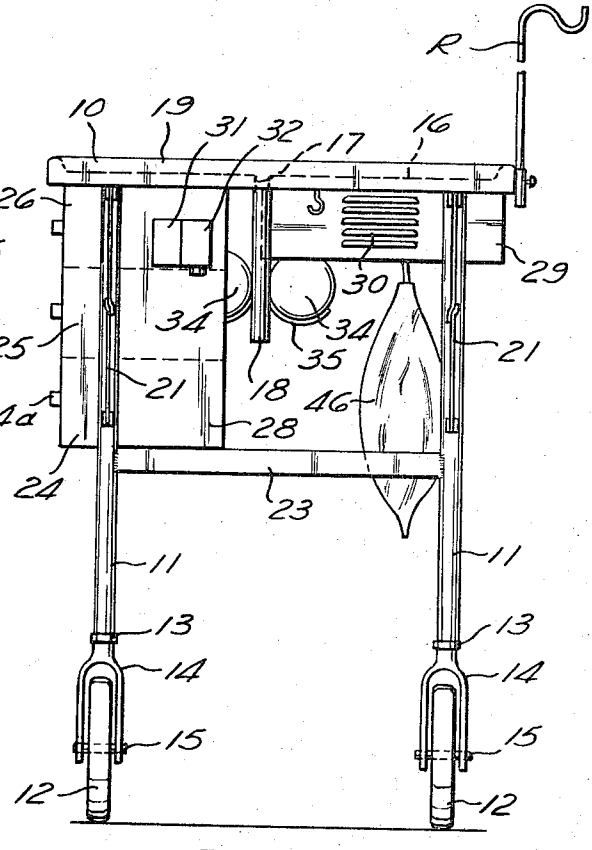

Fig. 3

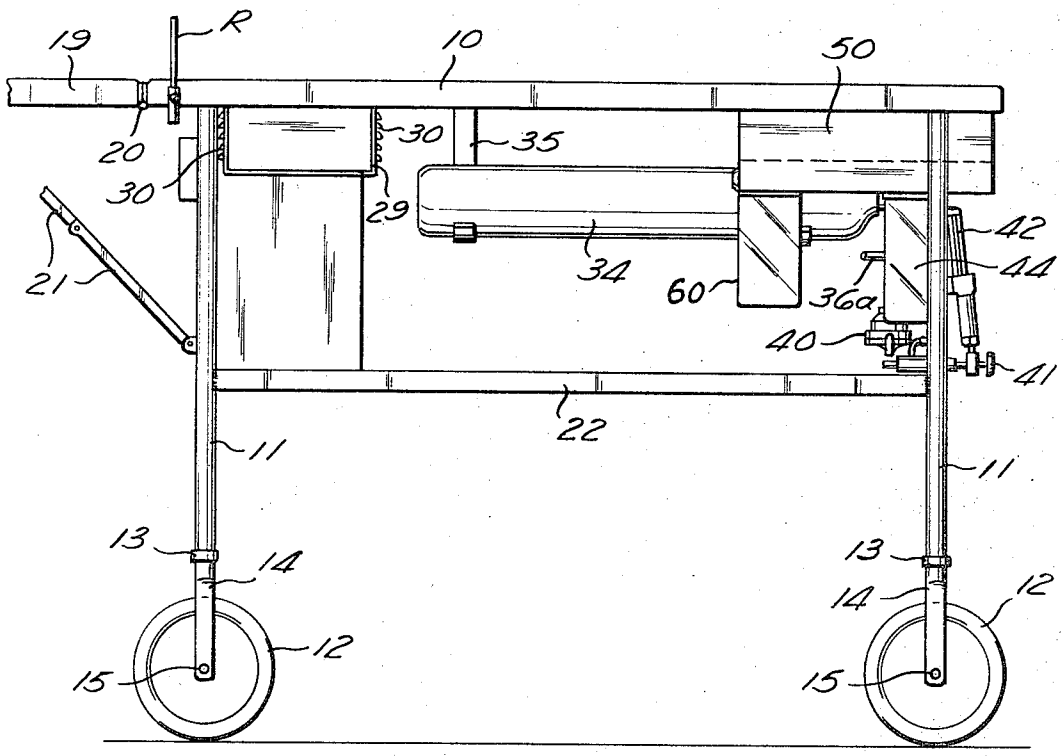
19
R
10
50
20
30
35
29
30
21
34
60
36a
42
44
40
41
22
11
11
13
14
12
15
13
14
12
15

Fig. 4

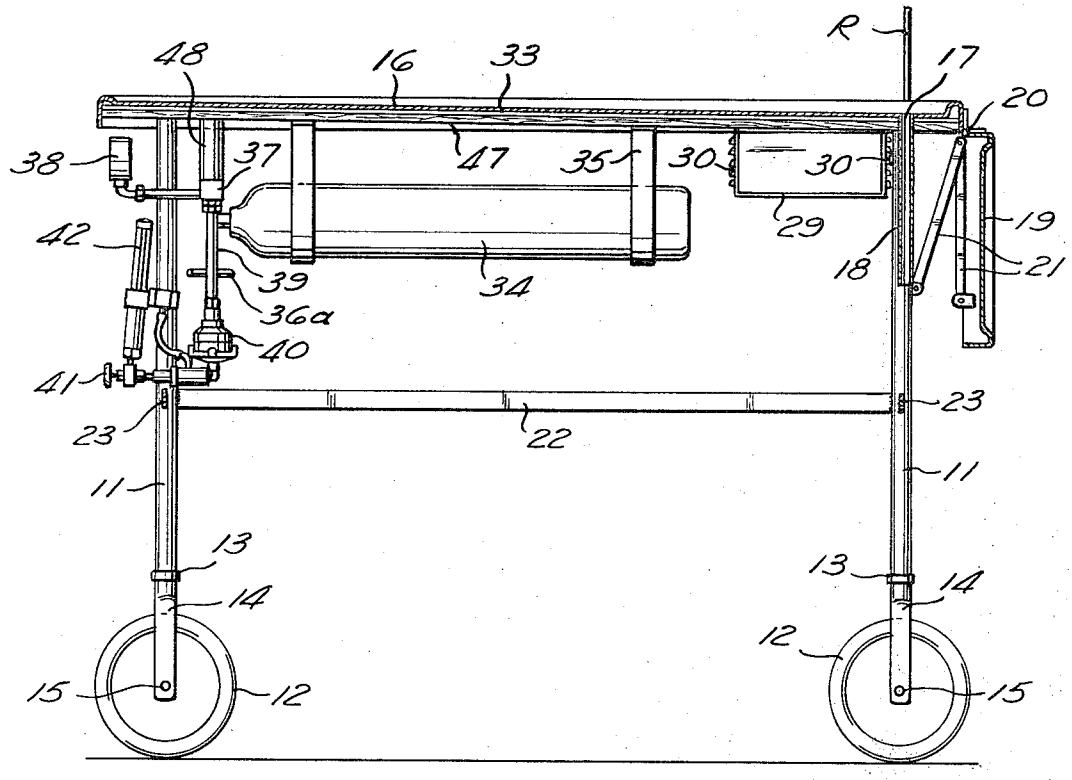
48
16
33
R
17
20
38
37
47
35
30
30
29
19
42
39
34
18
21
36a
40
41
23
22
23
11
11
13
14
13
14
12
15
12
15

Fig. 5

PORTABLE MEDICAL TABLE INCLUDING SLIDABLY MOUNTED ANESTHESIA APPARATUS

BACKGROUND OF THE INVENTION

In veterinary hospitals the animal patients often must be transported from a kennel, an examination room or a surgical preparation room to an operating room or an X-ray room. In some cases the animal may be critically injured or in shock and the usual methods of transporting the animal under these conditions are not totally satisfactory. In addition, when the usual methods of transporting the animal are employed there is no provision for anesthetizing and otherwise preparing the animal beforehand for the operation or X-rays.

Similar problems exist in connection with transporting a human patient in a hospital.

SUMMARY OF THE INVENTION

The present invention is directed to a wheeled, readily portable medical table which carries a self-contained anesthetic apparatus, enabling the patient to be anesthetized on this table before going to an operating room or X-ray room. The table has a top that may be heated in case the patient is severly injured or in shock. Examinations, dental procedures, the taking of specimens for analysis, and minor surgery or medical treatment of the patient may be performed on this table. Preferably, the table carries removable drawers and trays for sterile equipment.

A principal object of this invention is to provide a novel portable medical table which enables various procedures to be performed on a patient while on this table.

Another object of this invention is to provide a novel portable medical table which carries with it anesthesia apparatus for anesthetizing a patient while on the table.

Another object of this invention is to provide a novel portable medical table having a top which may be heated to warm the patient, particularly when in shock or if severely injured.

Another object of this invention is to provide a novel portable medical table which carries various equipment, tools and supplies, including anesthesia apparatus, which may be used in conjunction with surgery or various medical or dental procedures on the patient.

Further objects and advantages of this invention will be apparent from the following detailed description of a presently-preferred embodiment thereof, which is shown in the accompanying drawings, in which:

FIG. 1 is a front elevational view of the present portable medical table, with certain parts below the table top removed or broken away for clarity;

FIG. 2 is a left end elevational view of this table;

FIG. 3 is a right end view of this table;

FIG. 4 is a back elevational view of this table; and

FIG. 5 is a longitudinal sectional view taken centrally along the table.

Before describing the disclosed embodiment of the present invention in detail, it is to be understood that the invention is not limited in its application to the details of the particular arrangement shown, since the invention is capable of other embodiments. Also, the terminology used herein is for the purpose of description and not of limitation.

Referring to the drawings, the illustrated embodiment of the present invention has a substantially horizontal table top **10** supported by four tubular, vertical legs **11**, each extending up from a rubber-tired wheel **12**. Preferably, the lower end of each table leg has a swivel connection at **13** to a bifurcated yoke **14** which carries the axle **15** for the respective wheel.

The table top **10** is covered with a sheet **16** of stainless steel that slopes downward from left to right in FIG. **5** to a drain opening **17** located midway between the legs **11** at the right end of the table. A discharge tube **18** extends down from this drain opening. Sheet **16** has a rolled edge.

A stainless steel extension leaf **19** is hinged at **20** to the right end of the table top **10** in FIGS. **1** and **5**. A collapsible pivoted linkage **21** acts between the underside of this leaf **19** and each table leg **11** at this end of the table to support the leaf **19** extending horizontally substantially co-planar with the table top **10**, as an extension of the latter (FIG. **1**), or to permit the leaf **19** to hang down from the table top, as shown in FIG. **5**.

Longitudinal braces **22** (FIGS. **1**, **4** and **5**) extend horizontally at the front and back between the respective end legs **11** of the table, about midway along the height of the legs. Cross braces **23** (FIGS. **2** and **3**) extend horizontally between the legs **11** at each end at the same vertical position as the longitudinal braces **22**.

At the front of the table (FIG. **1**) near its right end, three drawers **24**, **25**, **26** are slidably disposed one above the other between the table top **10** and the front longitudinal brace **22**. These drawers are mounted individually on suspension slides inside a generally rectangular, open-front housing **28** which extends down from the table top. Each drawer **24**, **25**, or **26** is open at the top only, and each has a respective pull handle **24***a*, **25***a* or **26***a* on the front. These drawers are small enough to fit in a small autoclave where they may be sterilized along with the medical instruments which they contain.

At the back of the table, directly behind the topmost drawer **26**, a three-sided tray **29** is slidably mounted for movement from a retracted position below the table top, as shown, to an extended position behind the table top. Each upstanding side of this tray has vent openings **30**. This tray is open at its front and back ends, as well as at the top.

Also, at the back of the table, near its right end in FIGS. **1** and **2**, is attached an upstanding rod R with a generally horizontal S-shaped upper end for the support of fluids for patient therapy, such as blood.

As best seen in FIG. **3**, a thermostat **31** and an electrical junction box **32** containing a power socket are mounted on the outer end wall of the housing **28** for the sliding drawers **24**, **25** and **26**.

An electrical resistance heating element **33** of any suitable design is located in the table top **10** below the stainless steel cover **16**. This heating element is energized by electrical power supplied to the socket in the junction box **32**, under the control of the thermostat **31**. The heating element **33** is so arranged as to warm the table top substantially uniformly across its complete extent when desirable for the comfort or health of the patient lying on it, such as when the patient is in shock. Preferably, the thermostat **31** regulates the heating element to maintain a temperature of about 75° F on the table top.

In accordance with an important aspect of the present invention, an inhalation anesthesia apparatus is

supported below the table top **10** so that it is ready for use wherever the table goes.

In the illustrated embodiment this apparatus includes two oxygen tanks **34,** which are suspended below the table top by hangers **35.** Each oxygen tank is provided with the usual hanger yoke **36** (FIG. **2**) containing an outlet valve for the tank that may be opened by turning a handle **36***a*. The outlet of each valve is connected to a manifold **37.** The gas pressure in this manifold is indicated by a pressure gage **38.** An outlet pipe **39** extends down from the manifold **37** to a pressure-reducing regulator **40.** From this regulator the oxygen flows through a manually adjustable needle valve **41** and through a flexible hose **43** in back up to a vaporizer **44.** A flow meter **42** indicates the gas pressure at the outlet side of the needle valve **41.**

In the vaporizer **44,** oxygen bubbles up through a suitable liquid anesthetic to produce an anesthetic vapor which is applied to the patient on the table top **10** through an inhalation check valve (not shown). The patient's exhalations flow through an exhalation check valve (not shown) to an absorber **60.** The breathing circuit includes suitable hoses (not shown) extending between the inhalation and exhalation check valves and the patient, and it may include a breathing bag **46,** if desired.

The rigidly-interconnected assembly of the oxygen tanks **34** and the cradle straps **35** which support them, the oxygen outlet manifold **37,** the pressure gage **38,** the outlet pipe **39,** the pressure regulator **40,** the needle valve **41** and the flow meter **42** is suspended from the table top **10** for adjustment between the normal, fully retracted position shown in the drawings and an extended position beyond the table top, to the left in FIGS. **1** and **5.** Each support strap **35** for the oxygen tanks has a T-shaped upper end, whose horizontal top leg is slidably received in corresponding fixed guideways **47** (FIG. **5**) on the bottom of the table top. Also, a T-shaped carrier **48** extends up from the oxygen manifold **37** and has its horizontal top leg slidably received in these same guideways **47.** This slidable support arrangement facilitates the replacement of used-up oxygen tanks **34** and the servicing or replacement of any part of the oxygen output flow line equipment, if necessary.

The vaporizer **44** is slidably suspended below the table top for adjustment between the fully retracted position shown and an extended position (to the left in FIGS. **1** and **5**) where it may be moved out for adjustment of dials or servicing. The vaporizer is mounted on a carrier having rollers **49** at each side which roll along upwardly-facing horizontal guideways provided by inturned flanges on the lower ends of depending walls **50.** These walls **50** are part of a rigid, rectangular, open-bottomed and open-ended support bracket B (FIG. **2**) that is attached to the underside of the table top.

Also, a second vaporizer **45** is slidably suspended below the table top for adjustment between the fully retracted position shown and an extended position, to the right in FIG. **2,** where it may be removed for servicing. A rigid support **51** fastened to the underside of the table top **10** provides ball bearing slides for engagement by a bracket **52** carrying the second vaporizer **45** and extending upward from the inner ends of this vaporizer.

From the foregoing description and the accompanying drawings, it will be apparent that the illustrated embodiment of this invention provides a self-contained, unitary, portable arrangement which enables a variety of procedures to be performed on a patient, particularly an animal, before going to an operating room or an X-ray room. Also, the present invention may be used for postoperative transportation of the patient. The drawers **24–26** and the tray **29** may hold a variety of sterile tools and supplies for use on the patient. In addition to anesthesis, various minor surgical or medical procedures, including the taking of specimens, may be performed on the patient while on this table. The top of the table may be heated to keep the patient warm, such as when in shock. If desired, suitable dental equipment (not shown) may be carried by the table so that necessary dental work may be performed on an animal patient while on the table.

I claim:

1. A portable medical table comprising:

a wheel-mounted table top for supporting a patient;

an inhalation anesthesia apparatus supported below said table top to be wheeled around in unison therewith, said anesthesia apparatus including one or more gas tanks and a pressure gage therefor, a pressure regulator connected to regulate the gas coming from said one or more tanks, a manually-adjustable valve at the outlet side of said regulator, a flow meter and a vaporizer at the outlet side of said valve, and an absorber connected to receive breath exhalations from the patient on the table;

and means slidably supporting the above-named components of the anesthesia apparatus for horizontal adjustment selectively between retracted positions of said components in which they are vertically below the table top and extended positions of said components in which they are exposed beyond the table top for use, adjustment, servicing or replacement.

2. A portable medical table according to claim **1,** wherein

said one or more tanks, pressure gage, pressure regulator, valve, and flow meter are slidably mounted below the table for movement as a unit;

said vaporizer is slidably mounted below the table top separate from said first-mentioned unit;

and said absorber is slidably mounted below the table top separate from said vaporizer and said first-mentioned unit.

3. A portable medical table according to claim **1,** wherein the upper surface of said table top slopes to a drain opening in the table top.

4. A portable medical table according to claim **1,** an further comprising an electrical heating element in said table top for warming the patient.

5. A portable table according to claim **4,** wherein the upper surface of said table top slopes to a drain opening in the table top.

6. A portable medical table according to claim **1,** wherein said one or more gas tanks, pressure gage, valve and flow meter are all supported from a common support that is slidably adjustable below the table top to carry said one or more gas tanks, pressure gage, valve and flow meter in unison between their respective retracted and extended positions.

* * * * *