April 8, 1958 E. R. MacLEAN 2,829,514

HOLLOW MASONRY BLOCK-ATTACHING DEVICE

Filed Dec. 13, 1955

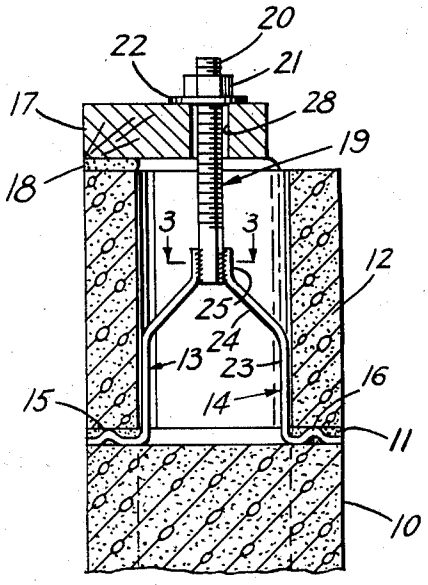

FIG. 1

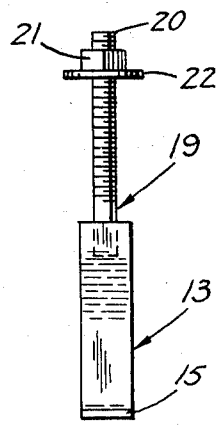

FIG. 2

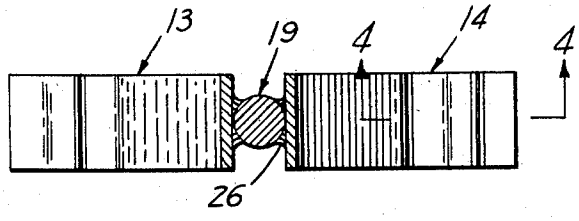

FIG. 3

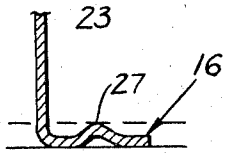

FIG. 4

INVENTOR.
ELDON R. MACLEAN
BY
McMorrow, Berman + Davidson
ATTORNEYS

United States Patent Office 2,829,514 Patented Apr. 8, 1958

2,829,514

HOLLOW MASONRY BLOCK-ATTACHING DEVICE

Eldon R. MacLean, Elmira, N. Y.

Application December 13, 1955, Serial No. 552,758

2 Claims. (Cl. 72—101)

The present invention relates to a device for attaching a sill to a hollow masonry block.

An object of the present invention is to provide a device for inserting in the top course of a hollow masonry block wall for anchoring a sill to the wall.

Another object of the present invention is to provide an attaching and anchoring bolt for use in a hollow masonry block, and one which has means which automatically centers and plumbs the bolt in the block.

A further object of the present invention is to provide an attaching and anchoring bolt for use in a hollow masonry block which has means for supporting itself within the block while the block is mortared and set in a course in a wall.

A still further object of the present invention is to provide an anchoring bolt for attaching a sill to a masonry block in a masonry block wall, one of simple structure, one economically manufactured in quantity, and one which saves the time and labor of the masons and carpenters constructing the wall.

These and other objects and advantages of the present invention will be fully apparent from the following description when taken in connection with the annexed drawing, in which:

Figure 1 is a sectional view of a building wall with the attaching device of the present invention installed within an upper block of the wall,

Figure 2 is an elevational view of the device of the present invention,

Figure 3 is a sectional view, on an enlarged scale, taken on the line 3—3 of Figure 1, and

Figure 4 is a sectional view taken on the line 4—4 of Figure 3.

Referring in greater detail to the drawing in which like numerals indicate like parts throughout the several views, the attaching device of the present invention comprises, in combination with a masonry wall designated by the reference numeral 10, a layer of mortar 11 on the top of the wall 10, and a hollow masonry block 12 supported upon and having the lower end supported in the layer of mortar 11, a pair of resilient legs 13 and 14 arranged in spaced upright relation and having feet 15 and 16, respectively, projecting from the lower end thereof.

When in use, the attaching device is positioned so that the legs 13 and 14 are within and frictionally engage the inner faces of the wall of the block 12 with the feet 15 and 16 below the lower end of the block 12 and embedded in the layer of mortar 11.

A sill 17 is supported on the upper end of the block 12. Another layer of mortar 18, or other filler, is interposed between the sill 17 and the upper end of the block 12 to fill any low spots in the surface of the block 12 and in the adjacent blocks which make up the top course of the wall.

An anchoring element, embodying a headless bolt 19 extends loosely through the sill 17 and has its lower end fixedly secured by welding to the upper ends of the legs 13 and 14. The bolt 19 has threads on the portion 20 that is above the sill 17 and a threaded nut 21 constituting a securing means, with a washer 22 interposed between the nut 21 and the adjacent portion of the sill 17, connects the sill 17 to the threaded upper end portion of the bolt 19.

The legs 13 and 14 are identical and will be described with reference to the leg 14. The leg 14 has a vertically disposed intermediate portion 23 which frictionally engages the inner face of the wall of the block 12 within any one of the hollow cores provided in the block 12. An upwardly-sloping portion 24 of the leg 14 connects the intermediate portion 13 with the end portion 25 which is vertically disposed and is attached by welding as at 26 in Figure 3 or other means to the lower end portion of the bolt 19. The foot 16 projects perpendicularly from the lower end of the intermediate portion 23 and has an arcuately-curved portion 27 intermediate its ends, as seen most clearly in Figure 4. The curved portion 27 gives the foot 16 an overall thickness substantially equal to the thickness of the layer of mortar 11 so that when the foot 16 is embedded in the layer of mortar, the leg 14 is rigidly held and the bolt 19 is both plumbed and centered in the hollow masonry block 12.

In use, the attaching device of the present invention is inserted into the block 12 from the bottom thereof before the block 12 is placed upon the layer of motor 11. The resiliency of the legs 13 and 14 cause the legs 13 and 14 to firmly grip the inner surface of the wall of the block 12 so that the block 12 may be handled and mortar applied thereto. The block 12 is then set in the mortar layer 11. The sill 17 which has been previously provided with a suitable hole 28 is then placed upon the upper end of the block 12 with the hole 28 receiving the upper end portion of the bolt 19. The washer 22 and the nut 21 are then placed upon the threaded upper end portion 20 of the bolt 19 and the nut is turned down tightly to securely attach the sill 17 to the upper end of the block 12. This may be done without waiting for the layer of mortar 11 to be cured or the space within the hollow block 12 around the legs 13 and 14 and around the bolt 19 may be filled with mortar or cement as desired before placement of the sill 17.

The attaching device of the present invention enables the mason to quickly and easily position the anchoring bolts in the walls and in the foundations of a building. The attaching device of the present invention eliminates the time and labor formerly used to center a vertically-disposed bolt in a wet mass of mortar placed within the uppermost one of a course of hollow blocks and also enables the carpenters to initiate their building operation without waiting for the mortar or cement to cure.

What is claimed is:

1. The combination with a building wall, a layer of mortar on the top of said wall, and a hollow block superimposed upon and having the lower end supported in said layer, of an attaching device comprising a pair of resilient legs arranged in spaced upright relation and each having a foot projecting from the lower end thereof positioned so that the legs are within and frictionally engage the hollow block with the feet below the lower end of said block and embedded in said layer, a sill supported upon the upper end of said block, an anchoring element extending loosely through said sill and having the lower end fixedly secured to the upper ends of said legs and having the portion adjacent the upper end above and spaced from said sill, and securing means connecting said sill to said upper end portion of said anchoring element.

2. The combination with a building wall, a layer of mortar on the top of said wall, and a hollow block superimposed upon and having the lower end supported in said layer, of an attaching device comprising a pair of resilient legs arranged in spaced upright relation and each

having a foot projecting from the lower end thereof positioned so that the legs are within and frictionally engage the hollow block with the feet below the lower end of said block and embedded in said layer, a sill supported upon the upper end of said block, an anchoring element embodying a bolt extending loosely through said sill and having the lower end fixedly secured to the upper ends of said legs and having the portion adjacent the upper end threaded and above said sill, and securing means embodying a nut threadedly engaging said upper portion of said anchoring element and a washer interposed between said nut and the adjacent portion of said sill connecting said sill to said upper end portion of said anchoring element.

References Cited in the file of this patent

UNITED STATES PATENTS

1,008,118	Crilly	Nov. 7, 1911
1,280,173	Cutler	Oct. 1, 1918
1,691,117	Kosack	Nov. 13, 1928
1,726,286	Bennet	Aug. 27, 1929
1,759,070	Tengstedt	May 20, 1930
1,944,787	Dusablon	Jan. 23, 1934
2,266,892	Mullen	Dec. 23, 1941
2,390,379	Martin	Dec. 4, 1945