Feb. 4, 1964 D. S. ROWLEY ET AL 3,120,285

STABILIZED DRILL BIT

Filed Feb. 1, 1961

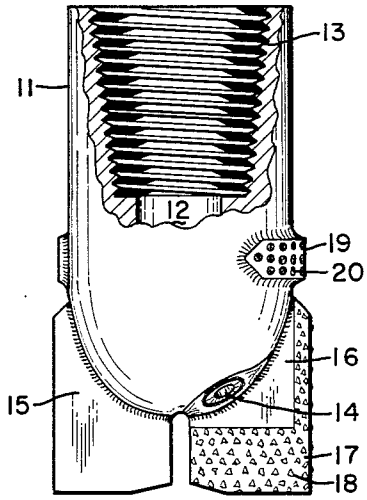

FIG. 1

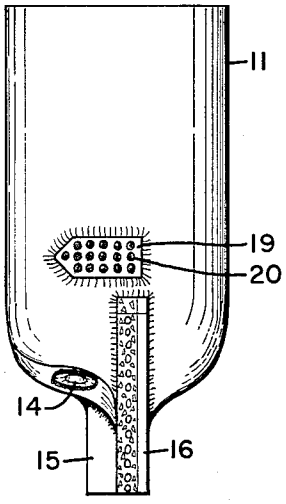

FIG. 2

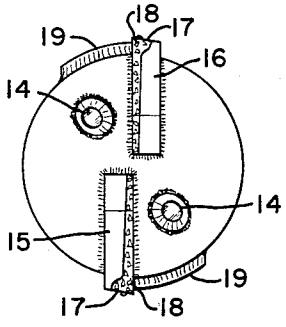

FIG. 3

David S. Rowley
Harold C. Bridwell *INVENTORS*

BY James E. Reed

ATTORNEY

United States Patent Office

3,120,285

Patented Feb. 4, 1964

3,120,285

STABILIZED DRILL BIT

David S. Rowley and Harold C. Bridwell, Tulsa, Okla., assignors to Jersey Production Research Company, a corporation of Delaware

Filed Feb. 1, 1961, Ser. No. 86,557

3 Claims. (Cl. 175—408)

The present invention relates to bits useful for drilling oil wells, gas wells and similar boreholes in the earth and more particularly relates to improved rotary drill bits which have greater stability and longer drilling life than bits available in the past. In still greater particularity, the invention relates to bits provided with abrasion-resistant pads above the gage cutting surfaces in order to improve stability and reduce gage wear during rotary drilling operations.

The useful life of rotary bits intended for drilling oil wells, gas wells and similar boreholes in the earth depends to a considerable extent upon the wear which takes place at the gage cutting surfaces on such bits. Experience has shown that differences in the rate at which the cutting elements penetrate, variations in the hardness of the formation, and flexing of the drill string in the borehole all lead to impact of the cutting elements against the borehole wall. This accelerates wear and abrasion of the cutting elements due to friction and often leads to the formation of fractures at the gage edges. Since the gage surfaces determine the diameter of the hole drilled, the amount of gage wear that can be tolerated is small. A very slight reduction in hole diameter during the life of a bit will generally necessitate reaming the hole before a second bit can be used and in some cases may cause the drill string to become stuck in the hole. To avoid these difficulties, rotary bits are generally discarded at the first sign of serious gage wear, even though they may otherwise still be in good condition. Gage wear thus shortens the useful life of rotary drill bits and increases the cost of drilling operations in which such bits are used.

The present invention provides a new and improved means for reducing wear of the gage surfaces of rotary bits and thus extending their useful drilling life. In accordance with the invention, it has now been found that abrasion-resistant pads can be mounted on the body of a rotary bit above and in advance of the gage cutting surfaces in order to contact the borehole wall before the gage surfaces are subjected to high impact loadings as a result of erratic bit motion. This minimizes wear of the gage surfaces and thus permits a significant improvement in over-all rotary bit drilling life.

The shock resistant pads utilized on the bits of the invention, in addition to reducing gage surface wear, also serve to stabilize the bits in the borehole. The large contact area provided by the pads decreases the tendency of the bits to wobble or nutate in response to forces which would otherwise cause erratic motion. This minimizes the tendency of the bits to drill oversize boreholes, reduces wear and impact on the cutting elements at the bottom of the bits, and lowers friction between the drill collars, drill pipe and other drill string components and the borehole wall.

The pads have a further advantage in that they provide a means for readily determining when a bit should be replaced because of excessive wear of the gage surfaces. During normal drilling operations, the pads do not reduce the drilling rate or increase significantly the torque required to rotate the drill string. When the gage cutting surfaces of the bit fail, however, the pads act as cutting elements to prevent a significant reduction in hole diameter. The torque required for drilling increases and the drilling rate decreases. Such an increased torque requirement or reduced drilling rate can be readily detected at the surface.

The pads utilized in accordance with the invention are arcuate members extending laterally from the bit body above the gage cutting surfaces of the bit. The outer surface of each pad is slightly recessed with respect to the corresponding gage surface in order to permit clearance of the pad during periods of normal bit rotation and yet provide for contact between the pad and the borehole wall as the bit nutates. The pad clearance is normally from about 1/64 to about 1/8 of an inch, depending upon the diameter of the bit. The use of pads which extend laterally to within about 1/32 of an inch of the outer limit of the gage surfaces is generally preferred. Each pad normally extends from about 15 to about 45 degrees, preferably about 30 degrees, around the bit from the corresponding gage surface in the direction of bit rotation. The angle through which each pad extends will depend in part upon the number of cutting elements on the bit. A shorter pad can generally be used on bits provided with three or more cutting elements than can be employed on bits having only two cutting elements. The pads may be bonded to the outer surface of the bit body or may instead be formed integrally therewith.

Each of the pads of the invention is provided with an abrasion-resistant outer surface of tungsten carbide or similar material having a Rockwell hardness in excess of about 85 on the A scale. Materials other than tungsten carbide which may be employed include boron carbide, chromium carbide, titanium carbide, tantalum carbide, silicon carbide, niobium carbide, vanadium carbide, molybdenum carbide, zirconium carbide, and alloys containing such carbides. The corresponding abrasion-resistant borides may also be used. Tungsten carbide is generally preferred because it is somewhat less expensive than the other abrasion-resistant materials. The tungsten carbide or like material may be utilized in the form of inserts mounted in the outer surface of the pad or may instead be applied over the entire outer surface of each pad by conventional welding techniques. It is normally preferred, where abrasion-resistant inserts are used, that each pad be provided with at least one square inch of hard metal surface. The pads may include waterways to facilitate the flow of drilling mud and cutting past them.

The exact nature and objects of the invention can best be understood by referring to the following detailed description of a rotary bit provided with shock resistant pads to improve stability and reduce gage wear and to the accompanying drawings, in which:

FIGURE 1 is a vertical elevation, partially in section, of a rotary drag bit provided with the shock resistant pads of the invention;

FIGURE 2 is a vertical elevation of the bit depicted in FIGURE 1 rotated through an angle of 90 degrees; and

FIGURE 3 is a bottom view of the bit depicted in FIGURES 1 and 2.

Turning now to FIGURE 1 which represents a rotary drag bit provided with shock resistant pads in accordance with the invention, reference numeral 11 designates a hollow steel drag bit body provided with an internal chamber 12 into which drilling fluid may pass downwardly from the drill string used to rotate the bit during drilling. Internal threads 13 in the upper part of chamber 12 form a standard API tool joint box by means of which the bit may be connected to the drill string. Nozzles 14, only one of which is shown in FIGURE 1, are provided in the lower surface of the bit body in order to permit the discharge of drilling fluid from chamber 12 into the space at the bottom of the borehole beneath the bit. The nozzles will normally be lined with tungsten carbide or a similar abrasion-resistant material in order to reduce ero-

sion by the drilling fluid. Steel blades 15 and 16 are welded to the bottom and sides of the bit body in spaced relationship to the nozzles and extend downwardly below the body. The bottom of each blade is initially tapered from an intermediate point upwardly toward the inner edge of the blade in order to center the bit in the borehole during the initial stages of a drilling operation.

The blades of the drag bit shown in FIGURE 1 of the drawing are provided with a matrix 17 containing chips or particles 18 of tungsten carbide or a similar abrasion-resistant material having a Rockwell A hardness in excess of about 85. The matrix is bonded to the steel blade on the face and gage edge. The chips or particles distributed throughout the matrix penetrate the formation during drilling. As the matrix wears away, new particles are continually exposed. The chips or particles are preferably sintered tungsten carbide but other hard, abrasion-resistant alloys may be employed. Suitable materials include boron carbide, silicon carbide, tantalum carbide, titanium carbide, diamond chips and the like. The particle size will normally range between about 0.045 inch and about 0.250 inch along the major axis.

The martix employed to bond the chips or particles 18 to the steel blades is composed of one or more metals which melt below about 2,500° F. and have the property of wetting both the steel and the carbide or other particles. Suitable matrix materials include copper, copper-nickel alloys containing up to about 60 percent nickel, copper-beryllium alloys containing up to about 3 percent beryllium, copper-cadmium alloys containing up to about 18 percent cadmium, and the like. A preferred matrix composition consists of a cupronickel alloy containing about 75 percent copper and about 25 percent nickel containing a mixture of powdered tungsten carbide and nickel in order to increase the strength and abrasion resistance of the matrix. Blades containing a matrix on the face and gage edge may be fabricated by a casting or infiltration technique wherein the steel blade, the carbide particles, and the mixed carbide-nickel powder are placed in a mold and the molten matrix metal is poured in about the blade and particles to effect the necessary bond.

In lieu of a matrix containing particles of tungsten carbide or a similar material, the drag bit blades may be provided with inserts of tungsten carbide which are brazed to the face of the blade or embedded in the blade as finger inserts. The blades may also be surfaced with tungsten carbide by utilizing Tube Borium or a similar tungsten carbide welding material and conventional welding equipment.

Abrasion-resistant pads 19 are mounted on the body of the bit shown in FIGURE 1 of the drawing above blades 15 and 16. As shown more clearly in FIGURES 2 and 3, each pad extends from a point above the gage edge around the bit body through an angle of about 30 degrees in the direction of rotation. The pads are recessed about 1/32 of an inch with respect to the gage edges of the blades in order to permit them to clear the borehole wall as the bit rotates about its longitudinal axis. The pads may be machined from steel and welded to the body of the bit as shown in FIGURES 1 through 3 or may instead be cast as an integral part of the bit body. Tungsten carbide inserts 20 are pressed into holes drilled into each pad in order to provide an abrasion-resistant outer surface. A plurality of inserts are employed in order to give a total hard metal area of about 1.5 square inches for each pad. In lieu of or in addition to such inserts, the entire pad may be surfaced with tungsten carbide weld material to provide abrasion resistance.

In utilizing the rotary drill bit shown in FIGURES 1 through 3 of the drawing, a conventional drill string and surface equipment are employed. The bit is lowered into the borehole at the end of the drill string and rotated from the surface. During normal drilling, the bit rotates smoothly and hence impact loadings on the gage edges are low. When one of the blades tends to cut more deeply into the formation than the other, however, due to variations in hardness across the bottom of the borehole for example, the bit will tend to pivot about that blade. This leads to impact between the bit and the borehole wall. The impact loading is taken by the pad above and in front of the opposite blade, so that the gage edge of the blade does not contact the wall. Blade wear on the gage surface is therefore reduced. The pads limit erratic motion of the bit, cause it to run more smoothly than it otherwise would, and reduce its tendency to drill oversize holes. This further reduces gage wear. Contact between the blades and the bottom of the borehole is more uniform because of the stabilizing effect of the pads and hence the life of the bottom cutting elements is improved. The more stable bit action tends to reduce contact between the drill string and the borehole wall and thus improves the life of the drill collars, drill pipe and other drill string componnents.

The pads utilized in accordance with the invention markedly increase the useful life of drag bit blades but do not entirely eliminate gage wear. Over a prolonged period of time the gage edges of the blades will wear down to a diameter less than that of the pads mounted above the blades. The pads will then engage the wall of the borehole to prevent further reductions in hole diameter. This reduces the danger that the drill string will become stuck in the borehole. The increased torque required for the pads to cut away the formation and the accompanying reduction in drilling rate can readily be detected by the driller. This provides a convenient indication that the bit should be withdrawn from the hole and replaced.

It will be understood that many modifications in the specific bits described above and depicted in the drawing may be made without departing from the inventive concept. Shock resistant pads of the type disclosed herein may be mounted adjacent the gage cutting surfaces of rotary drill bits of a variety of different designs in order to improve the stability of such bits and reduce the rate at which the gage cutting edges wear. Materials other than tungsten carbide may be utilized to increase the abrasion resistance of the pads. A variety of pad configurations may be employed. These and similar modifications will readily suggest themselves to those skilled in the art.

What is claimed is:

1. A rotary drag bit comprising:

a hollow body member provided with means near the upper end thereof for connecting said member to the lower end of a rotary drill string and with nozzles for discharging fluid beneath said member;

a plurality of blades attached to and depending from said body member, each of said blades including an inner edge extending downwardly below said body member from a point near the longitudinal axis of said member and a gage edge which projects laterally beyond said body member and extends essentially parallel to said longitudinal axis from a point intermediate the upper and lower ends of said body member to a lower gage corner at the bottom of said blade, said gage edge being surfaced at least in part with an abrasion resistant material having a Rockwell A hardness in excess of about 85;

and a plurality of abrasion-resistant pads mounted on said body member near the upper ends of said blades, the outer surface of each pad extending about said body member from a point adjacent the gage edge of a blade to a point in advance of said blade, each pad being surfaced at least in part with an abrasion-resistant material having a Rockwell A hardness in excess of about 85, and the radial distance from the longitudinal axis of said body member to the outer surface of each pad being from about 1/64 to about 1/8 inch less than the radial distance from said longitudinal axis to the gage edge of each blade.

2. A bit as defined by claim 1 wherein each of said pads extends about said body to a point from about 15° to about 45° in advance of a blade.

3. A bit as defined by claim 1 wherein said pads are surfaced with inserts of tungsten carbide.

References Cited in the file of this patent

UNITED STATES PATENTS

1,039,909	Decker	Oct. 1, 1912
1,600,073	Smith	Sept. 14, 1926
1,805,899	Wright	May 19, 1931
2,097,040	Pivoto	Oct. 26, 1937
2,290,595	Kinnear	July 21, 1942
2,562,346	Whittaker	July 31, 1951
2,579,720	Atkinson	Dec. 25, 1951
2,657,907	Cochran et al.	Nov. 3, 1953
2,696,973	Baumgartner	Dec. 14, 1954
2,708,104	McAllister	May 10, 1955
2,942,501	Kallio	June 28, 1960