Feb. 6, 1973 R. W. MANIFOLD 3,715,183

GAS BURNER ESPECIALLY USEFUL FOR GLAZING GLASSWARE

Filed June 15, 1971 2 Sheets-Sheet 1

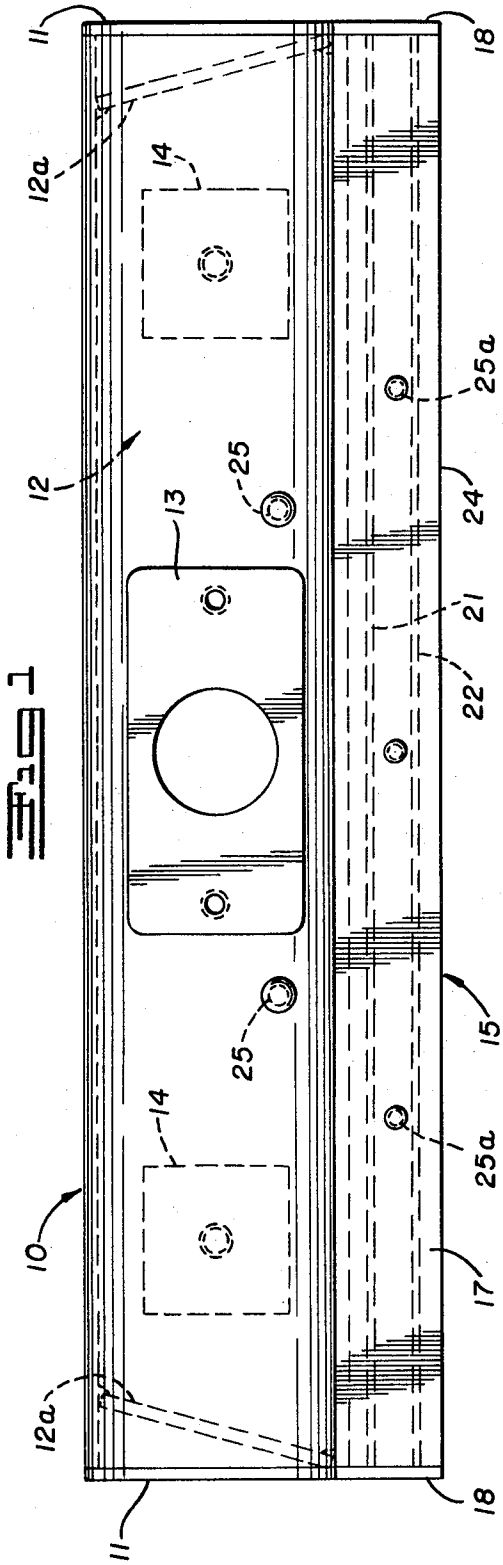

Fig. 1

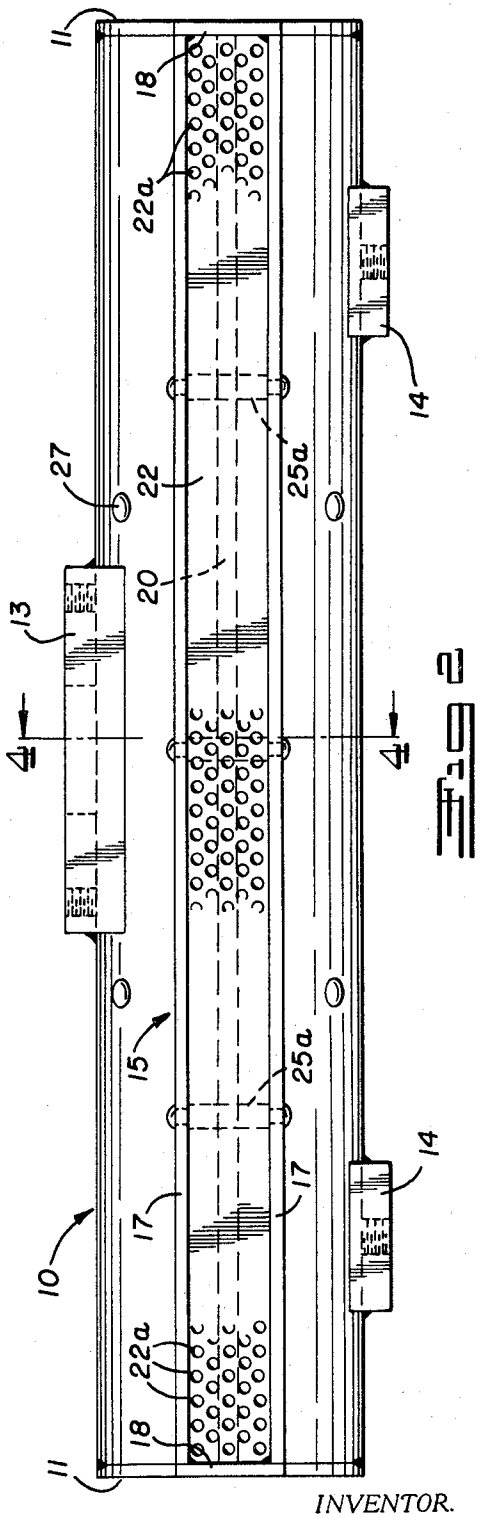

Fig. 2

INVENTOR.
RICHARD W. MANIFOLD

BY
MAHONEY, MILLER & STEBENS
BY
ATTORNEYS

Feb. 6, 1973 R. W. MANIFOLD 3,715,183

GAS BURNER ESPECIALLY USEFUL FOR GLAZING GLASSWARE

Filed June 15, 1971 2 Sheets-Sheet 2

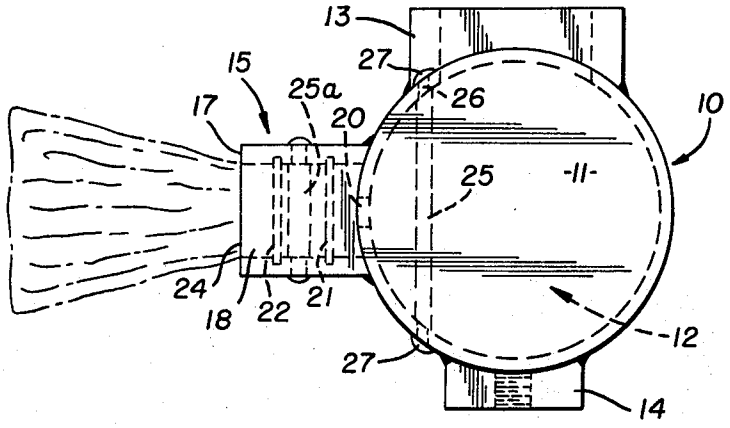

Fig 3

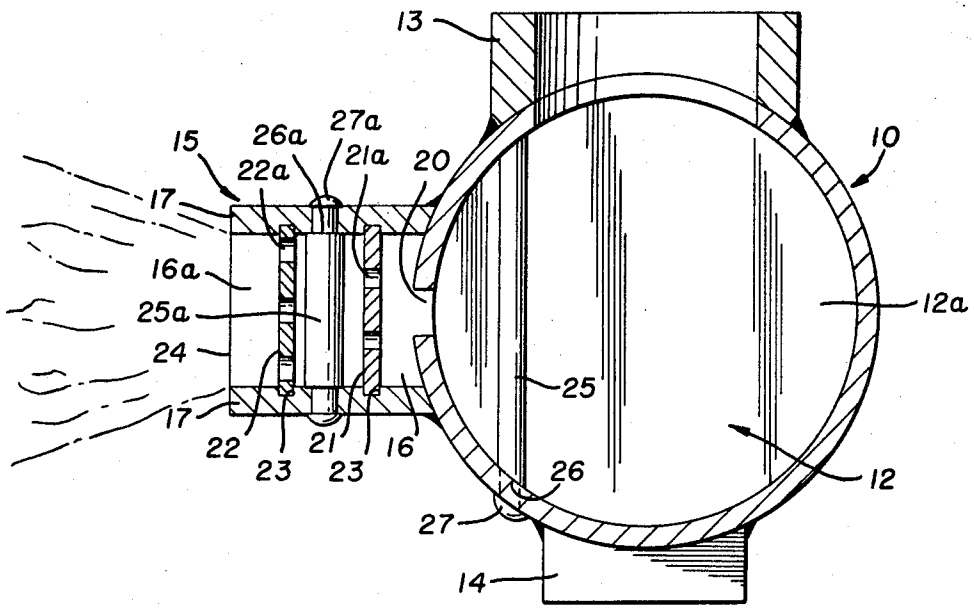

Fig 4

INVENTOR.
RICHARD W. MANIFOLD

BY
MAHONEY, MILLER & STEBENS
BY Wm. V. Miller
ATTORNEYS

United States Patent Office 3,715,183 Patented Feb. 6, 1973

3,715,183

GAS BURNER ESPECIALLY USEFUL FOR GLAZING GLASSWARE

Richard W. Manifold, Reynoldsburg, Ohio, assignor to Manifold & Phalor Machine Co., Reynoldsburg, Ohio

Filed June 15, 1971, Ser. No. 153,283
Int. Cl. F23d 13/12
U.S. Cl. 431—328 5 Claims

ABSTRACT OF THE DISCLOSURE

A gas burner for producing a type of flame especially useful in the glazing of glassware. It comprises an elongated distribution chamber having a narrow inlet slot in its rear wall and forwardly spaced perforated baffle plates so arranged as to break up the gas introduced through the inlet slot under high pressure to prevent it from blowing out from the chamber excessively and so that a wide surface, uniform temperature flame is produced which is especially suitable for the glazing of glassware.

Most burner arrangements are provided with single circular apertures or rows thereof to produce points or ribbons of flames. Such flames are usually hot at their outer envelopes or shells but are relatively cold at their interiors. The points or ribbons of flames are not suitable for glazing glassware which requires large areas or blankets of flame of uniformly high temperature. The present invention provides a burner structure in which the gas can be supplied under unusually high pressure, will be broken up to prevent it from just blowing out of the burner chamber, and will be formed into a blanket of flame of uniformly high temperature which can envelope the glassware and effectively glaze it.

The best mode contemplated in carrying out my invention is illustrated in the accompanying drawings in which:

FIG. 1 is a plan view of the burner.

FIG. 2 is a front elevational view of the burner.

FIG. 3 is an end elevational view of the burner.

FIG. 4 is an enlarged transverse sectional view through the burner taken along line 4—4 of FIG. 2.

With reference to the drawings, as an example of my invention, I show a burner which comprises a main casing **10** of cylindrical form. This casing **10** may be formed from a pipe length of circular cross-section which has its opposed ends closed by cap discs **11** which may be welded in place. This main casing provides a main supply chamber **12** which receives the gas mixture from a suitable source connected to an inlet fitting **13** at the top of the casing **10** midway of the length thereof. The bottom of the casing on its exterior may carry mounting plates **14** adjacent its ends which may be used in mounting the burner on a glass glazing or other machine.

Projecting radially forwardly at the front of the main casing **10** is an elongated rectangular extension **15**. This extension provides a gas mixture distributing chamber **16** extending the full length of the burner. It includes the vertically spaced upper and lower horizontal walls **17** which are disposed in parallel relationship and extend forwardly from the casing **10**. These walls may be formed of strips of metal having their rear edges welded to the casing. The spaces at the ends of the walls **17** are closed by small plates **18** which may be welded thereto, thus completing the rectangular extension.

To provide for passage of the gas mixture from the supply chamber **12** to the distributor chamber **16**, an inlet slot **20** is provided in the forward side of the casing **10** and extends the full length thereof. This inlet slot **20** is relatively narrow and may be formed by slitting the casing **10**. It is located midway between the upper and lower

walls **17** of the extension **15**. It is of much less width or height than the space or chamber **16** between these walls.

As previously indicated, within the chamber **16** are baffles which break up the gas supplied to the chamber **16** through the slot **20** and prevent it from merely blowing out from the chamber. These baffles are shown as being two in number and comprise a rear baffle **21** and a forward baffle **22**. These baffles **21** and **22** are in the form of perforated plates with the perforations throughout the areas of the respective plates. The respective plates **21** and **22** are positioned in elongated retaining slots **23** formed in the walls of the chamber **16**. The location of the plates **21** and **22** is critical. It will be noted that the plate **21** is located forwardly of the inlet slot **20** and the plate **22** is spaced forwardly of the plate **21**. However, it will be further noted that the plate **22** is spaced behind the outer lip or edge **24** of the extension **15**. This provides an extension **16***a* of the chamber **16** beyond the plate **22** which will serve to form and hold the blanket of flame.

The inner screen **21** preferably has smaller openings than the outer screen **22**. Also, it is preferred that the openings **21***a* of the inner screen be out of alignment with the openings **22***a* of the outer screen. The result of this arrangement is that higher pressure gas can be used without blowing out of the chamber **16** and its extension **16***a*.

As previously indicated, the width of the inlet slot **20** is critical and to maintain this width accurately under expansion and contraction of the casing **10**, spacer pin units **25** are provided within the casing and extending across the slot **20**. These spacers are provided with inner shoulders **26** for engaging the casing wall inner surface and outer battered ends **27** for engaging the outer surface of the casing. Similar spacer pin units **25***a* are provided within the extension **15** at longitudinally spaced intervals and provided with shoulders **26***a* for engaging the inner surfaces of the respective walls **17** and battered ends **27***a* for engaging the outer surfaces of the walls **17**. These latter spacers **25***a* also aid in maintaining the width of the slot **20** as well as preventing spreading of the walls **17** of the extension **15** which might permit displacement of the perforated baffle plates **21** and **22**.

The air and gas mixture introduced under high pressure from a suitable source into the chamber **12** will pass outwardly through the slot **20** into the chamber **16**. As it passes from the chamber **12** into the chamber **16** through the slot **20**, it will expand and will first engage the baffle plate **21** which will serve to break up the stream and uniformly distribute it as it passes on through the openings **21***a* thereof. The mixture will next engage the baffle plate **22** which will serve to effectively break up the stream since the openings **22***a* thereof are out of alignment with the openings **21***a* of the plate **21**. The mixture will pass into the chamber extension **16***a* where the blanket of flame will be formed, as indicated diagrammatically in FIG. 3. This type of blanket flame will be especially suitable for glazing glassware.

In order to prevent pockets of gas at the end of the casing **10**, it is preferred that baffle discs **12***a* be disposed within those ends and be directed forwardly and outwardly toward the slot **20**.

Thus, the arrangement described will result in the control of the gas flow and the distribution of it to attain the desired even temperature surface flame, the surface being very extensive as compared to the usual pointed or tipped flame.

It will be apparent that I have provided a novel burner structure which is simple and can be manufactured at a low cost. However, it will be very effective in using a gas mixture under high pressure and in producing a blanket

type flame suitable for glazing glassware or other analogous operations.

Having thus described my invention, what is claimed is:

1. A gas burner comprising a casing providing a gas supply chamber therewithin, an elongated distributor chamber connected to the casing by an inlet disposed along the distributor chamber, and spaced perforated baffle plates located within said distributor chamber outwardly of said inlet, said inlet being a longitudinal slot, and at least two of the baffle plates being provided and including an inner plate spaced outwardly of the inlet slot, and an outer plate spaced outwardly of the inner plate, said distributor chamber having an outer lip and the outer plate being spaced inwardly thereof to provide a flame-forming chamber beyond the outer plate, said casing being of annular tubular form and the inlet slot being in the wall thereof and extending longitudinally thereof, a radial extension on said casing and extending longitudinally thereof in which said distributor chamber is provided, said extension having spaced walls connected to the casing spaced from and parallel to said slot, said outer lip being at the outer edges of said walls.

2. A gas burner according to claim 1 including spacers secured within the casing at longitudinally spaced positions and connected to the walls of the casing to maintain the width of said slot.

3. A gas burner according to claim 2 including spacers secured within the extension to said spaced walls to maintain the spacing thereof.

4. A burner according to claim 3 including angularly disposed baffle plates in the end of the gas supply chamber within the casing for directing the gas from the end of the supply chamber towards said slot inlet.

5. A gas burner according to claim 1 in which the respective perforated plates have openings of different sizes and out of alignment.

References Cited

UNITED STATES PATENTS

3,445,175	5/1969	Krieger	431—328
1,078,726	11/1913	Fisher	431—328 X
3,526,367	9/1970	Trihey	239—556

FOREIGN PATENTS

738,534	10/1955	Great Britain	239—553.3

CARROLL B. DORITY, JR., Primary Examiner

U.S. Cl. X.R.

431—350; 239—553.3, 557