(12) INTERNATIONAL APPLICATION PUBLISHED UNDER THE PATENT COOPERATION TREATY (PCT)

(19) World Intellectual Property Organization
International Bureau

(43) International Publication Date
27 October 2016 (27.10.2016)

WIPO | PCT

(10) International Publication Number
WO 2016/170159 A1

(51) International Patent Classification:
A63F 3/00 (2006.01) *A63F 1/00* (2006.01)
A63F 3/04 (2006.01)

(21) International Application Number:
PCT/EP2016/059085

(22) International Filing Date:
22 April 2016 (22.04.2016)

(25) Filing Language: English

(26) Publication Language: English

(30) Priority Data:
BE2015/5270 23 April 2015 (23.04.2015) BE

(71) Applicant: **MEMORY GAMES BVBA** [BE/BE]; Liersesteenweg 107, 2220 Heist-op-den-Berg (BE).

(72) Inventor: **MORTELMANS, Rosa**; Generala Wladyslawa Sikorskiego 28, 55-300 Sroda Slaska (PL).

(74) Agent: **BRANTSANDPATENTS BVBA**; Pauline Van Pottelsberghelaan 24, 9051 Ghent (BE).

(81) Designated States *(unless otherwise indicated, for every kind of national protection available)*: AE, AG, AL, AM, AO, AT, AU, AZ, BA, BB, BG, BH, BN, BR, BW, BY, BZ, CA, CH, CL, CN, CO, CR, CU, CZ, DE, DK, DM, DO, DZ, EC, EE, EG, ES, FI, GB, GD, GE, GH, GM, GT, HN, HR, HU, ID, IL, IN, IR, IS, JP, KE, KG, KN, KP, KR, KZ, LA, LC, LK, LR, LS, LU, LY, MA, MD, ME, MG, MK, MN, MW, MX, MY, MZ, NA, NG, NI, NO, NZ, OM, PA, PE, PG, PH, PL, PT, QA, RO, RS, RU, RW, SA, SC, SD, SE, SG, SK, SL, SM, ST, SV, SY, TH, TJ, TM, TN, TR, TT, TZ, UA, UG, US, UZ, VC, VN, ZA, ZM, ZW.

(84) Designated States *(unless otherwise indicated, for every kind of regional protection available)*: ARIPO (BW, GH, GM, KE, LR, LS, MW, MZ, NA, RW, SD, SL, ST, SZ, TZ, UG, ZM, ZW), Eurasian (AM, AZ, BY, KG, KZ, RU, TJ, TM), European (AL, AT, BE, BG, CH, CY, CZ, DE, DK, EE, ES, FI, FR, GB, GR, HR, HU, IE, IS, IT, LT, LU, LV, MC, MK, MT, NL, NO, PL, PT, RO, RS, SE, SI, SK, SM, TR), OAPI (BF, BJ, CF, CG, CI, CM, GA, GN, GQ, GW, KM, ML, MR, NE, SN, TD, TG).

Declarations under Rule 4.17:

— *of inventorship (Rule 4.17(iv))*

Published:

— *with international search report (Art. 21(3))*

WO 2016/170159 A1

(54) Title: SUDOKU BOARD FACILITATING PICKING UP OF THE TILES, SUDOKU KIT AND METHOD FOR PRODUCING THE SUDOKU BOARD

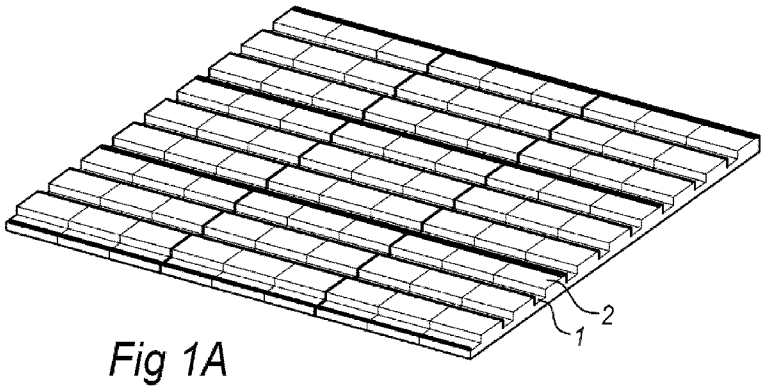

Fig 1A

(57) Abstract: The current invention concerns an Sudoku gameboard and a method for prodcuing one. Said gameboard is a sheet comprising a top side which is provided with a plurality of elongate, parallel and equidistant grooves extending at least partially across said top side, said grooves having a predetermined depth and a width to allow tilting of the Sudoku tiles by pressing near the edge of one. The simple relief in the form a groove allows the gameboard to be manufactured easily and speedily. Lastly, it comprises a kit for playing Sudoku, comprising a gameboard and suitable Sudoku tiles.

SUDOKU BOARD FACILITATING PICKING UP OF THE TILES , SUDOKU KIT AND METHOD FOR PRODUCING THE SUDOKU BOARD

Technical field

The invention pertains to the technical field of gameboards, specifically for playing Sudoku (in a variety of forms, such as Symboku, irregularly shaped Sudokus, Sudokus that use a larger or smaller range of numbers (mini or maxi Sudoku), Futoshikis, binary puzzles, Kakuros and others). More specifically, the proposed invention allows for an easier placement and more in particular, an easier picking up of the game tiles.

Background

There remains a need in the art for an improved gameboard for playing Sudoku, especially for picking up placed tiles without disrupting the rest of the tiles in play, while still being easy and cheap to produce.

The document US 2007/284815 discloses a possible Sudoku board, which however does not allow for an easy tilting of the placed tiles. Instead, the proposed gameboard intends to provide an erasable writing surface whereby the cells of the Sudoku grid are separated from each other by recesses. The purpose of this document as opposed to US 2007/284815 is also to provide a gameboard which allows tilting of tiles that are placed on the board. Not only does the US application not use tiles, it also does not allow for an easy way to remove said tiles, and as such is of no relevance.

The document US 1462471 is directed to device for holding cards, and does not relate to puzzle games with tiles as is the case in the invention proposed here. Furthermore, it does not allow for an easy way to pick up placed tiles (amongst others as there is no indication of tiles being used) and also is not easily produced.

The document DE 20 2007 003486 U1 describes a gameboard for Sudoku wherein magnets are provided in the cells of the Sudoku grid to hold placed tiles. Again, no steps are made to allow an easy tilting, and furthermore, the proposed invention is not easy to manufacture nor does it even intend to provide an easy to manufacture product.

The document JP 2012/100739 discloses a possible Sudoku board as part of a bigger set. While it shows an embodiment wherein a tile can be tilted through a seesaw configuration wherein the tile is at one end pushed down, while it rests on an elevated ridge. However, as can be construed from the drawings, while the board shows the base principle of tilting tiles in such a way, it is exceedingly hard to manufacture the proposed board due to all of the different recesses and elevations, running in both X and Y

directions across the plane of the board. This will disallow a myriad of manufacturing techniques (for instance extrusion is practically impossible) and complicate many other techniques. For instance, it is practically impossible to simply add the separate elevated ridges piecewise, this can only be performed in one piece for the entire gameboard, or in a very time-consuming process of placing long elevated ridges separately and subsequently placing interconnecting ridges in the perpendicular direction. This not only inconveniences the production greatly thus making the product more expensive by the sheer increase in work hours, it also requires more materials, even further increasing the cost. Lastly, the manufacturing process can no longer be performed by simple machinery and will need very accurate and expensive systems with precise positioning means and delicate manipulation tools to place the components. Alternatively, a milling unit can be used to remove material instead of attaching the elevated patterns. Again, this will require a more complex setup of machinery as there is a two dimensional pattern that needs to be provided to the gameboard. Also, as the playing cells are all recessed, the player will need good coordination in order to place the playing tile in the recess, which can be especially hard for elderly players.

The applicant solves the aforementioned problems by providing a very straightforward gameboard which can be manufactured with optimal efficiency, speed and at low costs and without the need for expensive machinery. Furthermore, special additions are introduced for improved positioning possibilities.

The present invention aims to resolve at least some of the problems mentioned above.

Summary of the invention

In a first aspect, the present invention provides an improved gameboard for playing Sudoku by placing and removing Sudoku tiles on and from said gameboard. The gameboard is a substantially planar, preferably square or rectangular, sheet, comprising a top side which is provided with a plurality of elongate, parallel and equidistantially placed grooves extending at least partially across said top side. The grooves have a predetermined depth and width arranged to allow tilting of the Sudoku tiles, preferably up to a minimal tilting angle between the gameboard and the tilted tile of at least 10°. More preferably said minimal tilting angle is at least 30°.

In a preferred embodiment the top side of the gameboard is provided with visually discernible markings indicating a grid of cells for placing a Sudoku tile on. Said markings comprise a first set of parallel equidistant lines and a second set of parallel equidistant lines, which second set of lines is perpendicular to the first set of lines. The lines of the first set extend along a first lateral edge of the grooves.

In a preferred embodiment the grooves have a second lateral edge opposite to the first lateral edge, which second edge is beveled or chamfered. Preferably whereby said beveled or chamfered edge is angled with the plane of the gameboard between 30° and 70°.

In a preferred embodiment, each of the cells of the grid comprises a magnet or a magnetizable element. Said magnet or magnetizable element is located underneath the surface of the top side of the gameboard or at the surface of the top side of the gameboard, but not underneath or at the grooves. Preferably said magnets or magnetizable elements are positioned centrally in the ungrooved part of each cell, referring to the part of the cell not comprising the groove. More preferably, the magnets or magnetizable elements are specifically shaped to attract a second, similarly shaped magnet or magnetizable element when brought in proximity of each other in a specific relative orientation to the magnet or magnetizable element in the gameboard. Preferred shapes are square, rectangular, triangular or polygonal.

In a second aspect, the invention provides in a number of efficient, fast and cheap methods of manufacturing a gameboard for playing Sudoku, preferably a gameboard as described in this document.

In a first embodiment, said method comprises following steps:

a. providing a flat sheet, preferably with a rectangular top surface, more preferably with a square top surface;
b. attaching a plurality, preferably 7, 8 or 9, of elongate slats to said flat sheet equidistantially and parallel with respect to the other slats, thereby creating parallel equidistant grooves, whereby said slats have a predetermined width and a predetermined distance from each other to allow tilting of Sudoku tiles;
c. applying two sets of visually discernible markings on the top side of the gameboard, whereby the first set of markings is applied on and along a first lateral edge of the slats, whereby the second set of markings is equidistantially applied perpendicular to said first set of markings and whereby said markings indicate a grid suitable for playing Sudoku by placing Sudoku tiles thereon.

In a second embodiment, said method comprises following steps:

a. providing a flat sheet, preferably with a minimal thickness of 5 mm, more preferably of 1 cm, and a rectangular or square top surface;
b. milling a plurality, preferably 7, 8 or 9, of elongate, parallel and equidistant grooves extending at least partially, preferably entirely, across the top side of

said flat sheet, said grooves having a predetermined depth and a width to allow tilting of Sudoku tiles;

c. applying two sets of visually discernible markings on the top side of the gameboard, whereby the first set of markings is applied along a first lateral edge of the grooves, whereby the second set of markings is equidistantially applied perpendicular to said first set of markings and whereby said markings indicate a grid suitable for playing Sudoku by placing Sudoku tiles thereon.

In a third embodiment, said method comprises following steps:

a. providing a flat sheet, preferably with a minimal thickness of 5 mm, more preferably of 1 cm, and a rectangular or square top surface;
b. extruding said flat sheet through an extrusion profile comprising a top side and a substantially flat bottom side, whereby the top side of said profile comprises a plurality, preferably 7, 8 or 9, of equidistantially placed recesses for extruding a plurality of grooves into the milled sheet;
c. applying two sets of visually discernible markings on the top side of the gameboard, whereby the first set of markings is applied along a first lateral edge of the grooves, whereby the second set of markings is equidistantially applied perpendicular to said first set of markings and whereby said markings indicate a grid suitable for playing Sudoku by placing Sudoku tiles thereon.

Preferably in all of the methods, the grooves (or slats) have a second lateral edge which is chamfered or beveled, which allows for an easier tilting of the Sudoku tiles.

In a third aspect, the method provides in a kit for playing Sudoku, comprising a gameboard as described in this document and a plurality of Sudoku tiles shaped for playing Sudoku on said gameboard. The Sudoku tiles are adapted to allow tilting to at least a predetermined tilting angle when partially pushed into the grooves of the gameboard, preferably whereby said tilting angle is at least 10°, more preferably at least 30°.

In a further improved embodiment, the gameboard comprises magnets or magnetizable elements in each cell as described in this document, and the Sudoku tiles are provided with matching magnets or magnetizable magnets, removably affixing and correctly positioning (rotationally) the Sudoku tiles on or in a desired cell of the grid when brought into proximity of the magnets of magnetizable element of the gameboard.

Description of figures

FIG. 1A-B-C show an isometric view (FIG. 1A), a top view (FIG. 1B) and a lateral view (FIG. 1C) of an embodiment of the gameboard of the invention.

FIG. 2A-B show a lateral view of the gameboard with magnets or magnetizable elements on the surface (FIG. 2A) of the cells of the Sudoku grid or underneath (FIG. 2B) of said surface.

FIG. 3A-B show a lateral view of the gameboard and an isometric view of the gameboard with raised lines of the first set, thereby separating the rows of cells.

FIG. 4A-B show sides of a Sudoku tile, possibly top and back side of a single tile or top sides of separate tiles.

FIG. 5A-B show a non-tilted (left) and tilted (right) Sudoku tile, respectively on a gameboard according to FIG. 2A-B and a gameboard according to FIG. 1A-B-C.

FIG. 5C-D show a Sudoku tile that is placed on a cell (FIG. 5C) and a lifted Sudoku tile on a cell (FIG. 5D).

FIG. 6A-B-C show a possible construction of Sudoku tile and gameboard with a magnet or magnetizable element specifically shaped to optimize positioning of the Sudoku tile.

Detailed description of the invention

The present invention concerns an improved gameboard and kit for playing Sudoku and methods for manufacturing said gameboard.

Unless otherwise defined, all terms used in disclosing the invention, including technical and scientific terms, have the meaning as commonly understood by one of ordinary skill in the art to which this invention belongs. By means of further guidance, term definitions are included to better appreciate the teaching of the present invention.

As used herein, the following terms have the following meanings:

"A", "an", and "the" as used herein refers to both singular and plural referents unless the context clearly dictates otherwise. By way of example, "a compartment" refers to one or more than one compartment.

"About" as used herein referring to a measurable value such as a parameter, an amount, a temporal duration, and the like, is meant to encompass variations of +/-20% or less, preferably +/-10% or less, more preferably +/-5% or less, even more preferably +/-1% or less, and still more preferably +/-0.1% or less of and from the specified value,

in so far such variations are appropriate to perform in the disclosed invention. However, it is to be understood that the value to which the modifier "about" refers is itself also specifically disclosed.

"Comprise", "comprising", and "comprises" and "comprised of" as used herein are synonymous with "include", "including", "includes" or "contain", "containing", "contains" and are inclusive or open-ended terms that specifies the presence of what follows e.g. component and do not exclude or preclude the presence of additional, non-recited components, features, element, members, steps, known in the art or disclosed therein.

The recitation of numerical ranges by endpoints includes all numbers and fractions subsumed within that range, as well as the recited endpoints.

It is to be borne in mind that although the invention will often be explained in reference of 'standard' Sudoku puzzles (9x9), it can easily be implemented for other formats (16x16, 25x25, 4x4 or bigger) and other types of such puzzles. These other implementations are therefore to be considered as falling under the scope of protection of the claimed invention.

In a first aspect, the invention provides an improved gameboard for playing Sudoku with Sudoku tiles (by placing and removing these on and off said gameboard). The gameboard is substantially planar, preferably square or rectangular, sheet. Said sheet comprises a top side which is provided with a plurality (preferably 7, 8 or 9) of elongate, parallel (with respect to each other) and equidistant grooves extending (at least partially) across said top side. Said grooves have a predetermined depth and width to allow tilting of the Sudoku tiles, preferably up to a minimal tilting angle of at least 10°, more preferably said minimal tilting angle is at least 30°. The tilting of the Sudoku tiles is executed by pushing part of the tile that is hanging over a groove downward, thereby tipping the opposite end of the tile upwards so it can be easily picked up and removed from the gameboard without disturbing other Sudoku tiles. Said tilting angle can be furthermore also be at least 12°, 14°, 16°, 18°, 20°, 22°, 24°, 26°, 28°, 32°, 34°, 36°, 38°, 40°, 45°, 50°, 60°, 70°, 80°, lower (5°, 6°, 7°, 8°, 9°), higher, or values between the proposed angles.

As mentioned in this document, the main advantage of the proposed board is the ease with which Sudoku tiles that have been placed on the board can be picked up when a mistake was made. Without the possibility of tilting the tiles in order to pick them up, removal of tiles can be hard as it can be difficult to pick up a thin and flat object lying on a flat plane, but also as one can very easily disturb other tiles that are already placed. It is still the intention to provide a compact board so allowing wider empty borders

between tiles is undesirable, both for practical reasons (bigger board can be impractical to transport or to shelve) as well as for the reason that a bigger board could complicate the solving process due to lack of oversight. Therefore, the grooves are introduced which allow a compact board from which tiles can be easily removed even when other tiles are on the gameboard. The concept of a Sudoku board as opposed to the usual writing down of the solution is furthermore useful due to the advantages of a change of perspective, by making the problem solving process more tangible or allowing the player to visualize the problem in other ways.

However, it is also intended that the product can be easily manufactured (fast, cheap, without need for expensive or complex machinery). The gameboard as proposed can be manufactured through several methods which are not available for more complex prior art gameboards. For instance, by simply attaching a number of slats to a flat surface, the grooves can be provided (between the slats) with an extremely limited number of operations and extremely easily obtainable and relatively few building elements. Alternatively, the grooves can be milled into a flat sheet, laser-etched (or other etching techniques), or furthermore the proposed board can be easily extruded as it would have a constant cross-sectional profile. In a further alternative, the design is easy to produce by additive manufacturing (3D printing). Afterwards, markings to delineate the cells of the Sudoku grid can be easily applied to the product. Production costs (both structural as piecewise) are effectively reduced to a minimum by the design of the product.

Furthermore, it is the intention of the applicant of providing a product that can be easily used, as a substantial market segment for the product could be the elderly, who can for instance lack the finer motor skills to fill in Sudoku puzzles in the old fashioned way and furthermore need a gameboard on which the tiles can be easily placed without requiring too much precise coordination and again the necessary finer motor skills.

Lastly, a further advantage of the presented invention is that it provides a great deal of surface visible for the eye on which information can be displayed, and can serve as promotional gifts with commercial information, a company logo or other figures or text. This information can be printed on the actual grid of the gameboard, and/or around said grid on the edges of the gameboard. It is furthermore possible to extend the gameboard somewhat to provide a surface to be used for said information.

In a preferred embodiment of the invention, the top side of the gameboard is provided with visually discernible markings indicating a grid of cells for placing a Sudoku tile on. Said markings comprise a first set of parallel lines and second set of parallel lines perpendicular to said first set of lines. The lines of the first set extend along a first lateral edge of the grooves. This ensures that a groove substantially falls into a single row of

cells of the playing grid, thereby ensuring that a tile that has been placed on the board correctly, will have a single edge region of the tile hanging over said groove thus allowing tilting (as opposed to when a tile would hang over a groove only with a central region and be suspended on two opposite edges).

In a preferred embodiment the grooves have a second lateral edge (opposite to the first lateral edge, both of which extend along the length of the groove), whereby said second lateral edge is beveled or chamfered. Preferably said beveled or chamfered edge is angled with respect to the gameboard itself with an angle comprised between 10° and 70°. Said angle can for instance be at least 12°, 14°, 16°, 18°, 20°, 22°, 24°, 26°, 28°, 30°, 32°, 34°, 36°, 38°, 40°, 42°, 44°, 46°, 48°, 50°, 52°, 54°, 56°, 58°, 60°, 62°, 64°, 66°, 68°, or can be at most 12°, 14°, 16°, 18°, 20°, 22°, 24°, 26°, 28°, 30°, 32°, 34°, 36°, 38°, 40°, 42°, 44°, 46°, 48°, 50°, 52°, 54°, 56°, 58°, 60°, 62°, 64°, 66°, 68°, and possible combinations of the above proposed bounds.

A chamfered or beveled edge allows for an easier and more gradual tilting of a tile, and can ensure the tile to be tilted to a desired tilting angle. Furthermore, in many manufacturing techniques (such as milling), more acute (or right) angles are more difficult to provide than more obtuse angles, making beveled and chamfered edges easier to produce.

In a preferred embodiment, one or more (preferably either all, all but 1 or all but 2) of the lines of the first set are at least partially raised over their substantially entire length with respect to the top side of the gameboard, thereby separating individual rows of the grid. While this does not greatly impede the manufacturing process (at there remains a constant cross-sectional profile), it can however facilitate the placement of the tiles somewhat in one dimension of the plane of the gameboard. The protrusion of the lines of the first set with respect to the surrounding gameboard can be comprised in a range of a few mm, such as 1, 2, 3, 4, 5 mm and values therein between. Furthermore, the width of said protrusion can again fall in the proposed range of a few mm.

In a preferred embodiment, the grooves have a width which is comprised between one fourth and three fourths of a shortest distance between two neighboring grooves. Preferably the grooves have width which is comprises between one third and two thirds of said shortest distance. The width of the grooves and said shortest distance can furthermore have a maximal ratio of 27.5%, 30%, 32%, 34%, 36%, 38%, 40%, 42%, 44%, 46%, 48%, 50%, 52%, 54%, 56%, 58%, 60%, 62%, 64%, 66%, 68%, 70% and 72.5% (although in theory this can go up to 80%, 85%, 90%, 95% or 100%). The width of the grooves and said shortest distance can furthermore have a minimal ratio of 72.5%, 70%, 68%, 66%, 64%, 62%, 60%, 58%, 56%, 54%, 52%, 50%, 48%, 46%,

44%, 42%, 40%, 38%, 36%, 34%, 32%, 30% and 27.5% (which may go down to 20%, 15%, 10% or 5% in theory). The width of the groove needs to be sufficient to allow a desired tilting angle, but must not be too high to allow for the ungrooved part of the cell to support the tile. Furthermore, it can be argued that the width of the grooves should be optimized to reduce the amount of material necessary for the production of the gameboard.

In a preferred embodiment, the grooves have a depth and a width, whereby said depth is at least 10%, preferably at least 25%, more preferably at least 33% of said width. This ratio can however depend on other factors as well. Therefore, a range of ratios is suggested of depth to width: 10%, 12.5%, 15%, 17.5%, 20%, 22.5%, 25%, 27.5%, 30%, 32%, 34%, 36%, 38%, 40%, 42%, 44%, 46%, 48%, 50%, 52%, 54%, 56%, 58%, 60%, 62%, 64%, 66%, 68%, 70%, 72%, 74%, 76%, 78%, 80%, 82%, 84%, 86%, 88%, 90%, 95%, 100%, 110%, 120% or more. This ratio can furthermore be dependent on the shape of the tiles and the (relative) dimensions thereof. Generally, a ratio is desired so that the tile can be easily tilted to an angle which allows for easy lifting of the tile. Although this can again be dependent on the player in question and the (relative) dimensions of tile, a practical tilting angle of at least 30° is desirable, which would require a ratio of about 10%-60% between depth and width, preferably about 22%-42% between depth and width.

The gameboard can furthermore be provided with anti-skid elements on the bottom surface or other elements, such as an adjustable foot in order to be able to put the gameboard under an angle, which allows a player to use it without having to be bent over the gameboard.

In a preferred embodiment, each of the cells of the grid comprises a magnet or a magnetizable element. Said magnet or magnetizable element is located underneath or at the surface of the top side of the gameboard, but is not underneath or at the grooves. Most preferably, the magnet or magnetizable element is located centrally in the ungrooved part of the cell. This allows an easy attachment of Sudoku tiles which are themselves provided with a magnet or magnetizable element. Furthermore, if the magnets or magnetizable elements of both the gameboard and the tiles are intelligently shaped (square, rectangular, triangular, polygonal …), this can also ensure a proper positioning of the tile (in the cell center and/or with the text/number/symbol on the tile positioned so it can be read). By not placing the magnet or magnetizable element near the groove or underneath it, the tile can be more easily removed from the gameboard after tilting it, thereby strongly reducing the magnetic interaction between gameboard and tile. The lingering magnetic interaction will be weakened sufficiently to remove the

tile from the gameboard without disturbing the gameboard itself this way. It is therefore furthermore preferred to minimize the size of the magnet or magnetizable element of the gameboard and/or of the tiles to reduce unwanted magnetic effects. The magnets or magnetizable elements can also be a magnetic or magnetizable coating, which could further simplify the production process as it does not require the construction process to introduce certain parts, but can be restricted to a post-construction coating step.

In a preferred embodiment, the depth of the grooves is comprised between 1.0 mm and 4.0 mm, preferably between 1.5 mm and 3.5 mm, more preferably comprised between 2.0 mm and 2.5 mm. Possible upper and lower bounds for the depth of the grooves are 1.0 mm, 1.1 mm, 1.2 mm, 1.3 mm, 1.4 mm, 1.5 mm, 1.6 mm, 1.7 mm, 1.8 mm, 1.9 mm, 2.0 mm, 2.1 mm, 2.2 mm, 2.3 mm, 2.4 mm, 2.5 mm, 2.6 mm, 2.7 mm, 2.8 mm, 2.9 mm, 3.0 mm, 3.1 mm, 3.2 mm, 3.3 mm, 3.4 mm, 3.5 mm, 3.6 mm, 3.8 mm, 3.9 mm, 4.0 mm or higher. Of course, values therein between are also comprised in the range.

In a preferred embodiment, the width of the grooves is comprised between 3 mm and 18 mm, preferably between 4 and 14 mm, more preferably between 5 and 12 mm. Possible upper and lower bounds for the width of the grooves can be: 4 mm, 6.5 mm, 7.0 mm, 7.5 mm, 8.0 mm, 8.5 mm, 9.0 mm, 9.5 mm, 10.0 mm, 10.5 mm, 11.0 mm, 11.5 mm, 12.0 mm, 12.5 mm, 13.0 mm, 13.5 mm, 14.0 mm, 14.5 mm, 15.0 mm, 15.5 mm, 16.0 mm, 16.5 mm, 17.0 mm, 17.5 mm, 18.0 mm or higher. Of course, values therein between are also comprised in the range.

In a preferred embodiment, the grooves are distanced from each other over a shortest distance comprised between 15 mm and 30 mm, preferably between 18 mm and 25 mm. Possible upper and lower bounds for said shortest distance are 15 mm, 16 mm, 17 mm, 18 mm, 19 mm, 20 mm, 21 mm, 22 mm, 23 mm, 24 mm, 25 mm, 26 mm, 27 mm, 28 mm, 29 mm, 30 mm, but are not limited thereto and can be higher or lower, such as 8 mm, 10 mm, 12 mm, 14 mm, 32 mm, 34 mm, etc.

In a preferred embodiment, the gameboard has a maximal thickness comprised between 0.5 cm and 4 cm, preferably between 0.6 cm and 3 cm, more preferably about 0.7 to 1.5 cm. Possible upper and lower bounds for said thickness are 5 mm, 6 mm, 7 mm, 8 mm, 9 mm, 10 mm, 11 mm, 12 mm, 13 mm, 14 mm, 15 mm, 16 mm, 17 mm, 18 mm, 19 mm, 20 mm, 21 mm, 22 mm, 23 mm, 24 mm, 25 mm, 26 mm, 27 mm, 28 mm, 29 mm, 30 mm, 32 mm, 34 mm, 36 mm, 38 mm, 40 mm, but are not limited thereto and can be higher or lower, such as 3 mm, 4 mm, 45 mm, 50 mm, 60 mm, 70 mm, etc.

In a preferred embodiment, the gameboard comprises PVC, preferably a PVC foamboard, more preferably a closed-cell PVC foamboard and most preferably FOREX®. These materials are ideal for the manufacturing of the proposed gameboard as they allow machining, such as milling or etching, are very lightweight and economic, but possess the necessary strength to only need a small thickness of the gameboard to provide enough resilience and avoid fractures (both in use as in processing). Furthermore they are particularly suited for being printed on as they retain ink excellently. FOREX® especially excels in these characteristics, with a dense closed-cell PVC foam core covered with a durable PVC coating for the top and bottom surface. Other materials are however also possible and have their merits, for instance: MDF, a type of mineral-organic composite such as Corian®, a type of high-pressure laminate (HPL) plate such as Trespa®, and a type of composite panel such as Dibond®.

In a preferred embodiment, each of the grooves extends uninterruptedly across the top side of the gameboard. Preferably the gameboard is reinforced at the bottom side in a direction along the bottom side and perpendicular to the grooves, or at the very least not parallel to the grooves. The advantages of having the grooves extend uninterruptedly across the top side of the gameboard lies mainly in the extreme ease of manufacturing, where all possible techniques can be used without restrictions or need for expensive and complex machinery, more manual labor or more intricate and thus more expensive construction elements. The reinforcements can be added during or after the manufacturing process, if necessary at all.

In a preferred embodiment, the gameboard is manufactured by milling of a flat sheet of material. Optionally, the manufacturing step of milling is preceded by a manufacturing step wherein said flat sheet is provided with a printed pattern relating to the grid of the gameboard. The design of the gameboard is ideal for such a manufacturing technique as it has a constant cross-sectional profile. This will be discussed further in the document as well. Alternative techniques which share some if not all of the advantages of milling due to the advantageous profile of the board are extrusion, additive manufacturing and 3D printing.

In an alternative embodiment, the lines of the second set are raised at least partially over their substantially entire length with respect to the top side of the gameboard. Said raised lines thereby separate either individual columns or groups of columns from the grid from each other, and also reinforce the gameboard. Preferably, two of the lines of the second set are thusly raised, thereby separating three equal groups of columns (preferably 3 in each group) of the grid from each other. Most preferably, the gameboard is produced through additive manufacturing.

In a second aspect, the invention provides a number of methods for manufacturing a gameboard for playing Sudoku. The first of these methods comprises the following steps:

a. providing a flat sheet, preferably with a rectangular top surface, more preferably with a square top surface;
b. attaching a plurality, preferably 7,8 or 9, of elongate slats to said sheet equidistantially and parallel with respect to the other slats, thereby creating parallel equidistant grooves in between the slats, whereby said slats have a predetermined width and a predetermined distance from each other to allow tilting of Sudoku tiles;
c. applying two sets of visually discernible markings on the top side of the gameboard, whereby the first set of markings is applied on and along a first lateral edge of the slats, whereby the second set of markings is equidistantially applied perpendicular to said first set of markings and whereby said markings indicate a grid suitable for playing Sudoku by placing Sudoku tiles thereon.

Preferably said slats have a second lateral edge which is chamfered or beveled (more preferably under angles as proposed in the document).

The second of these methods comprises the following steps:

a. providing a flat sheet, preferably with a minimal thickness of 5 mm, more preferably of 1 cm, optionally providing said flat sheet with a printed pattern relating to the grid of the gameboard;
b. milling a plurality, preferably 7, 8 or 9, of elongate, parallel and equidistant grooves extending at least partially, preferably entirely, across the top side of said flat sheet, said grooves having a predetermined depth and a width to allow tilting of Sudoku tiles;
c. applying two sets of visually discernible markings on the top side of the gameboard, whereby the first set of markings is applied along a first lateral edge of the grooves, whereby the second set of markings is equidistantially applied perpendicular to said first set of markings and whereby said markings indicate a grid suitable for playing Sudoku by placing Sudoku tiles thereon.

Preferably said grooves have a second lateral edge which is chamfered or beveled (more preferably under angles as proposed in the document).

The third of these methods comprises the following steps:

a. providing a flat sheet, preferably with a minimal thickness of 5 mm, more preferably of 1 cm, optionally providing said flat sheet with a printed pattern relating to the grid of the gameboard;
b. extruding said flat sheet through an extrusion profile comprising a top side and a substantially flat bottom side, whereby the top side of said profile comprises a plurality, preferably 7, 8 or 9, of equidistantially placed recesses for extruding a plurality of grooves into the milled sheet;
c. applying two sets of visually discernible markings on the top side of the gameboard, whereby the first set of markings is applied along a first lateral edge of the grooves, whereby the second set of markings is equidistantially applied perpendicular to said first set of markings and whereby said markings indicate a grid suitable for playing Sudoku by placing Sudoku tiles thereon.

Preferably said grooves have a second lateral edge which is chamfered or beveled (more preferably under angles as proposed in the document).

The advantages of the proposed methods speak for themselves. Not only does the product manufactured this way allow for the tilting of tiles to remove these in an easy fashion, it also can be very easily manufactured due do its intelligent design. Due to the constant cross-sectional profile, a great deal of manufacturing techniques can be advantageously used to manufacture the product. As mentioned, milling, additive manufacturing (3D printing or simply actual attachment of components through glue or other adhesives), extrusion are especially interesting since the easy design makes these exceptionally suitable for the production of the gameboard. Particularly certain embodiment as proposed in this document (for instance, with beveled or chamfered edges) are preferable for certain manufacturing techniques (manufacturing by milling for instance prefers obtuse angles over more acute angles), as has been discussed in the document as well.

Most preferably, the gameboard manufactured with said method is a gameboard furthermore according to one of the embodiments of the gameboard described in this document, with the mentioned advantages.

In a third aspect, the invention provides a kit for playing Sudoku. Said kit comprises a gameboard according to any one of the proposed embodiments in this document and a plurality of tiles shaped for playing Sudoku on the gameboard, whereby the Sudoku tiles are adapted to allow tilting of at least a predetermined tilting angle when partially pushed into the grooves of the gameboard, preferably whereby the tilting angle is at least 10°, more preferably at least 30°. Preferably these tiles have a square top side. The number of tiles will in the case of regular sized Sudoku boards be at least 81 (for

other applications, the number of tiles can be easily correctly changed, for instance at least 16, at least 625 or others). However additional tiles are preferably be included (in case of loss, or if more tiles are required in different colors, shapes or other distinguishing characteristics to indicate a difference between 'known' tiles and tiles guessed/reasoned by players). The tiles have a top side and a back side. The top side is provided with a number between 1 and 9 in amounts sufficient to play Sudoku (again, this depends on the actual type of puzzle, so symbols, other numbers, etc. are possible as well). These markings can be printed or etched for instance.

Optionally, the back side of the tiles can be different from the top side and be provide with numbers (or others) as well in order to be able to use the same tile to indicate a 'known' and a 'guessed' number.

Optionally, the gameboard can be provided with pinholes in the cells and the Sudoku tiles with pins suitable for being introduced into the pinholes in order to easily affix the Sudoku tiles. Vice versa, the gameboard cells can have pins and the Sudoku tiles can have pinholes.

In a further embodiment, the gameboard of the kit is a gameboard as described in the document, having magnets or magnetizable elements in the cells of the Sudoku grid, while the Sudoku tiles comprise magnets or magnetizable elements as well, thereby enabling magnetic interaction between the gameboard and the tiles, specifically magnetic attraction. This force would not need to be strong as it is the intent that the tiles can be removed easily, but still strong enough to hold the tiles in place and more specifically, affix the tiles so they are affixed correctly in the intended cell (centered and not occupying multiple cells). This can be achieved by having the magnets or magnetizable elements of the gameboard and/or of the tiles shaped and located specifically that they favor one or more relative position with respect to each other. Furthermore, by shaping the magnets or magnetizable elements, they can ensure that the Sudoku tiles are both positioned centrally in the desired cell, but also in a correct orientation (making sure the numbers are all oriented the same and not some sideways or upside down). Possible shapes of the magnets or magnetizable elements can be made to match, for instance triangular, square, rectangular, polygonal, etc. (bearing in mind that the top surface of the element or magnet in question is discussed here).

The invention is further described by the following non-limiting examples which further illustrate the invention, and are not intended to, nor should they be interpreted to, limit the scope of the invention.

The present invention will be now described in more details, referring to examples that are not limitative.

Examples

Example 1:

FIG. 1A-B-C describe an embodiment of a gameboard for playing Sudoku by placing and removing Sudoku tiles as described in the document. FIG. 1A shows an isometric view of the gameboard, while FIG. 1B shows a top view of the gameboard, and FIG. 1C shows a lateral view of the gameboard along a longitudinal axis of the grooves (1). The gameboard comprises a flat sheet, square in this case. The top side of the gameboard is suited for playing Sudoku with Sudoku tiles, and the bottom is generally flat. The top side is provided with a number of grooves (1), in this case 9, which extend parallel to each other across the entire gameboard and are placed equidistantially. The grooves (1) separate support planes (2) which are meant to support a Sudoku tile that has been placed, while the grooves (1) are of a dimension to allow tilting of said placed tile, by pushing the end of the tile that is extended above the groove (1) downward and into the groove (1), thereby tilting the tile. Possible depths and widths of the grooves and the width of the support plane (2) (shortest distance between neighboring grooves) have been discussed in this document, however, the preferred dimensions are 2 to 2.5 mm for the depth of the grooves, 5 to 12 mm for the width of the grooves and 18 to 25 mm for the width of the support plane (2). The entire board has a thickness between 0.5 cm and 2 cm, preferably about 1 cm. The gameboard is furthermore provided with a first (3) and a second set (4) of markings on the top side, which sets are perpendicular to each other, and indicate the Sudoku grid as known in the art. As can be seen, the markings of the first set (3) are parallel to the grooves (1) and are placed on a first lateral edge of the grooves (1). The markings can differ in thickness, pattern and/or color to separate subgrids (12) (3x3 cells) and/or cells from each other.

FIG. 2A and 2B show further embodiment of the gameboard according to the invention, wherein magnets or magnetizable elements (5) are comprised. Said magnets or magnetizable elements (5) are underneath the mentioned support planes (2) or are located at the surface (or can even be a magnetic or magnetizable coating as mentioned). The magnet or magnetizable element (5) of the cell can be placed close to the grooves of the cell, in order to minimalize the necessary force to be exerted on the tile to tilt it (by having a smaller moment by reducing the length of the force arm), or can be placed further away from the grooves, to reduce magnetic forces on the tilted tile by increasing the distance in between. Most preferably, said magnets or

magnetizable elements are relatively small compared to a tile or a cell, thus enabling light attachment, but also efficiently adjusting the position of the tile to fit in the intended cell in a desired orientation.

The gameboard can furthermore be provided with a plurality of Sudoku tiles (7) as can be seen in FIG. 4A and 4B to provide a kit for playing Sudoku. Said tiles have a top side (8) provided with a marking (10), in this case a number. The tiles are dimensioned in order to match with the cells of the grid of the gameboard, preferably a bit smaller than the cells. As mentioned, the tiles can also have a back side (9) that differs from the front side, in this case in view of the background color, thus allowing the tile to be used as both a 'known' number and a 'guessed' number.

Furthermore, the tiles can comprise a magnet or magnetizable element (13) in the tile (or be coated with a magnetic or magnetizable coating) in order to be affixed to the gameboard through magnetic interaction with the gameboard, specifically with a magnet or magnetizable element (5) in the gameboard. In FIG. 6A-B-C, such a possibility is presented, whereby the magnet (or magnetizable element) (13) in the tile is shaped as a triangular prism, as is the magnetizable element (or magnet) (5) in the cells of the gameboard. These are positioned in such a way that the preferred positioning of the tile on a cell is centered in said cell, as well as oriented so that the tile is readable by a player.

Example 2:

FIG. 3A and 3B describe a gameboard according to what is described earlier in example 1, without magnets or magnetizable elements this time although these could be easily implemented according to the instructions of this document. In this embodiment, the lines of the first set are raised (6) with respect to the rest of the top side of the gameboard. This way, a clear demarcation is present to separate the rows of the grid, which makes placing a tile easier, and disallows interference of tiles from different rows, thereby possible disturbing the game.

The gameboard can furthermore be provided with a plurality of Sudoku tiles as can be seen in FIG. 4A and 4B to provide a kit for playing Sudoku.

Example 3:

In FIG. 5A-B-C-D a method for positioning and removing tiles from the gameboard is shown. FIG. 5A shows a situation from a lateral view in which a first Sudoku tile (7) is present on a gameboard according to previous example 2, as well as a second Sudoku tile. A player can then tilt the second Sudoku tile by exerting a force on the part of the

tile that is extended over the groove. By exerting said force, this part of the tile is pushed downwards, thereby pushing the remaining part of the tile upwards as a lever. FIG. 5B shows the same action, on the gameboard according to example 1. Both situations clearly show the ease of tilting and subsequently lifting the tile without disturbing other tiles. FIG. 5C illustrates the placement of the tile, while FIG. 5D shows the removal of it. The fulcrum (11) around which the tile is tilted is clearly illustrated here. It is furthermore obvious in the figures that the tile is somewhat smaller than the cell.

It is supposed that the present invention is not restricted to any form of realization described previously and that some modifications can be added to the presented example of fabrication without reappraisal of the appended claims. For example, the present invention has been described referring to (regular sized) Sudoku, but it is clear that the invention can be applied to other logical puzzles for instance such as Kakuros, Futoshikis, and the likes.

Claims

1. Gameboard for playing Sudoku by placing and removing Sudoku tiles on and from said gameboard, whereby said gameboard is a substantially planar, preferably square or rectangular, sheet, comprising a top side which is provided with a plurality, preferably 7, 8 or 9, of elongate, parallel and equidistant grooves extending at least partially across said top side, said grooves having a predetermined depth and a width to allow tilting of the Sudoku tiles, preferably up to a minimal tilting angle between the gameboard and the tilted tile of at least 10°, more preferably said minimal tilting angle being at least 30°.

2. Gameboard for playing Sudoku according to the preceding claim 1, whereby the top side of the gameboard is provided with visually discernible markings indicating a grid of cells each for placing a Sudoku tile on, whereby said markings comprise a first set of parallel lines and a second set of parallel lines perpendicular to said first set of parallel lines, and whereby the grooves have a first lateral edge along which the lines of the first set extend.

3. Gameboard for playing Sudoku according to any one of the preceding claims 1 or 2, wherein the grooves have a second lateral edge which is beveled or chamfered, preferably whereby said beveled or chamfered second lateral edge makes an angle between the plane of the gameboard and the second lateral edge which is comprised between 30° and 70°.

4. Gameboard for playing Sudoku according to any one of the preceding claims 2 to 3, wherein one or more, preferably either all but two or all but one or all, of the lines of the first set are at least partially raised over their substantially entire length with respect to the top side of the gameboard, thereby separating individual rows of the grid.

5. Gameboard for playing Sudoku according to any one of the preceding claims 1 to 4, whereby the grooves have a width which is comprised between one fourth and three fourths of a shortest distance between two neighboring grooves, preferably between one third and two thirds of a shortest distance between two neighboring grooves.

6. Gameboard for playing Sudoku according to any one of the preceding claims 1 to 5, whereby the grooves have a depth and a width, whereby said depth is at least 25%, preferably at least 33%, more preferably at least 50%, of said width.

7. Gameboard for playing Sudoku according to any one of the preceding claims 2 to 6, wherein each of the cells of the grid comprises a magnet or a magnetizable element, whereby said magnet or magnetizable element is located underneath or at the surface of the top side of the gameboard and whereby said magnet or magnetizable element is not located underneath or at the grooves, preferably whereby said magnet or magnetizable element is located centrally in the ungrooved part of each cell.

8. Gameboard for playing Sudoku according to any one of the preceding claims 1 to 7, whereby the grooves have a depth comprised between 1.5 mm and 3 mm, preferably between 2.0 mm and 2.5 mm inclusive, whereby the grooves have a width comprised between 5 mm and 12 mm, and a distance between neighboring grooves comprised between 16 mm and 30 mm.

9. Gameboard for playing Sudoku according to any one of the preceding claims 1 to 8, whereby the gameboard has a maximal thickness comprised between 5 mm and 20 mm, preferably between 8 mm and 14 mm, more preferably about 10 mm, a length comprised between 20 cm and 40 cm, preferably between 25 cm and 35 cm, and a breadth comprised between 20 cm and 40 cm, preferably between 25 cm and 35 cm.

10. Gameboard for playing Sudoku according to any one of the preceding claims 1 to 9, whereby said gameboard substantially comprises PVC, preferably a PVC foamboard, more preferably a closed-cell PVC foamboard, and most preferably FOREX.

11. Gameboard for playing Sudoku according to any one of the preceding claims 2 to 10, whereby each of the grooves extends uninterruptedly across the top side of the gameboard.

12. Gameboard for playing Sudoku according to the preceding claim 11, whereby the gameboard is manufactured through milling of a PVC sheet.

13. Gameboard for playing Sudoku according to the preceding claim 11, whereby the gameboard is manufactured through extrusion or through additive manufacturing.

14. Gameboard for playing Sudoku according to any one of the preceding claims 1 to 13, whereby the gameboard is reinforced at the bottom side in a direction along the bottom side and perpendicular to the grooves, preferably by one or

more reinforcing cross laths attached to said bottom side, whereby said reinforcing cross laths are perpendicular to the grooves.

15. Method for manufacturing a gameboard for playing Sudoku, comprising the following steps:

a. providing a flat sheet, preferably with a rectangular top surface, more preferably with a square top surface;

b. attaching a plurality, preferably 7, 8 or 9, of elongate slats to said flat sheet equidistantially and parallel with respect to the other slats, thereby creating parallel equidistant grooves, whereby said slats have a predetermined width and a predetermined distance from each other to allow tilting of Sudoku tiles;

c. applying two sets of visually discernible markings on the top side of the gameboard, whereby the first set of markings is applied on and along a first lateral edge of the slats, whereby the second set of markings is equidistantially applied perpendicular to said first set of markings and whereby said markings indicate a grid suitable for playing Sudoku by placing Sudoku tiles thereon;

preferably whereby said slats have a second lateral edge which is chamfered or a beveled.

16. Method for manufacturing a gameboard for playing Sudoku, comprising the following steps:

a. providing a flat sheet, preferably with a minimal thickness of 5 mm, more preferably of 1 cm;

b. milling a plurality, preferably 7, 8 or 9, of elongate, parallel and equidistant grooves extending at least partially, preferably entirely, across the top side of said flat sheet, said grooves having a predetermined depth and a width to allow tilting of Sudoku tiles;

c. applying two sets of visually discernible markings on the top side of the gameboard, whereby the first set of markings is applied along a first lateral edge of the grooves, whereby the second set of markings is equidistantially applied perpendicular to said first set of markings and whereby said markings indicate a grid suitable for playing Sudoku by placing Sudoku tiles thereon;

preferably whereby said grooves have a second lateral edge which is chamfered or beveled.

17. Method for manufacturing a gameboard for playing Sudoku, comprising the following steps:

    a. providing a flat sheet, preferably with a minimal thickness of 5 mm, more preferably of 1 cm;

    b. extruding said flat sheet through an extrusion profile comprising a top side and a substantially flat bottom side, whereby the top side of said profile comprises a plurality, preferably 7, 8 or 9, of equidistantially placed recesses for extruding a plurality of grooves into the milled sheet;

    c. applying two sets of visually discernible markings on the top side of the gameboard, whereby the first set of markings is applied along a first lateral edge of the grooves, whereby the second set of markings is equidistantially applied perpendicular to said first set of markings and whereby said markings indicate a grid suitable for playing Sudoku by placing Sudoku tiles thereon;

    preferably whereby said grooves have a second lateral edge which is chamfered or beveled.

18. Method for manufacturing a gameboard for playing Sudoku according to any one of the preceding claims 15 to 17, whereby the gameboard is a gameboard according to any one of the preceding claims 1 to 10.

19. Kit for playing Sudoku, comprising a gameboard according to any one of the preceding claims 1 to 14, and comprising a plurality of Sudoku tiles shaped for playing Sudoku on said gameboard, whereby the Sudoku tiles are adapted to allow tilting of at least a predetermined tilting angle when partially pushed into the grooves of the gameboard, preferably whereby the tilting angle is at least 10°, more preferably at least 30°.

20. Kit for playing Sudoku, comprising a gameboard according to any one of the preceding claims 7 to 14, and comprising a plurality of Sudoku tiles shaped for playing Sudoku on said gameboard, whereby the Sudoku tiles are adapted to allow tilting of at least a predetermined tilting angle when partially pushed into the grooves of the gameboard, preferably whereby the tilting angle is at least 10°, more preferably at least 30°, and wherein the Sudoku tiles comprise a magnet or a magnetizable element adapted to interact with the magnets or

magnetizable elements in the gameboard, thereby removably affixing a placed Sudoku tile to the gameboard through magnetic interaction and accurately positioning said Sudoku tile in a desired cell of the grid.

FIGURES

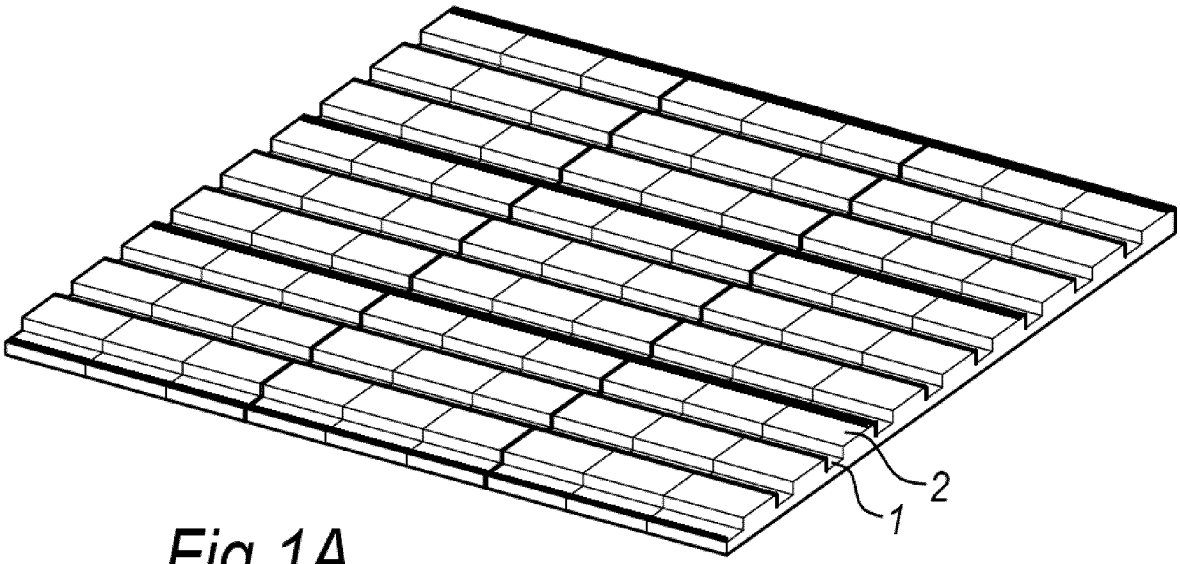

Fig 1A

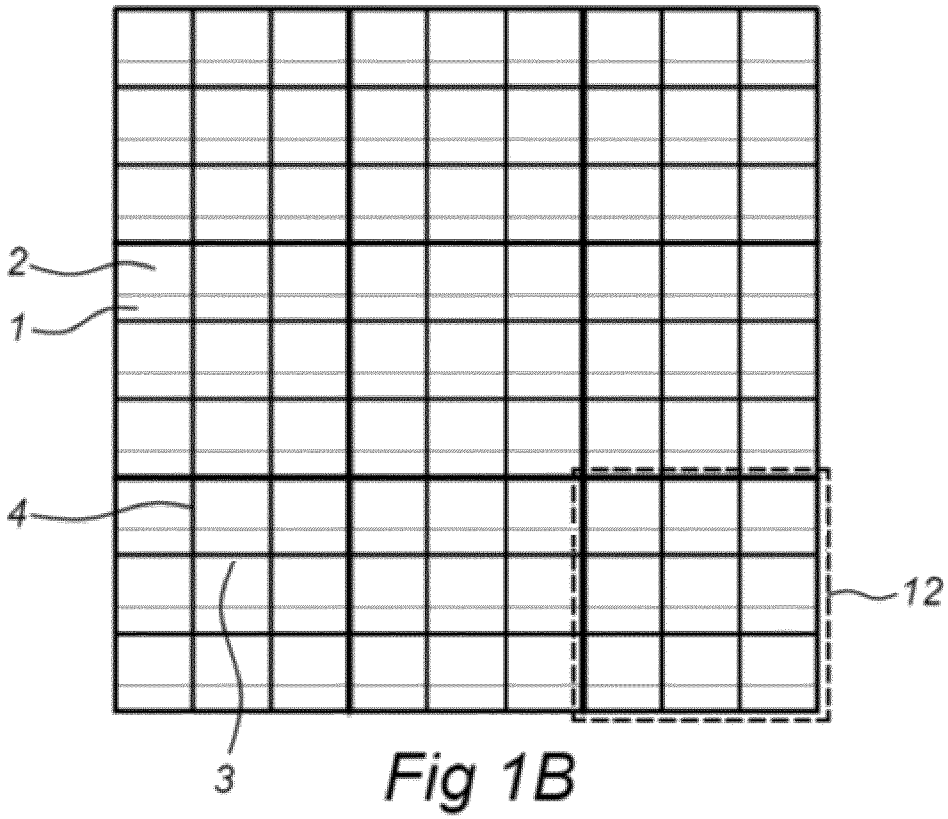

Fig 1B

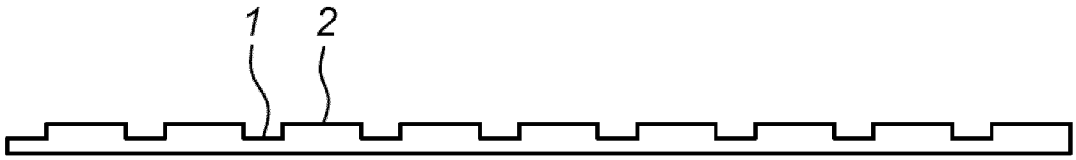

Fig 1C

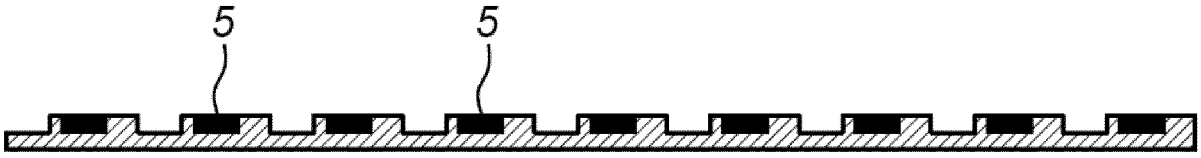

Fig 2A

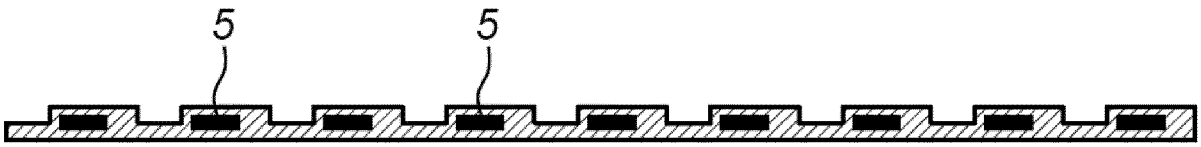

Fig 2B

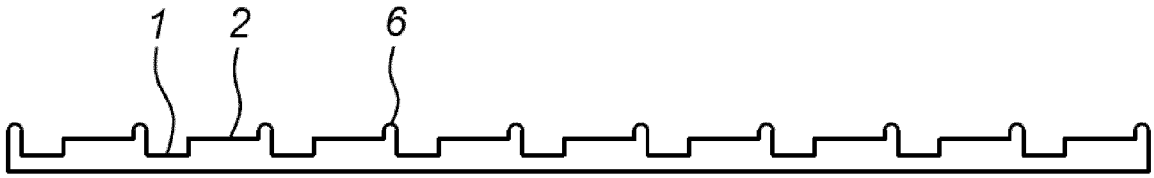

Fig 3A

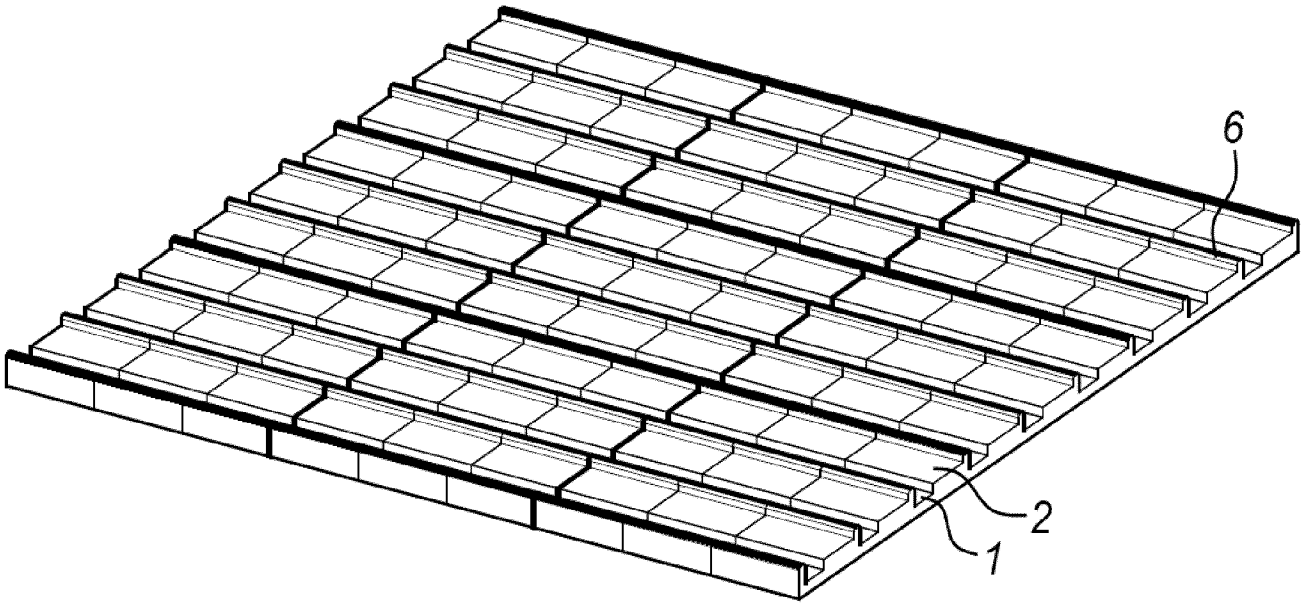

Fig 3B

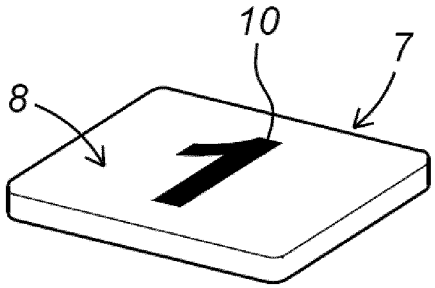

Fig 4A

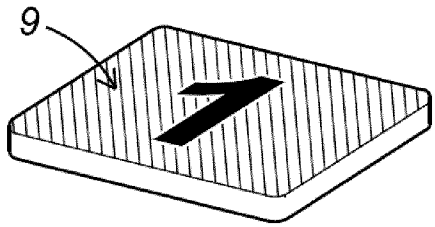

Fig 4B

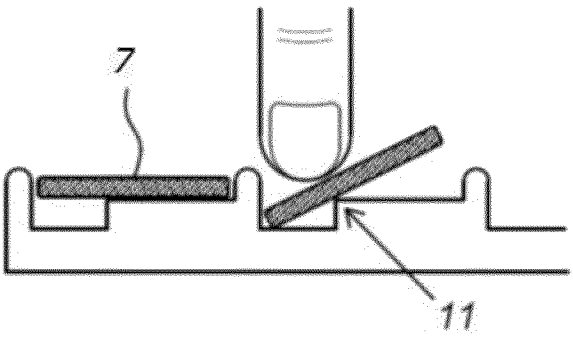

Fig 5A

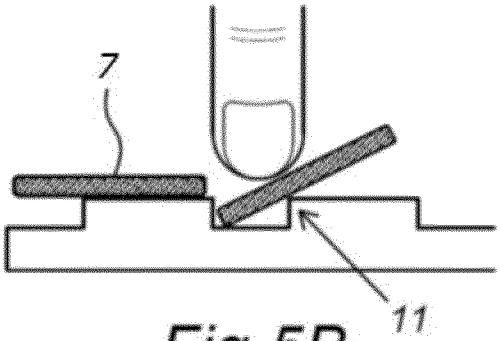

Fig 5B

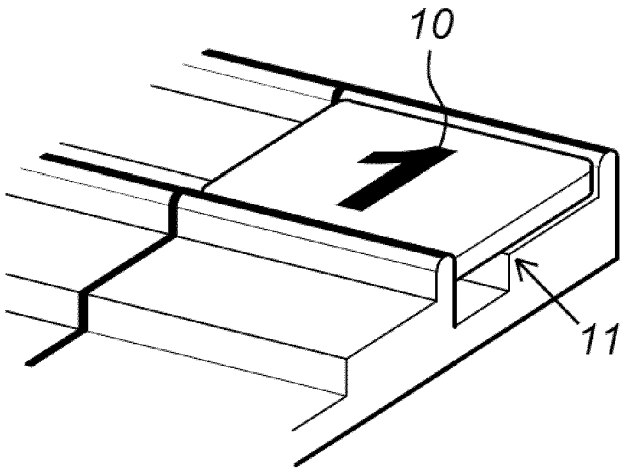

Fig 5C

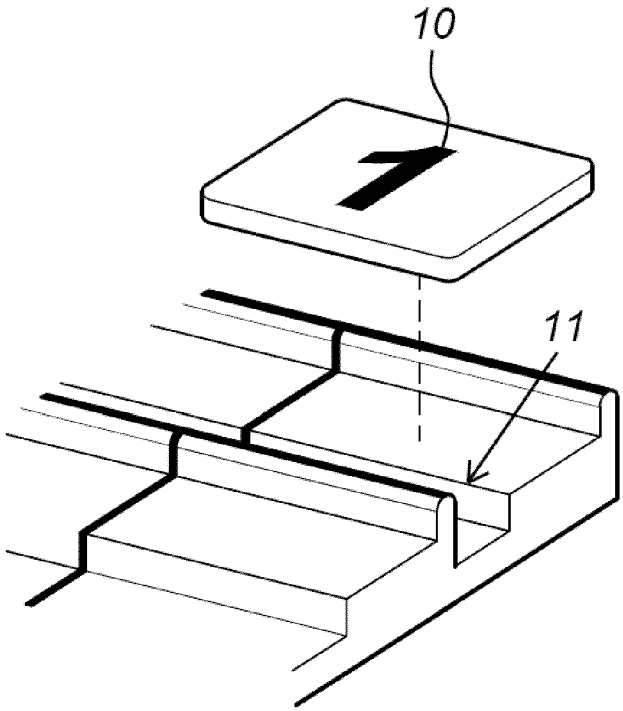

Fig 5D

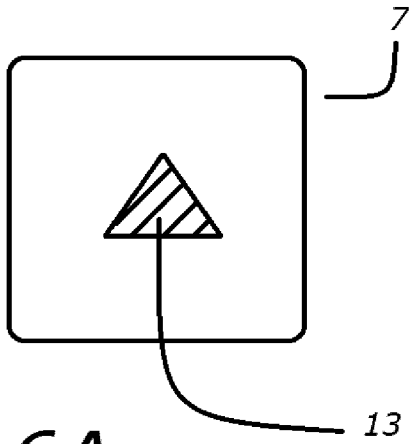

Fig 6A

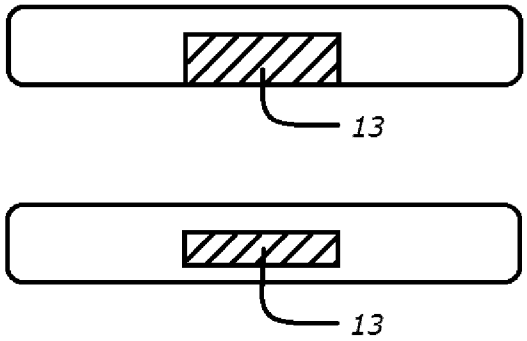

Fig 6B

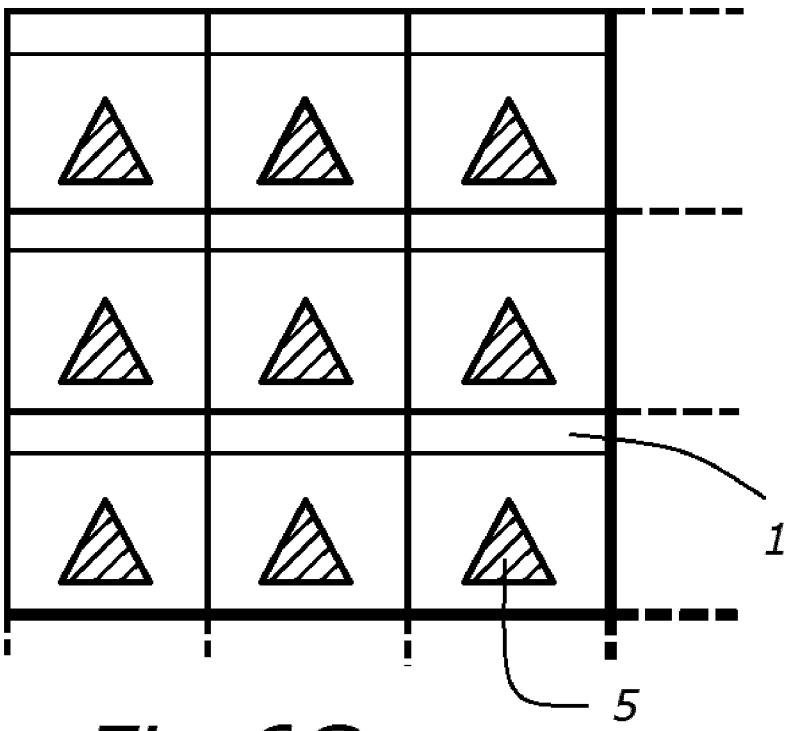

Fig 6C

INTERNATIONAL SEARCH REPORT

International application No
PCT/EP2016/059085

A. CLASSIFICATION OF SUBJECT MATTER
INV. A63F3/00 A63F3/04 A63F1/00
ADD.

According to International Patent Classification (IPC) or to both national classification and IPC

B. FIELDS SEARCHED

Minimum documentation searched (classification system followed by classification symbols)
A63F

Documentation searched other than minimum documentation to the extent that such documents are included in the fields searched

Electronic data base consulted during the international search (name of data base and, where practicable, search terms used)
EPO-Internal, WPI Data

C. DOCUMENTS CONSIDERED TO BE RELEVANT

Category*	Citation of document, with indication, where appropriate, of the relevant passages	Relevant to claim No.
X	US 2007/284815 A1 (RAMSEY RONALD [US]) 13 December 2007 (2007-12-13) cited in the application	1-3,11, 19
Y	paragraph [0014]; figure 2	7,20

X	US 1 462 471 A (ALPINER BENJAMIN W) 24 July 1923 (1923-07-24) the whole document	1,11

Y	DE 20 2007 003486 U1 (MRECHES EVA M [DE]) 10 May 2007 (2007-05-10) the whole document	7,20

X	JP 2012 100739 A (ROYAL KOGYO KK) 31 May 2012 (2012-05-31)	1-6, 8-10,12, 13,15, 16,18,19
Y	paragraphs [0028] - [0032]; figures 9-11	7,20

	-/--	

[X] Further documents are listed in the continuation of Box C.

[X] See patent family annex.

* Special categories of cited documents :

"A" document defining the general state of the art which is not considered to be of particular relevance

"E" earlier application or patent but published on or after the international filing date

"L" document which may throw doubts on priority claim(s) or which is cited to establish the publication date of another citation or other special reason (as specified)

"O" document referring to an oral disclosure, use, exhibition or other means

"P" document published prior to the international filing date but later than the priority date claimed

"T" later document published after the international filing date or priority date and not in conflict with the application but cited to understand the principle or theory underlying the invention

"X" document of particular relevance; the claimed invention cannot be considered novel or cannot be considered to involve an inventive step when the document is taken alone

"Y" document of particular relevance; the claimed invention cannot be considered to involve an inventive step when the document is combined with one or more other such documents, such combination being obvious to a person skilled in the art

"&" document member of the same patent family

Date of the actual completion of the international search	Date of mailing of the international search report
13 June 2016	24/06/2016

Name and mailing address of the ISA/	Authorized officer
European Patent Office, P.B. 5818 Patentlaan 2 NL - 2280 HV Rijswijk Tel. (+31-70) 340-2040, Fax: (+31-70) 340-3016	Schut, Timen

1

Form PCT/ISA/210 (second sheet) (April 2005)

INTERNATIONAL SEARCH REPORT

International application No
PCT/EP2016/059085

C(Continuation). DOCUMENTS CONSIDERED TO BE RELEVANT

Category*	Citation of document, with indication, where appropriate, of the relevant passages	Relevant to claim No.
A	US 2010/171264 A1 (ZARUMBA NORBERT LOUIS [US]) 8 July 2010 (2010-07-08) the whole document	1,19
X	US 4 819 945 A (PORCHEDDU EDMOND J [US]) 11 April 1989 (1989-04-11) figure 3	1,11,19
X	US 4 886 278 A (SALTER AVRIL M [GB] ET AL) 12 December 1989 (1989-12-12) figures 1-3	1,11,14, 19

1

INTERNATIONAL SEARCH REPORT

Information on patent family members

International application No
PCT/EP2016/059085

Patent document cited in search report	Publication date	Patent family member(s)	Publication date
US 2007284815 A1	13-12-2007	NONE	
US 1462471 A	24-07-1923	NONE	
DE 202007003486 U1	10-05-2007	NONE	
JP 2012100739 A	31-05-2012	NONE	
US 2010171264 A1	08-07-2010	NONE	
US 4819945 A	11-04-1989	AU 3296889 A	05-10-1989
		EP 0373194 A1	20-06-1990
		US 4819945 A	11-04-1989
		WO 8908482 A1	21-09-1989
US 4886278 A	12-12-1989	GB 2211746 A	12-07-1989
		US 4886278 A	12-12-1989