(12) INTERNATIONAL APPLICATION PUBLISHED UNDER THE PATENT COOPERATION TREATY (PCT)

(19) World Intellectual Property Organization
International Bureau

(43) International Publication Date
17 January 2008 (17.01.2008)

PCT

(10) International Publication Number
WO 2008/006175 A1

(51) International Patent Classification:
B65D 21/024 (2006.01) *E03B 3/02* (2006.01)
B65D 90/02 (2006.01) *B65D 88/74* (2006.01)
C02F 3/00 (2006.01) *C02F 1/46* (2006.01)
B65D 21/028 (2006.01) *E03B 11/00* (2006.01)
C02F 1/00 (2006.01)

(21) International Application Number:
PCT/AU2007/000981

(22) International Filing Date: 13 July 2007 (13.07.2007)

(25) Filing Language: English

(26) Publication Language: English

(30) Priority Data:
2006903768 13 July 2006 (13.07.2006) AU
2006904781 1 September 2006 (01.09.2006) AU

(71) Applicant *(for all designated States except US)*: **HI-FLOW SYSTEMS PTY LTD** [AU/AU]; 13 Emplacement Crescent, Hamilton Hill, Western Australia 6163 (AU).

(72) Inventor; and

(75) Inventor/Applicant *(for US only)*: **WALLIS, Simon, James** [AU/AU]; 83 Wheatly Street, Gosnells, Western Australia 6110 (AU).

(74) Agent: **WRAY & ASSOCIATES**; Level 4, The Quadrant, 1 William Street, Perth, Western Australia 6000 (AU).

(81) Designated States *(unless otherwise indicated, for every kind of national protection available)*: AE, AG, AL, AM, AT, AU, AZ, BA, BB, BG, BH, BR, BW, BY, BZ, CA, CH, CN, CO, CR, CU, CZ, DE, DK, DM, DO, DZ, EC, EE, EG, ES, FI, GB, GD, GE, GH, GM, GT, HN, HR, HU, ID, IL, IN, IS, JP, KE, KG, KM, KN, KP, KR, KZ, LA, LC, LK, LR, LS, LT, LU, LY, MA, MD, ME, MG, MK, MN, MW, MX, MY, MZ, NA, NG, NI, NO, NZ, OM, PG, PH, PL, PT, RO, RS, RU, SC, SD, SE, SG, SK, SL, SM, SV, SY, TJ, TM, TN, TR, TT, TZ, UA, UG, US, UZ, VC, VN, ZA, ZM, ZW.

(84) Designated States *(unless otherwise indicated, for every kind of regional protection available)*: ARIPO (BW, GH, GM, KE, LS, MW, MZ, NA, SD, SL, SZ, TZ, UG, ZM, ZW), Eurasian (AM, AZ, BY, KG, KZ, MD, RU, TJ, TM), European (AT, BE, BG, CH, CY, CZ, DE, DK, EE, ES, FI, FR, GB, GR, HU, IE, IS, IT, LT, LU, LV, MC, MT, NL, PL, PT, RO, SE, SI, SK, TR), OAPI (BF, BJ, CF, CG, CI, CM, GA, GN, GQ, GW, ML, MR, NE, SN, TD, TG).

Published:
— *with international search report*

For two-letter codes and other abbreviations, refer to the "Guidance Notes on Codes and Abbreviations" appearing at the beginning of each regular issue of the PCT Gazette.

(54) **Title:** MODULAR WASTEWATER TREATMENT TANKS WITH RELEASABLE CONNECTIONS

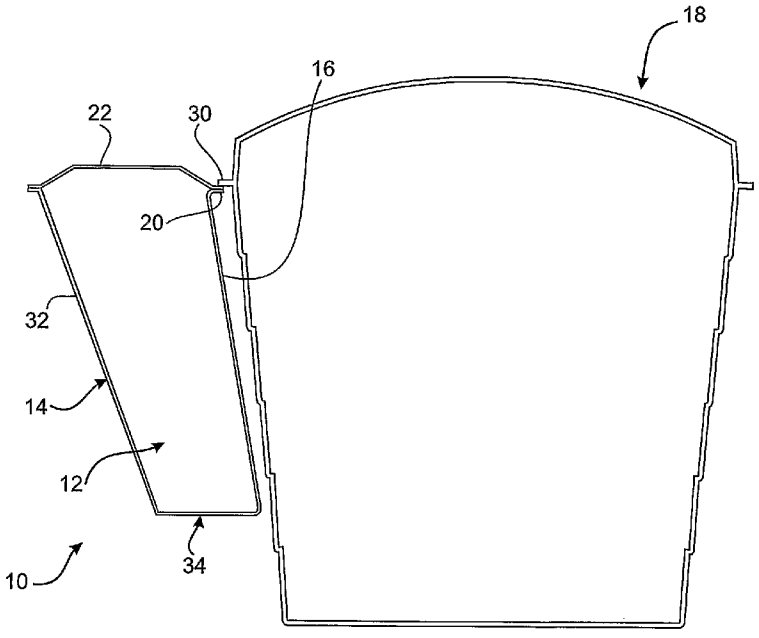

(57) **Abstract:** A tank (10) comprising one or more walls (14) defining a cavity (12), characterised in that at least one wall has provided thereon a an engaging means so as to allow releasable engagement with a separate primary vessel (18). A modular wastewater treatment system (40) and a method for wastewater treatment is also claimed.

WO 2008/006175 A1

Modular wastewater treatment tanks with releasable connections

Field of the Invention

The present invention relates to a tank. More particularly, the tank of the present invention is intended to engage with a primary vessel.

Background Art

Any system that requires the movement of a liquid or solution, for example water, with the use of a pump, must install a separate tank, also known as a collection well. The tank houses the pump and stores a reservoir of water for distribution. The tank is generally smaller than the primary vessel to which it is in fluid communication with.

When the primary vessel and the tank are installed on a site, they are required by Australian Standards to be separated by a minimum of 1 meter to allow for movement between the main primary vessels as a result of the earth subsiding and to thus protect any connecting pipe work. This requirement may also provide better access to any pipe work and/or tanks when maintenance or replacement is required. However, the 1 meter requirement significantly increases the amount of space required by the tanks on site and can make installation difficult on smaller sites. Further, the separation of the main primary vessels can make locating the tank on site difficult after installation.

Presently, most tanks are constructed from concrete. They are consequently costly and difficult to handle and/or transport. Currently, the tanks are constructed as individual vessels with no importance placed on their ability to interconnect or align closely with the main primary vessels so as to maximise the efficient use of space.

Tanks moulded from plastics materials are known. However, these are designed to stand alone as separate tanks and thus the problems with space occupation and handling in a small space are still prevalent.

Tanks are often incorporated into water treatment systems, generally as a storage device from which the water is directed to the treatment circuit. Water treatment systems having more than one tank in series, are known. However, in all of the "multiple tank" systems disclosed, all of the tanks are connected only via a fluid conduit for the transfer of water between the two. Further, whilst modular water treatment systems have been developed previously, none of these systems readily allow adjustment of the system either by the integration of additional modules into the system, nor do they allow removal or rearrangement of existing modules from or within the system.

The tank of the present invention has one object thereof to overcome substantially the problems of the prior art or at least provide a useful alternative thereto.

The discussion of the background art is included exclusively for the purpose of providing a context for the present invention. It should be appreciated that the discussion is not an acknowledgement or admission that any of the material referred to was common general knowledge in the field relevant to the present invention in Australia or elsewhere before the priority date.

Throughout the specification, unless the context requires otherwise, the word "comprise" or variations such as "comprises" or "comprising", will be understood to imply the inclusion of a stated integer or group of integers but not the exclusion of any other integer or group of integers.

Disclosure of the Invention

In accordance with the present invention there is provided a tank comprising one or more walls defining a cavity, characterised in that at least one wall has provided thereon an engaging means so as to allow releasable engagement of the tank with a separate primary vessel.

Preferably, the engaging means is one that enables the tank to be engaged and/or disengaged from the primary vessel as required.

The engaging means is preferably in the form of a connecting ridge.

More preferably, the tank is engaged to the primary vessel by, for example, hooking or bolting the connecting ridge over a complementary ridge located on the side of the primary vessel.

Preferably, the shape of the or each wall of the tank that is adjacent to the primary vessel is complementary with the shape of an adjacent wall of the primary vessel, thereby providing a continuous line of connection not just a discrete point of connection. This then provides greater support and stability to the tank in addition to a more stable connection. For example, a square tank attached to a round primary vessel would only really have one point of connection or at best, perhaps a small number of discrete points. A tank having a curved shape so as to be complimentary with a round primary vessel allows a continuous line of connection along the entire length of the tank.

It is advantageous that the shape of a wall of the tank that opposes the wall adjacent to the primary vessel is also complementary with the shape of the adjacent wall of the primary vessel.

The tank is preferably tapered such that the tank is narrower at its base. This increases space availability on or near the ground, and between other primary vessels present on the site. Further, by tapering the tank, a plurality of tanks are able to nest inside each other during transport and storage, thereby increasing the efficient use of space.

The tank preferably has at least one inlet conduit and at least one outlet conduit to facilitate the transfer of fluid to and/or from the primary vessel or other fluid collection facility and/or other tanks and/or an alternative location remote from the tank.

Preferably, the alternative location is a site or a variety of processes used on a site.

Preferably, the other fluid collection facility includes any one or more of mains water facility, rainwater tank and/or rainwater guttering or atmospheric water generator.

Preferably, the level of the outlet conduit is lower than the level of the inlet conduit, facilitating the transfer of fluid from the primary vessel to the tank (and to further tanks in the same manner) by gravity. This avoids the complication of the need for pumps and also provides energy benefits.

More preferably, the level of the outlet conduit is at least about 50mm lower than the level of the inlet conduit.

Alternatively, a pump may be used to facilitate the transfer of fluid.

Preferably, the tank is used as a treatment tank to facilitate the removal of impurities from the fluid.

More preferably, the tank is used as part of a modular treatment system in which one or more tanks are attached to the primary vessel or to each other, and whereby tanks can be added, substituted, removed or rearranged as required.

The tank preferably comprises means to treat fluid by way of, for example, biological filtration, physical filtration, chemical treatment (for example chlorination), light treatment (for example Ultra Violet light), and treatment by electrochemical means.

Where two or more tanks are employed in modular form, more than one treatment method may be adopted so as to provide a complete water management system for a site.

Preferably, one treatment method is adopted per tank.

The tank preferably comprises a cover.

Preferably, the cover comprises a releasably sealable access point to allow access to the tank cavity.

More preferably, the access point is releasably sealable by way of a hinged lid.

The tank is preferably constructed from lightweight durable material, for example plastics materials.

In accordance with the present invention there is further provided a modular wastewater treatment system comprising a primary vessel and a plurality of tanks, characterised in that one or more tanks are connected to the separate primary vessel, said tanks each having one or more walls defining a cavity, wherein at least one wall has provided thereon an engaging means so as to allow releasable engagement of the tank with the primary vessel.

Preferably, the tanks can be added, substituted, removed or rearranged as required.

Preferably, the engaging means is one that enables the tank to be engaged and/or disengaged from the primary vessel as required.

The engaging means is preferably in the form of a connecting ridge.

More preferably, the tank is engaged to the primary vessel by, for example, hooking or bolting the connecting ridge over a complementary ridge located on the side of the primary vessel.

Preferably, the shape of the or each wall of the tank that is adjacent to the primary vessel is complementary with the shape of an adjacent wall of the primary vessel, thereby providing a continuous line of connection not just a discrete point of connection. This then provides greater support and stability to the tank in addition to a more stable connection. For example, a square tank attached to a round primary vessel would only really have one point of connection or at best, perhaps a small number of discrete points. A tank having a curved shape so as to be

complimentary with a round primary vessel allows a continuous line of connection along the entire length of the tank.

It is advantageous that the shape of a wall of the tank that opposes the wall adjacent to the primary vessel is also complimentary with the shape of the adjacent wall of the primary vessel.

The tank is preferably tapered such that the tank is narrower at its base. This increases space availability on or near the ground, and between other primary vessels present on the site. Further, by tapering the tank a plurality of tanks are able to nest inside each other during transport and storage, thereby increasing the efficient use of space.

The tank preferably has at least one inlet conduit and at least one outlet conduit to facilitate the transfer of fluid to and/or from the primary vessel or other fluid collection facility and/or other tanks and/or an alternative location remote from the tank.

Preferably, the alternative location is a site or a variety of processes used on a site.

Preferably, the other fluid collection facility includes any one or more of mains water facility, rainwater tank and/or rainwater guttering or atmospheric water generator.

Preferably, the level of the outlet conduit is lower than the level of the inlet conduit, facilitating the transfer of fluid from the primary vessel to the tank (and to further tanks in the same manner) by gravity. This avoids the complication of the need for pumps and also provides energy benefits.

More preferably, the level of the outlet conduit is at least about 50mm below the level of the inlet conduit.

Alternatively, a pump may be used to facilitate the transfer of fluid.

Preferably, the tank is used as a treatment tank to facilitate the removal of impurities from the fluid.

The tank is preferably comprises means to treat fluid by way of, for example, biological filtration, physical filtration, chemical treatment (for example chlorination), light treatment (for example Ultra Violet light), and treatment by electrochemical means.

Where two or more tanks are employed in modular form, more than one treatment methods may be adopted so as to provide a complete water management system for a site.

Preferably, one treatment method is adopted per tank.

Preferably, the tank comprises a cover.

Preferably, the cover comprises a releasably sealable access point to allow access to the tank cavity.

More preferably, the access point is releasably sealable by way of a hinged lid.

The tank is preferably constructed from lightweight durable material, for example plastics materials.

In accordance with the present invention there is still further provided a method for wastewater treatment, the method characterised by the method steps of circulating wastewater from a primary collection vessel to one or more treatment tanks, and directing the treated water to an alternative location via an outlet conduit, wherein the or each tank has one or more walls defining a cavity, and at least one wall has provided thereon an engaging means so as to allow releasable engagement of the tank with the primary vessel.

Preferably, the engaging means is one that allows the tank to be engaged and/or disengaged from the primary vessel as required.

Preferably, the alternative location is a site or a variety of processes used on a site.

The engaging means is preferably in the form of a connecting ridge.

More preferably, the tank is engaged to the primary vessel by, for example, hooking or bolting the connecting ridge over a complementary ridge located on the side of the primary vessel.

Preferably, the shape of the or each wall of the tank that is adjacent to the primary vessel is complimentary with the shape of an adjacent wall of the primary vessel, thereby providing a continuous line of connection not just a discrete point of connection. This then provides greater support and stability to the tank in addition to a more stable connection. For example, a square tank attached to a round primary vessel would only really have one point of connection or at best, perhaps a small number of discrete points. A tank having a curved shape so as to be complimentary with a round primary vessel allows a continuous line of connection along the entire length of the tank.

It is advantageous that the shape of a wall of the tank that opposes the wall adjacent to the primary vessel is also complimentary with the shape of the adjacent wall of the primary vessel.

The tank is preferably tapered such that the tank is narrower at its base. This increases space availability on or near the ground, and between other primary vessels present on the site. Further, by tapering the tank near the base, a plurality of tanks are able to nest inside each other during transport and storage, thereby increasing the efficient use of space.

The tank preferably has at least one inlet conduit and at least one outlet conduit to facilitate the transfer of fluid to and/or from the primary vessel or other fluid collection facility and/or other tanks and/or the alternative location remote from the tank. Preferably, the other fluid collection facility includes any one or more of

mains water facility, rainwater tank and/or rainwater guttering or atmospheric water generator.

Preferably, the level of the outlet conduit is lower than the level of the inlet conduit, facilitating the transfer of water from the primary vessel to the tank (and to further tanks in the same manner) by gravity. This avoids the complication of the need for pumps and also provides energy benefits.

More preferably, the level of the outlet conduit is at least about 50mm below the level of the inlet conduit.

Alternatively, a pump may be used to facilitate the transfer of fluid.

Preferably, the tank is used as a treatment tank to facilitate the removal of impurities from the fluid.

More preferably, the tank is used as part of a modular treatment system in which one or more tanks are attached to the primary vessel or to each other, and whereby tanks can be added, substituted, removed or rearranged as required.

The tank is preferably comprises means to treat fluid by way of, for example, biological filtration, physical filtration, chemical treatment (for example chlorination), light treatment (for example Ultra Violet light), and treatment by electrochemical means.

Where two or more tanks are employed in modular form, more than one treatment methods may be adopted so as to provide a complete water management system for a site.

Preferably, one treatment method is adopted per tank.

Preferably, the tank comprises a cover.

Preferably, the cover comprises a releasably sealable access point to allow access to the tank cavity.

More preferably, the access point is releasably sealable by way of a hinged lid.

The tank is preferably constructed from lightweight durable material, for example plastics materials.

Brief Description of the Drawings

The present invention will now be described, by way of example only, with reference to one embodiment thereof and the accompanying drawings, in which:-

Figure 1 is a cross-sectional side view of a tank of the present invention in engagement with a primary vessel;

Figure 2 is a side view of the tank;

Figure 3 is a rear view of the tank;

Figure 4 is a top plan view of the tank without the cover in place, and

Figure 5 is a top plan view of a water management system using a series of tanks of the present invention for water treatment.

Best Mode(s) for Carrying Out the Invention

In Figures 1 to 5 there is shown a tank 10 in accordance with an embodiment of the present invention, in which the tank 10 is intended for use underground. The tank 10 comprises a cavity 12, and one or more walls 14. One of the walls 14 is an adjacent wall 16 that aligns with a primary vessel 18, the adjacent wall 16 having provided thereon a connecting ridge 20. A tank cover 22 is provided to facilitate closure of the cavity 12 of the tank 10 and an access point 24 is provided into the tank cover 22 to allow access to the tank cavity 12. The access point 24 can be closed to seal the cavity 12, for example, through the use of a hinged lid. The tank 10 is further provided with an inlet conduit 26 and an outlet conduit 28 to facilitate transfer of water from the primary vessel 18 to the tank 10. The inlet conduit 26 is connected to the primary vessel 18, and the outlet conduit 28

connects to another tank 10 or is directed back to a site as shown in Figure 5. The inlet conduit 26 is arranged such that it is positioned higher than the outlet conduit 28, for example at least about 50mm higher, best seen in Figures 2 and 3. This way, the flow of water in and out of the tank is effected by gravity and obviates the need for the use of pumps. This also provides a significant energy benefit. It will be appreciated that pumps can be used if desired or required.

The connecting ridge 20 is located on the adjacent wall 16 and is arranged such that it allows the tank 10 to be engaged with the primary vessel 18. The connecting ridge 20 engages with the primary vessel 18 by, for example bolting or hooking onto a complementary ridge 30 located on the primary vessel 18. The shape of the adjacent wall 16 is complimentary with the shape of the wall of the primary vessel 18. Figure 4 depicts one embodiment of a tank 10 that has an adjacent wall 16 that is curved in order to be complimentary with the shape of a round primary vessel 18. The shape of an opposing wall 32 is also complimentary with the shape of the primary vessel 18.

The tank 10 tapers downwardly such that the tank 10 is narrower at its base 34, and is advantageously constructed from a lightweight, durable material, for example plastics materials. This feature of the tank 10 being tapered allows a plurality of tanks 10 to nest inside each other during transport and storage.

It is envisaged that one or more tanks 10 may be integrated with one primary vessel 18. The tank(s) 10 may also be used as a modular wastewater treatment system 40, whereby one or more tanks 10 are attached to the primary vessel 18, as shown in Figure 5, or "piggy backed" in series on each other. At least one of the tanks 10 contains a filter media to facilitate the removal of impurities. Where more than one tank 10 is utilised in this manner, it is to be understood that each tank 10 may contain a different filter media to enable the removal of more than one type of impurity (biological or physical). It is further envisaged that the tank 10 may be used for chemical treatment (for example chlorination), electrochemical treatment, or light treatment (ultra violet). That is, in an arrangement of four tanks 10 connected in series in turn to a primary vessel 18, as shown in Figure 5, the use of differing treatment systems in each tank 10 will allow a plurality of

impurities to be removed from water passing therebetween. An arrangement such as this may provide a complete water management system for a site whereby different sources of water can be treated by a single system (for example storm water, bore water, process water).

With reference to Figure 5, the modular wastewater treatment system 40 incorporating a number of tanks 10 would operate as follows: a primary vessel 18 will generally form the source of water for the treatment system 40, wherein wastewater from the site is collected in the primary vessel 18. The water is transferred 42 via the inlet conduit 26 from the primary vessel 18 to a first adjoining tank 44 having the purpose of, for example, physical filtration. The output of the first tank 44 is directed to the second tank 46 which may be acting as, for example, a biological filter. The output of the second tank 46 directed to the third tank 48 for electrochemical treatment, to remove metal ions for example, and finally the output of the third tank 48 is directed to the fourth tank 50 where the water is, for example chlorinated, before being discharged from the system 52 and redirected to the site for use.

It is still further envisaged that the present invention will allow a number of tanks 10 to be transported or stored whilst occupying at least 60% less space than conventional tanks. Cost and space usage on site and during transport is minimised, and the need for complicated connecting conduit work is reduced.

It is understood that the 1 meter distance requirement between tanks is not necessary for the present invention in light of the fact that the tank 10 is securely engaged with the primary vessel 18 and thus, any movement of the primary vessel 18 will effect the same movement of the corresponding tank(s) 10 and vice versa. That is, the primary vessel 18 and the tank 10 behave as one object with respect to overall movement.

It is also understood that where a tank 10 is acting as a storage facility for water not requiring treatment, including rainwater, water from mains or water generated from an atmospheric water generator, the inlet conduit 26 may comprise a conduit

extending from guttering or a separate water collection facility, and the outlet conduit 28 may redirect the water straight to the site for use.

The stability and strength of piping installations (including the inlet conduit 26 and the outlet conduit 28) between the primary vessel 18 and the tank(s) 10 is also substantially improved as very little movement or flexibility of the piping is required to compensate for movement of the primary vessel 18 and/or tank(s) 10. This in turn results in maintenance costs and requirements being substantially reduced.

Finally, the engagement of the tank with the primary vessel 18 substantially reduces the difficulty in locating the tank 10 on site at a later date.

Modifications and variations such as would be apparent to the skilled addressee are considered to fall within the scope of the present invention.

The Claims Defining the Invention are as Follows:

1. A tank comprising one or more walls defining a cavity, characterised in that at least one wall has provided thereon an engaging means so as to allow releasable engagement of the tank with a primary vessel.

2. A tank according to claim 1, wherein the engaging means enables the tank to be readily engaged and/or disengaged from the primary vessel as required.

3. A tank according to claim 1 or 2, wherein the engaging means is provided in the form of a connecting ridge.

4. A tank according to claim 3, wherein the tank is engaged to the primary vessel by bolting the connecting ridge to a complementary ridge located on the primary vessel.

5. A tank according to claim 4, wherein the primary vessel is engaged by the tank by hooking the connecting ridge over the complimentary ridge located on the primary vessel.

6. A tank according to any one of the preceding claims, wherein the shape of the or each wall of the tank adjacent to the primary vessel is complimentary with an adjacent wall of the primary vessel.

7. A tank according to any one of the preceding claims, wherein the engagement of the tank to the primary vessel is achieved along a continuous line of connection.

8. A tank according to claim 6, wherein the shape of the wall of the tank that opposes the wall adjacent to the primary vessel is also complimentary with the shape of the adjacent wall of the primary vessel.

9. A tank according to any one of the preceding claims, wherein the tank is tapered such that the tank is narrower at its base.

10. A tank according to any one of the preceding claims, wherein a plurality of tanks are capable of nesting inside each other during transport and storage.

11. A tank according to any one of the preceding claims, wherein the or each tank has at least one inlet conduit and at least one outlet conduit, wherein the inlet conduit and the outlet conduit facilitate the transfer of fluid to and/or from the primary vessel or other fluid collection facility and/or other tanks an/or an alternative location remote from the tank.

12. A tank according claim 11, wherein the level of the outlet conduit is lower than the level of the inlet conduit.

13. A tank according to claim 11 or 12, wherein the transfer of fluid between the tank and the primary vessel and/or other tanks is effected by gravity.

14. A tank according to claim 11 or 12, wherein the transfer of fluid between the tank and the primary vessel and/or other tanks is effected by a pump.

15. A tank according to claim 11, wherein the other fluid collection facility is a mains water facility, rainwater tank and or rainwater guttering or atmospheric water generator.

16. A tank according to any one of the preceding claims, wherein the tank is used as a treatment tank to facilitate the removal of impurities.

17. A tank according to claim 16, wherein the tank comprises means to treat fluid by way of biological filtration, physical filtration, chemical treatment, light treatment and electrochemical treatment.

18. A tank according to any one of the preceding claims, wherein the tank comprises a cover.

19. A tank according to claim 18, wherein the cover comprises a releasably sealable access point.

20. A tank according to claim 19, wherein the access point is releasably sealable by way of a hinged lid.

21. A tank according any one of claims 1 to 20, wherein the tank is formed from plastic materials.

22. A modular wastewater treatment system comprising a separate primary vessel and a plurality of tanks, characterised in that one or more tanks are connected to the separate primary vessel, said tanks each having one or more walls defining a cavity, wherein at least one wall has provided thereon an engaging means so as to allow releasable engagement of the tank with the primary vessel.

23. A modular wastewater treatment system according claim 22, wherein tanks can be added or substituted for existing tanks, and/or existing tanks can be removed or rearranged as required.

24. A modular wastewater treatment system according to claim 22 or 23, wherein the engagement means allows the or each tank to be engaged and/or disengaged from the primary vessel as required.

25. A tank according to any one of claims 22 to 24, wherein the engaging means is provided in the form of a connecting ridge.

26. A modular wastewater treatment system according to claim 25, wherein the or each tank is engaged to the primary vessel by bolting the connecting ridge over a complementary ridge located on the primary vessel.

27. A modular wastewater treatment system according to any one of claims 22 to 26, wherein the shape of the or each wall of the or each tank adjacent to the primary vessel is complimentary with the shape of an adjacent wall of the primary vessel

28. A modular wastewater treatment system according to claim 27, wherein the shape of a wall of the or each tank that opposes the wall adjacent to the primary vessel is also complimentary to the shape of the adjacent wall of the primary vessel.

29. A modular wastewater treatment system according to any one of claims 22 to 28, wherein the engagement of the or each tank to the primary vessel is achieved along a continuous line of connection.

30. A modular wastewater treatment system according to any one of claims 22 to 29, wherein the or each tank has at least one inlet conduit and at least one outlet conduit and wherein the inlet conduit and the outlet conduit facilitate the transfer of fluid to and/or from the primary vessel or other fluid collection facility and/or other tanks and or an alternative location remote from the tank.

31. A modular wastewater treatment system according claim 30, wherein the level of the outlet conduit is positioned lower than the level of the inlet conduit.

32. A modular wastewater treatment system according to claim 30 or 31, wherein the transfer of fluid between the tank and the primary vessel and/or other tanks is effected by gravity.

33. A modular wastewater treatment system according to claim 30 or 31, wherein the transfer of fluid between the tank and the primary vessel and/or other tanks is effected by a pump.

34. A tank according to claim 30, wherein the other fluid collection facility is a mains water facility, rainwater tank and/or rainwater guttering or atmospheric water generator.

35. A modular wastewater treatment system according to any one of claims 22 to 34 wherein the or each tank is used as a treatment tank to facilitate the removal of impurities from the fluid.

36. A modular wastewater treatment system according to claim 35, wherein the or each tank comprises means to treat fluid by way of biological filtration, physical filtration, chemical treatment, light treatment or electrochemical treatment.

37. A modular wastewater treatment system according to claim 35 or 36, wherein more than one treatment method is employed.

38. A modular wastewater treatment system according to any one of claims 35 to 37, wherein one treatment method per tank is adopted.

39. A method for wastewater treatment, the method characterised by the method steps of circulating wastewater from a primary collection vessel to one or more treatment tanks, and directing the treated water back to an alternative location remote from the tank via an outlet conduit, wherein the or each tank has one or more walls defining a cavity, and at least one wall has provided thereon an engaging means so as to allow releasable engagement with the primary vessel.

40. A tank substantially as hereinbefore described with reference to Figures 1 to 4.

41. A modular wastewater treatment system as hereinbefore described with reference to Figure 5.

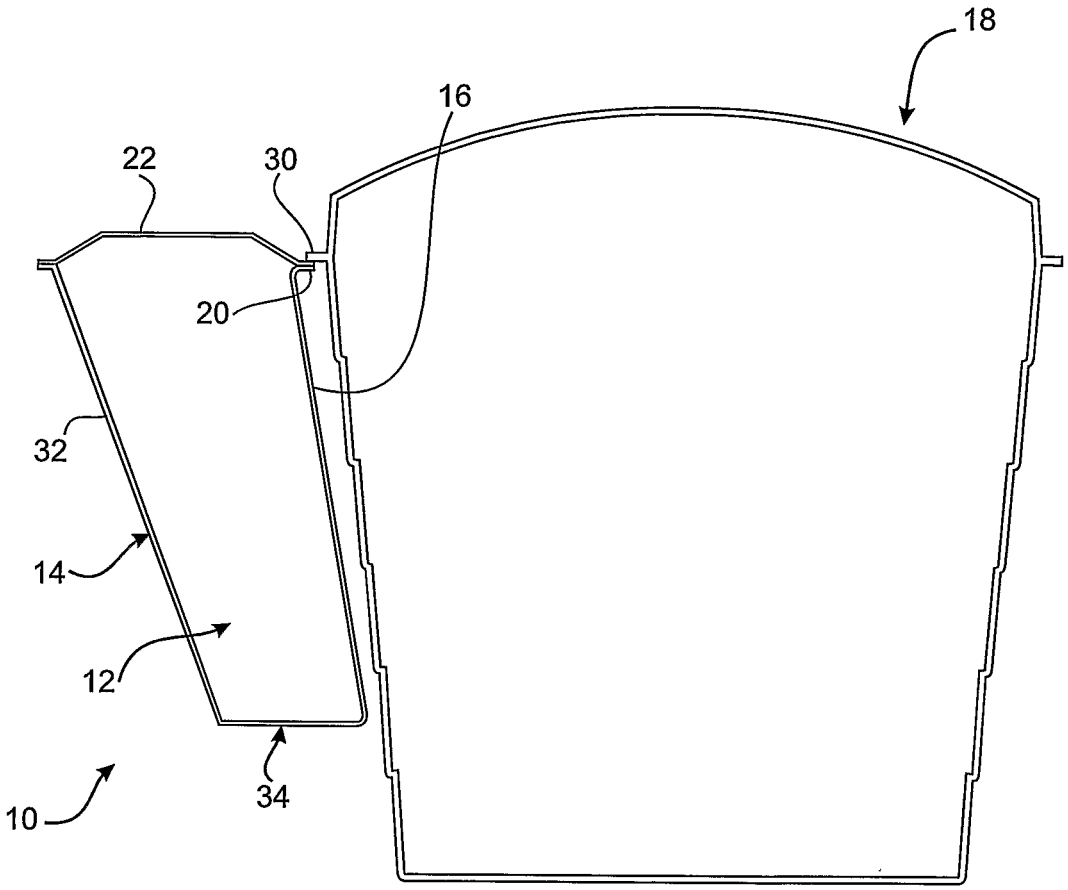

Fig. 1

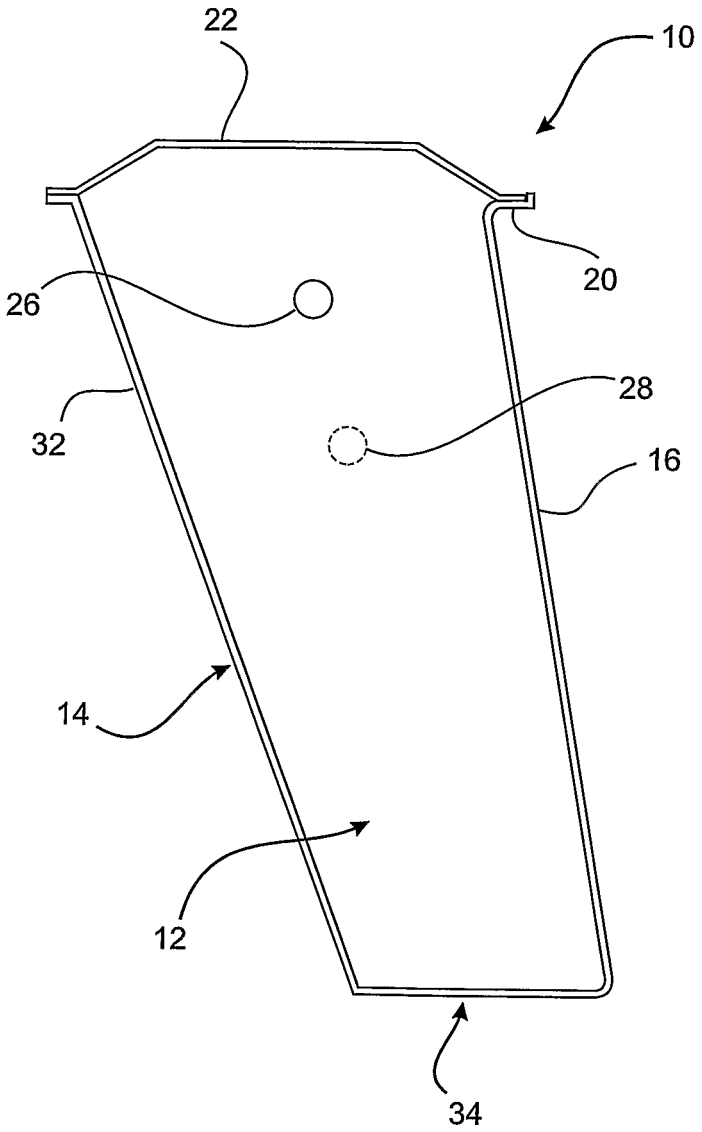

Fig. 2

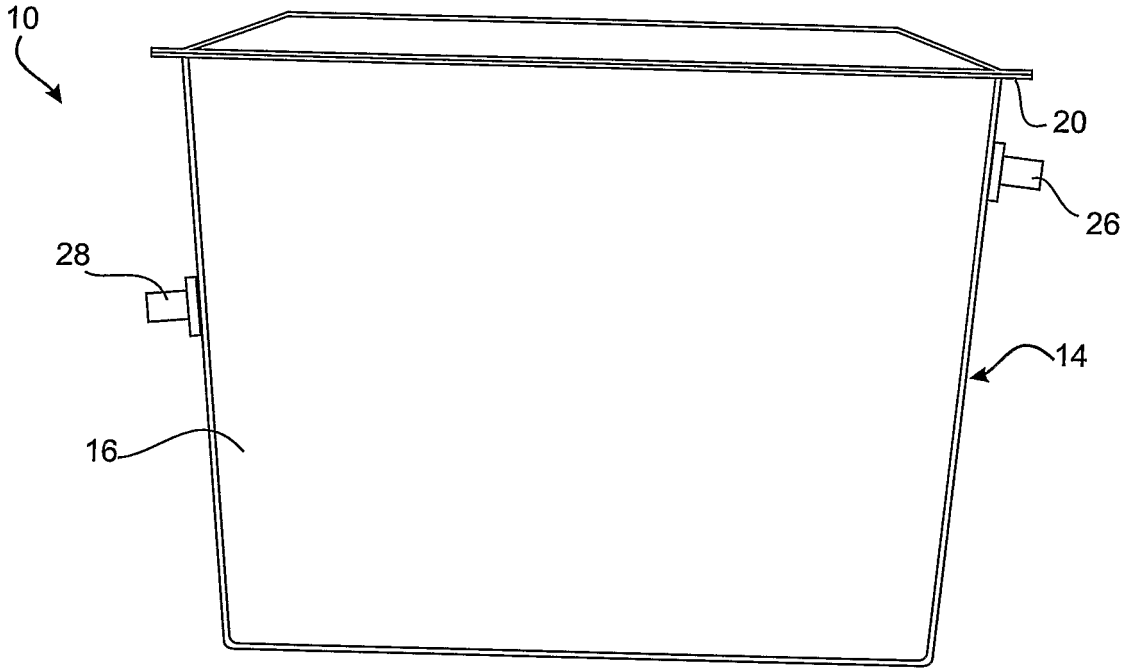

Fig. 3

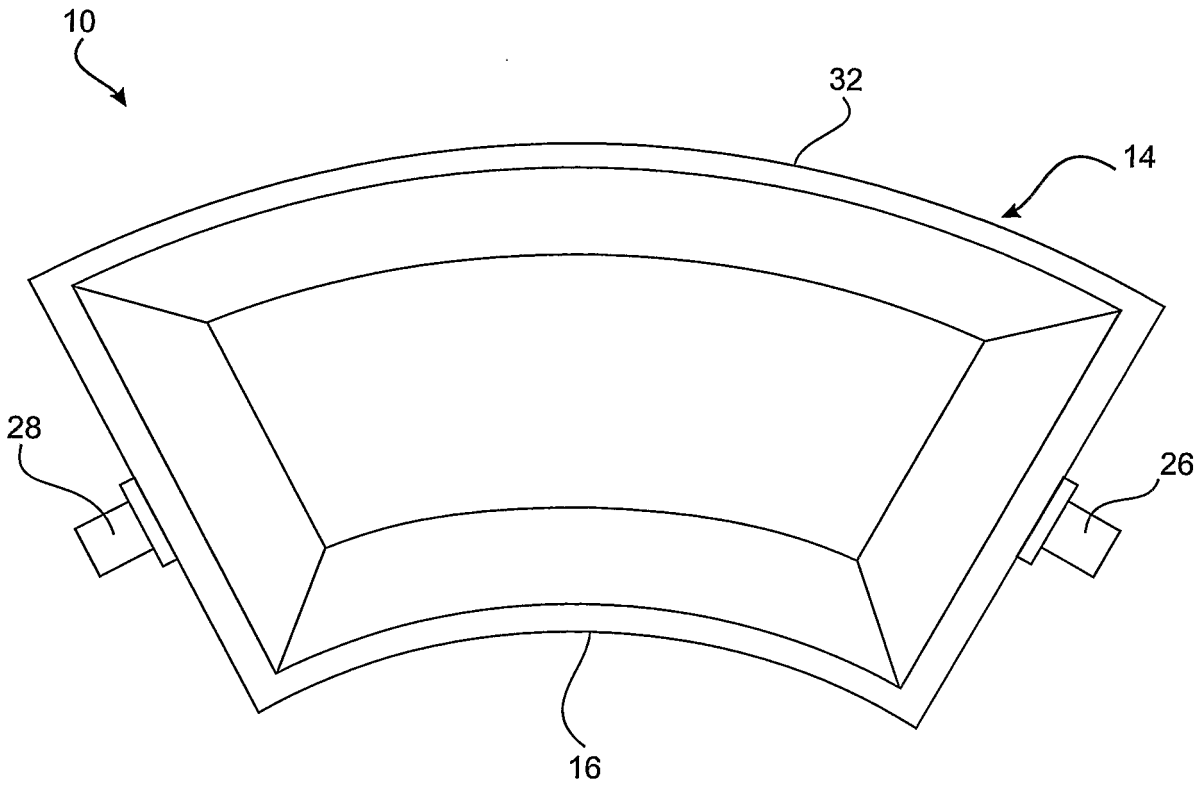

Fig. 4

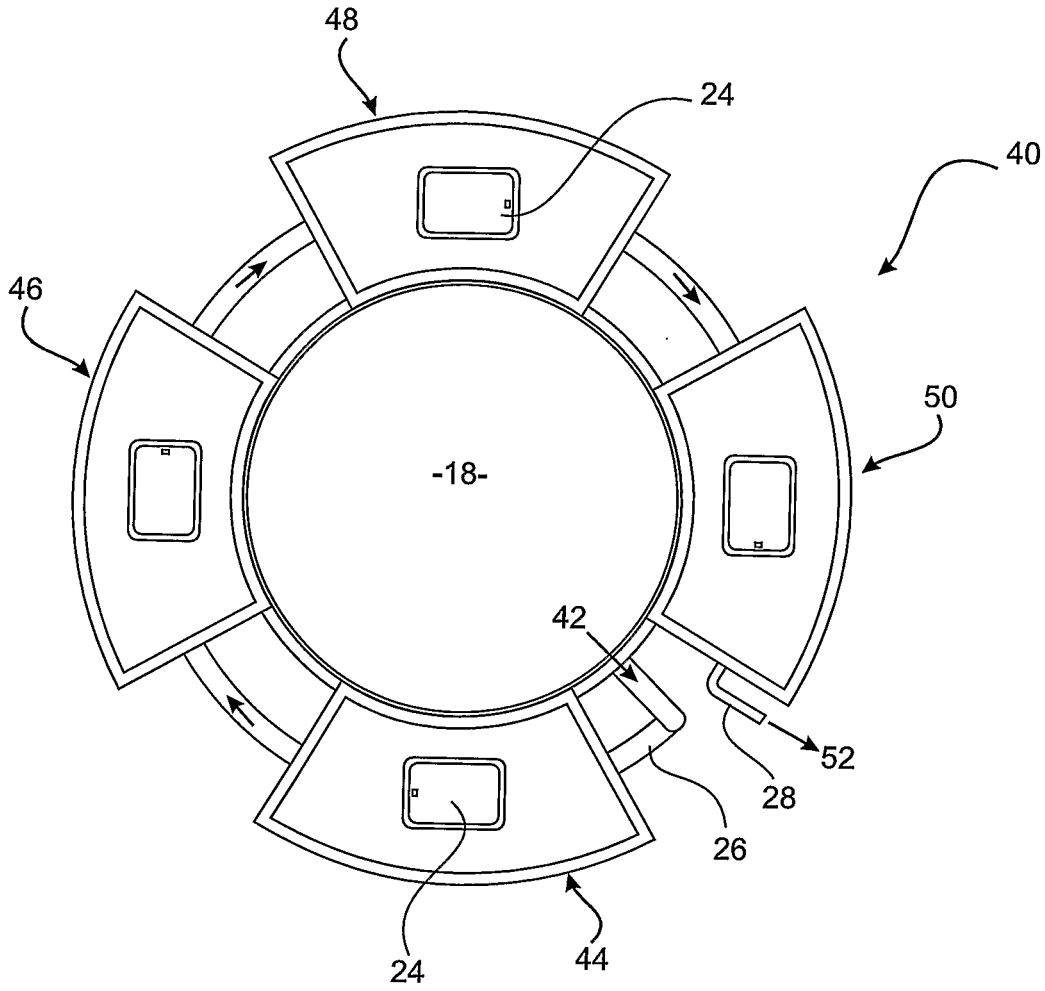

Fig. 5

INTERNATIONAL SEARCH REPORT

International application No.
PCT/AU2007/000981

A. CLASSIFICATION OF SUBJECT MATTER

Int. Cl.

B65D 21/024 (2006.01)	***B65D 90/02*** (2006.01)	***C02F 3/00*** (2006.01)
B65D 21/028 (2006.01)	***C02F 1/00*** (2006.01)	***E03B 3/02*** (2006.01)
B65D 88/74 (2006.01)	***C02F 1/46*** (2006.01)	***E03B 11/00*** (2006.01)

According to International Patent Classification (IPC) or to both national classification and IPC

B. FIELDS SEARCHED

Minimum documentation searched (classification system followed by classification symbols)

Documentation searched other than minimum documentation to the extent that such documents are included in the fields searched

Electronic data base consulted during the international search (name of data base and, where practicable, search terms used)
DWPI IPC: B65D88/-, B65D 90/-, B65D21/-, E03B/-, C02F 1/-, C02F 3/- with keywords: tank, modular, liquid, transfer, waste and similar terms.
ESPACE with above keywords.

C. DOCUMENTS CONSIDERED TO BE RELEVANT

Category*	Citation of document, with indication, where appropriate, of the relevant passages	Relevant to claim No.
X	GB 2380221 A (HEPWORTH BUILDING PRODUCTS LIMITED) 2 April 2003 Abstract; figures 1-20	1-41
X	Patents Abstracts of Japan, JP 09-038613 A (KAWAI KAKEN KOGYO KK) 10 February 1997 Abstract; figure 8	1-41
X	NZ 502429 A (AQUA BLUE ENVIRONMENTAL SYSTEMS LTD) 28 September 2001 Abstract; figures 1-3	1-21, 39, 40

[X] Further documents are listed in the continuation of Box C [X] See patent family annex

* Special categories of cited documents:

"A" document defining the general state of the art which is not considered to be of particular relevance

"E" earlier application or patent but published on or after the international filing date

"L" document which may throw doubts on priority claim(s) or which is cited to establish the publication date of another citation or other special reason (as specified)

"O" document referring to an oral disclosure, use, exhibition or other means

"P" document published prior to the international filing date but later than the priority date claimed

"T" later document published after the international filing date or priority date and not in conflict with the application but cited to understand the principle or theory underlying the invention

"X" document of particular relevance; the claimed invention cannot be considered novel or cannot be considered to involve an inventive step when the document is taken alone

"Y" document of particular relevance; the claimed invention cannot be considered to involve an inventive step when the document is combined with one or more other such documents, such combination being obvious to a person skilled in the art

"&" document member of the same patent family

Date of the actual completion of the international search	Date of mailing of the international search report
02 October 2007	08 OCT 2007
Name and mailing address of the ISA/AU AUSTRALIAN PATENT OFFICE PO BOX 200, WODEN ACT 2606, AUSTRALIA E-mail address: pct@ipaustralia.gov.au Facsimile No. (02) 6285 3929	Authorized officer **Jagdish Wable** AUSTRALIAN PATENT OFFICE (ISO 9001 Quality Certified Service) Telephone No : (02) 6283 2638

INTERNATIONAL SEARCH REPORT

International application No.
PCT/AU2007/000981

C (Continuation). DOCUMENTS CONSIDERED TO BE RELEVANT

Category*	Citation of document, with indication, where appropriate, of the relevant passages	Relevant to claim No.
X	US 6328890 B1 (THIBAULT) 11 December 2001 Abstract; figures 1-7	1-21, 39, 40
X	US 1715466 A (MILLER) 4 June 1929 Figures 1-5	1, 2, 40
X	GB 2186859 A (HOLDT) 26 August 1987 Abstract; figure 1	1, 2, 40
A	US 6180004 B1 (DREWERY) 30 January 2001 Figure 1	1, 22, 39
A	WO 1992/003386 A1 (BIOSCAN A.S.) 5 March 1992 Abstract; figure 1	1, 22, 39
A	US 6406619 B1 (DONALD ET AL) 18 January 2002 Abstract; figures 1-7	1, 22, 39
A	US 5110465 A (MCNEILL JR.) 5 May 1992 Abstract; figures 1-3	1, 22, 39

INTERNATIONAL SEARCH REPORT

International application No.
PCT/AU2007/000981

Box No. II Observations where certain claims were found unsearchable (Continuation of item 2 of first sheet)

This international search report has not been established in respect of certain claims under Article 17(2)(a) for the following reasons:

1. ☐ Claims Nos.:
because they relate to subject matter not required to be searched by this Authority, namely:

2. ☐ Claims Nos.:
because they relate to parts of the international application that do not comply with the prescribed requirements to such an extent that no meaningful international search can be carried out, specifically:

3. ☐ Claims Nos.:
because they are dependent claims and are not drafted in accordance with the second and third sentences of Rule 6.4(a)

Box No. III Observations where unity of invention is lacking (Continuation of item 3 of first sheet)

This International Searching Authority found multiple inventions in this international application, as follows:

See supplemental sheet.

1. ☒ As all required additional search fees were timely paid by the applicant, this international search report covers all searchable claims.
2. ☐ As all searchable claims could be searched without effort justifying additional fees, this Authority did not invite payment of additional fees.
3. ☐ As only some of the required additional search fees were timely paid by the applicant, this international search report covers only those claims for which fees were paid, specifically claims Nos.:
4. ☐ No required additional search fees were timely paid by the applicant. Consequently, this international search report is restricted to the invention first mentioned in the claims; it is covered by claims Nos.:

Remark on Protest

☐ The additional search fees were accompanied by the applicant's protest and, where applicable, the payment of a protest fee.

☐ The additional search fees were accompanied by the applicant's protest but the applicable protest fee was not paid within the time limit specified in the invitation.

☒ No protest accompanied the payment of additional search fees.

Supplemental Box
(To be used when the space in any of Boxes I to VIII is not sufficient)

Continuation of Box No: III

This International Application does not comply with the requirements of unity of invention because it does not relate to one invention or to a group of inventions so linked as to form a single general inventive concept.

In assessing whether there is more than one invention claimed, I have given consideration to those features which can be considered to potentially distinguish the claimed combination of features from the prior art. Where different claims have different distinguishing features they define different inventions.

This International Searching Authority has found that there are different inventions as follows:

- Claims 1-21 and 40 are directed to a tank comprising one or more walls defining a cavity. It is considered that the engaging means on at least one wall to allow releasable engagement of the tank with a primary vessel comprises a first distinguishing feature.

- Claims 22-38 and 41 are directed to a modular wastewater treatment system and claim 39 is directed to a method for wastewater treatment. It is considered that the wastewater treatment comprises a second distinguishing feature.

PCT Rule 13.2, first sentence, states that unity of invention is only fulfilled when there is a technical relationship among the claimed inventions involving one or more of the same or corresponding special technical features. PCT Rule 13.2, second sentence, defines a special technical feature as a feature which makes a contribution over the prior art.

The only feature common to all of the claims is a tank having engaging means on at least one wall so as to allow releasable engagement with a primary vessel. However this concept is not novel in the light of:

US 6328890
US 6180004
JP 2005212819
WO 1996/011155

See figures in all the documents.

This means that the common feature can not constitute a special technical feature within the meaning of PCT Rule 13.2, second sentence, since it makes no contribution over the prior art.

Because the common feature does not satisfy the requirement for being a special technical feature it follows that it cannot provide the necessary technical relationship between the identified inventions. Therefore the claims do not satisfy the requirement of unity of invention *a posteriori*.

INTERNATIONAL SEARCH REPORT

Information on patent family members

International application No.
PCT/AU2007/000981

This Annex lists the known "A" publication level patent family members relating to the patent documents cited in the above-mentioned international search report. The Australian Patent Office is in no way liable for these particulars which are merely given for the purpose of information.

Patent Document Cited in Search Report		Patent Family Member					
GB	2380221	WO	2003/027030				
JP	9038613		NONE				
NZ	502429		NONE				
US	6328890	CA	2314819	JP	2001145891		
US	1715466		NONE				
GB	2186859	AU	64983/86	CH	671556	DE	3640203
		FR	2594802	JP	62208360	US	4982858
US	6180004		NONE				
WO	1992/03386	DK	302789	NO	891805	SE	8902364
US	6406619		NONE				
US	5110465		NONE				

Due to data integration issues this family listing may not include 10 digit Australian applications filed since May 2001.

END OF ANNEX