Oct. 23, 1956 R. J. BARONE 2,767,607

ELECTRIC AND PORTABLE PIANO

Filed July 27, 1953 4 Sheets-Sheet 1

Fig. 1.

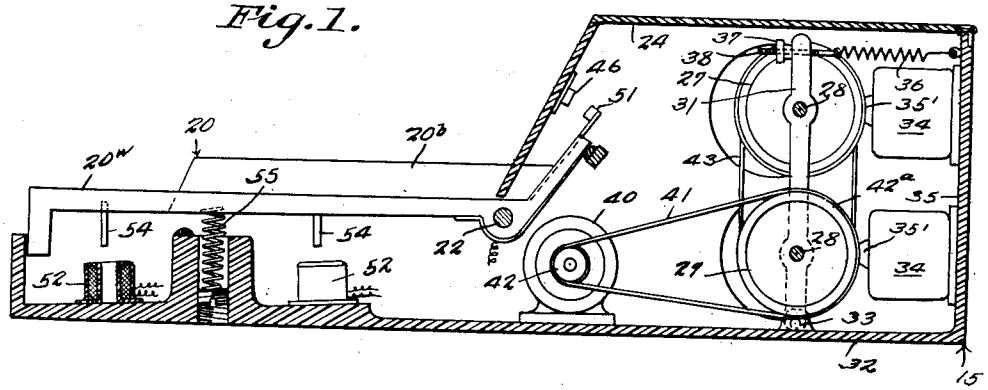

Fig. 2.

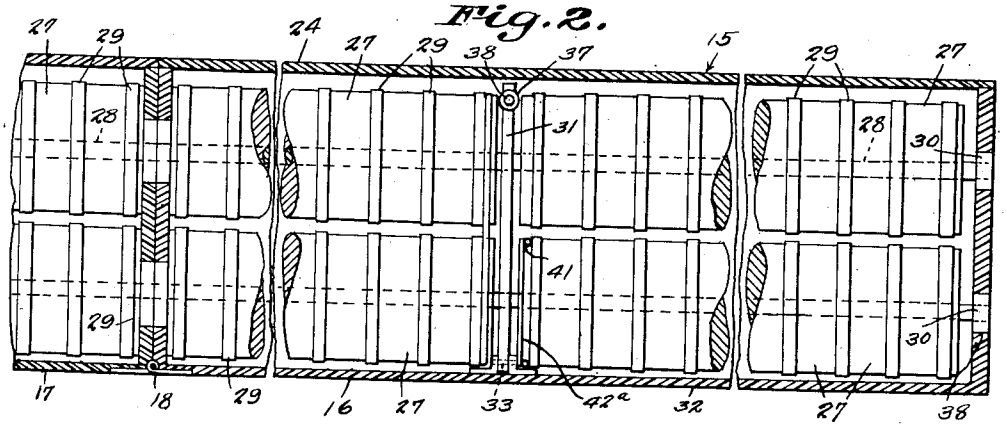

Fig. 3.

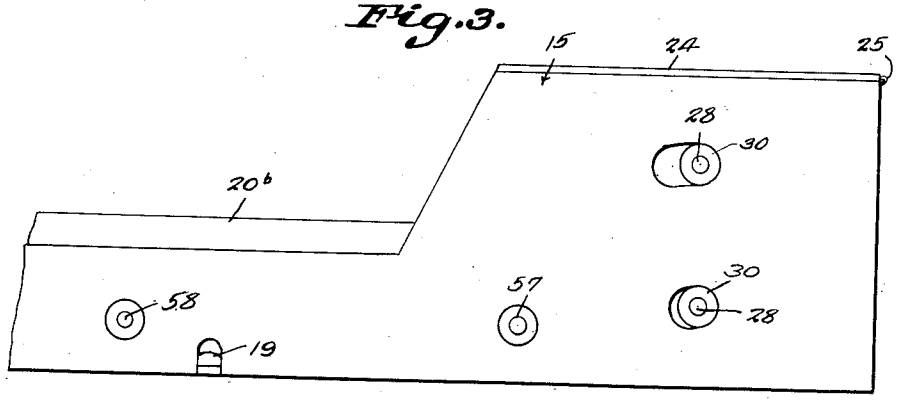

Robert J. Barone

INVENTOR

BY C. A. Snow & Co.

ATTORNEYS.

Oct. 23, 1956 R. J. BARONE 2,767,607

ELECTRIC AND PORTABLE PIANO

Filed July 27, 1953

4 Sheets-Sheet 2

Fig. 4.

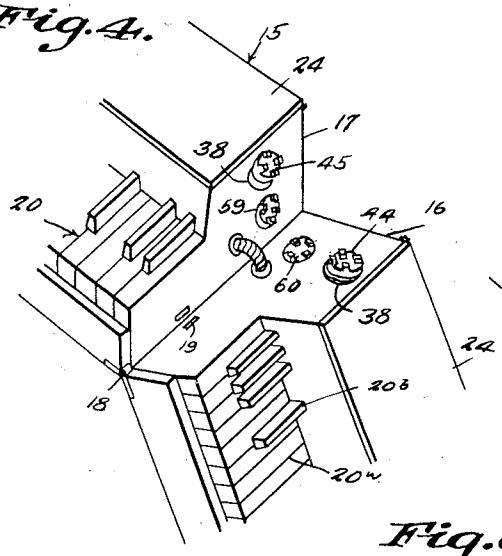

Fig. 5.

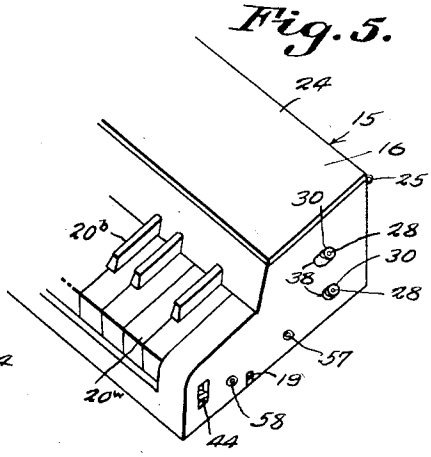

Fig. 6.

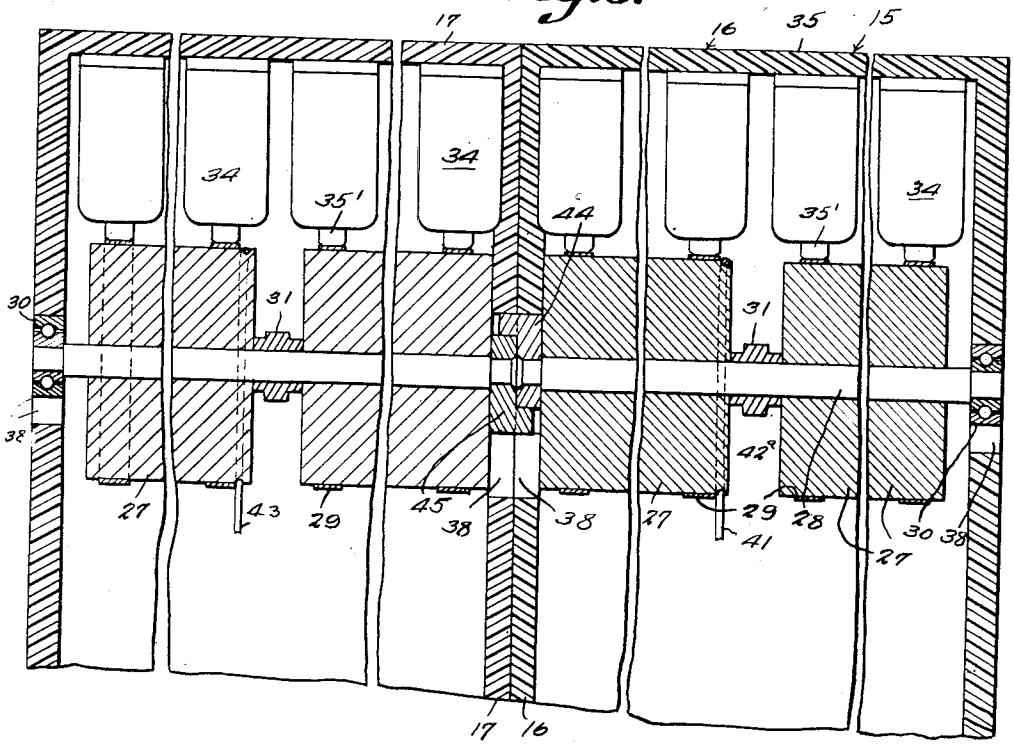

Robert J. Barone

INVENTOR

BY Cadwalader & Co.

ATTORNEYS.

Oct. 23, 1956 R. J. BARONE 2,767,607

ELECTRIC AND PORTABLE PIANO

Filed July 27, 1953 4 Sheets-Sheet 3

Fig. 7.

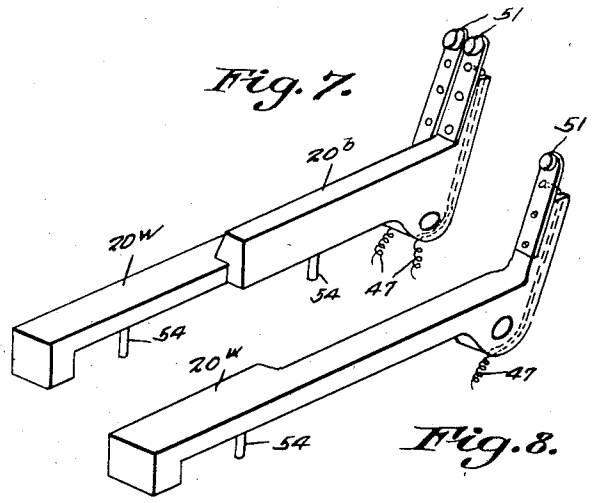

Fig. 8.

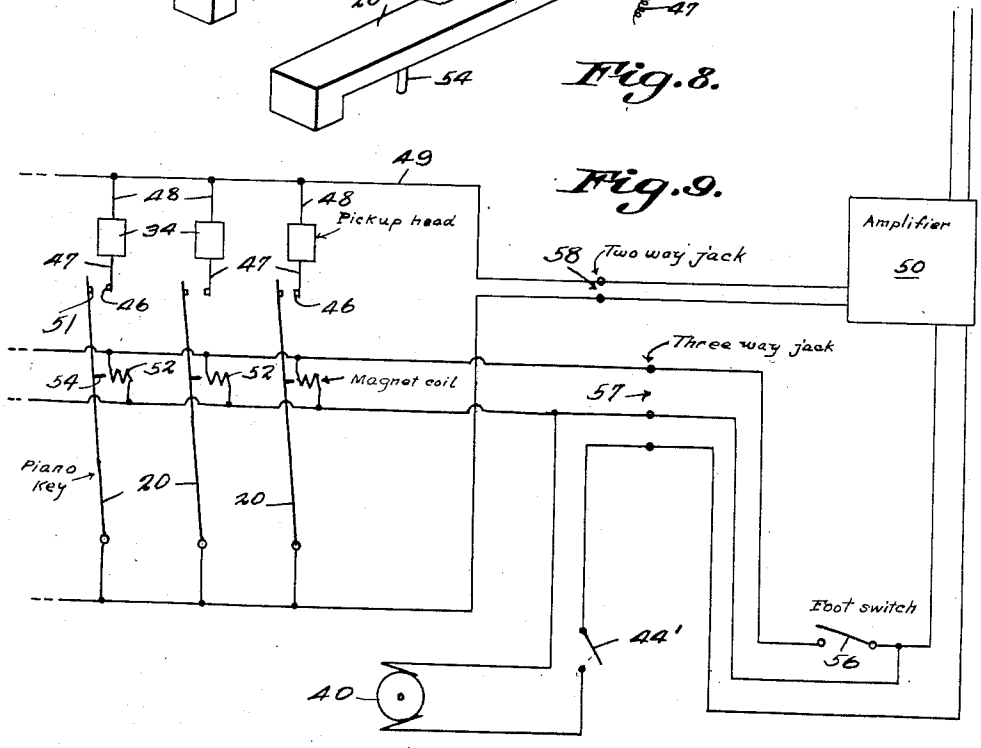

Fig. 9.

Fig. 10.

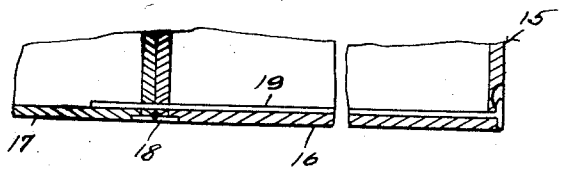

Robert J. Barone

INVENTOR

BY C. A. Snow & Co.

ATTORNEYS.

Oct. 23, 1956 R. J. BARONE 2,767,607

ELECTRIC AND PORTABLE PIANO

Filed July 27, 1953 4 Sheets-Sheet 4

Fig. 11.

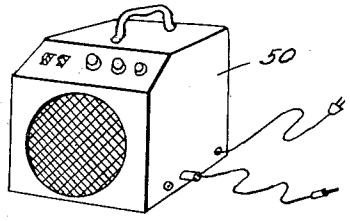

Fig. 12.

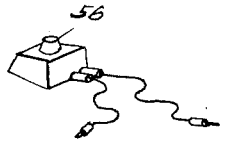

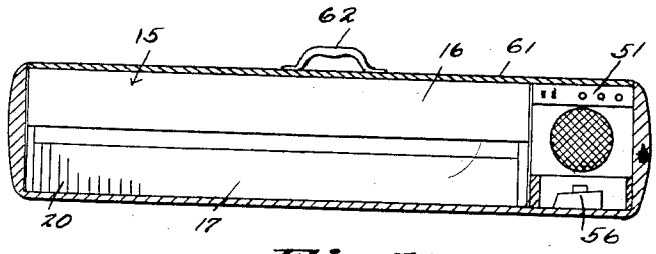

Fig. 13.

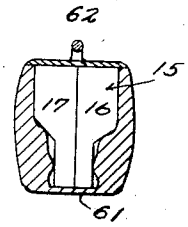

Fig. 14.

Robert J. Barone

INVENTOR

BY C. A. Snow & Co.

ATTORNEYS.

United States Patent Office 2,767,607 Patented Oct. 23, 1956

2,767,607

ELECTRIC AND PORTABLE PIANO

Robert J. Barone, Islip, N. Y.

Application July 27, 1953, Serial No. 370,284

5 Claims. (Cl. 84—1.28)

This invention relates to a portable electric piano.

It is an object of this invention to provide a portable piano which may be folded upon itself to provide for the ready transportation from one place to another.

It is another object of this invention to provide a portable piano which is provided with the same number of black and white keys as a conventional piano and electrical means is carried by the piano for producing sound exactly like the sound produced by the strings of conventional pianos.

It is another object of this invention to provide rotating wire recordings of all of the separate audible tones produced by the strings of a conventional piano and provide a separate lightweight housing of material, such as plastic or the like, which contains all of the sound producing means for connection to a proper conventional amplifier.

It is a further object of this invention to provide a lightweight, foldable, electric piano having means for connection to a suitable conventional amplifier for producing the many audible sounds and tones of a conventional stringed piano either alone or in combination with one or the many tones audible on a conventional piano.

A further object of this invention is to provide a lightweight electric piano capable of being folded into a size for ready transportation and having electric actuating means and electric tone producing means exactly like the the tones of a conventional string piano. As the weight of the electric piano producing means is far less than the weight of the action and strings of a conventional piano, the electric, folding piano may be easily folded into half the space of the conventional piano for movement to another selected location.

With the above and other objects in view, objects which may be more evident upon reading the following specification, the invention is not to be limited to the specific structure herein disclosed but may also include other structures to provide a similar folding electric piano and limited only within the spirit and scope of the appended claims.

In the drawings:

Fig. 1 is a transverse section of the folding piano partly broken away.

Fig. 2 is a longitudinal section, partly broken away.

Fig. 3 is a side elevation of one end of the piano, partly broken away.

Fig. 4 is a perspective view, partly broken away, showing the piano in its unfolded condition.

Fig. 5 is a perspective view, partly broken away of one end of the piano.

Fig. 6 is a fragmentary longitudinal sectional view, partly broken away of the piano.

Figs. 7 and 8 are perspective views of several of the keys removed from the piano.

Fig. 9 is a diagrammatic view of the wiring of the invention.

Fig. 10 is a fragmentary transverse sectional view, partly broken away, showing the connecting means for the several body sections.

Fig. 11 is a perspective view of the amplifier removed from its connection with the piano.

Fig. 12 is a perspective view of the foot pedal, removed from its connection with the invention.

Fig. 13 is a transverse sectional view of the case for the piano with the piano in its folded position.

Fig. 14 is a transverse sectional view of the folded piano in the case shown in Fig. 13.

Referring to the drawings, the numeral **15** designates generally a folding electric piano constructed according to an embodiment of the invention. The piano **15** is formed of a pair of body sections **16** and **17** connected together by a hinge **18** for folding the body sections **16** and **17** from a folded overlying position as clearly shown in Fig. 13 of the drawings to an outer, unfolded position shown in Figs. 1 and 2. The piano **15** is adapted, in its unfolded position with the piano sections **16** and **17** in their proper aligned position to have a total length similar to a conventional piano and the strings and conventional key action of the conventional piano are eliminated, the electrical means of this invention being substituted in their place. A latch key **19** is adapted to be slidably engaged in one of the piano sections for engaging the other of the sections for securing the two body sections in proper alignment so that the total length of the novel portable foldable piano will be substantially the same as the total length of a conventional piano.

A keyboard is mounted on the forward side of the body sections **16** and **17** and has the same number of keys **20** that are on the conventional keyboard. The white keys are designated in the drawings as **20W** and the black keys as **20B** located on the body sections **16** and **17** in the same relative positions that the black and white keys on a conventional piano are located.

The action of the conventional piano is eliminated in this invention and the keys **20W** and **20B** are pivotally hinged on a pin **22** which extends longitudinally of the body sections **16**, and **17**. The pivoted keys **20W** and **20B** are secured on the outer free ends of lever-like members which are pivoted intermediate their length on the hinge or pivot pin **22** and extend forwardly, of the piano. A cover member **24** is hingedly connected to the rear wall **26** by a hinge **25** for enclosing the sound producing means within the piano.

As the audible strings are not used in this piano **15**, the sound producing means is carried by a plurality of drums **27** rotatably supported in the rear section of the piano **15**. The drums **27** are rotatably mounted on shafts **28** supported in the rear portion of the piano for supporting a plurality of spaced apart taped recordings **29**. The recordings **29** are preferably of a single note or tone and are consistent throughout the length of each recording. Preferably the tone is the same as that tone produced by a certain string, or combination of strings, of a conventional piano. A bearing **30** is carried by one end of each of the shafts **28** for engagement in suitable openings in the end wall of the piano **15**. As the black and white keys **20W** and **20B** are preserved in their conventional relation to each other on the front of the piano, suitable recordings of the black and white keys will be reproduced and carried by the drums **27**, in order to preserve the relationship of the black and white keys to their proper notes and tones relationship, the notes of certain of the tones will be on drums **27** below the drums **27** having the other tones. For this reason there are provided upper and lower drums as shown in Fig. 1 of the drawings and the upper drums **27** are supported on a connecting and upwardly extending crossbar **31**. The crossbar **31** is pivotally mounted to the bottom **32** of the piano by a hinge pin **33**. Proper electric pick-up heads are securely mounted on the rear wall **35** of the piano **15**. A sound track sensitive feeler **35** is slidably mounted in each of

the pick-up heads 34 and is adapted to engage certain ones of the tapes 29. In order to maintain the drums and their tapes in proper engaging relation to the feelers 35, a spring 36 is secured between the upper ends of the bars 31 and the rear wall 35. The tension of the spring 36 may be adjusted by raising the rear cover 24 and tightening the nut 37 on a threaded pin 38 forwardly of the bar 31, the spring 36 being connected rearwardly of the bar and between the bar and rear wall 35. For rotating the drums 27 there is provided a motor 40 secured within the rear portion of the piano 15 and engaged with certain of the drums 27 as clearly shown in Fig. 1 of the drawings. A flexible belt 41 is engaged in a pulley 42*a*, carried by the motor shaft and is trained about a pulley 42 fixed to or formed integral with one of the drums 27. As only one motor 40 is provided on one side of the piano, the drums on the other side of the piano, in the other piano section 17, will be rotated in unison with the drums in the piano section 16 by way of the clutch elements 44 and 45 on adjacent drums 27 in the opposite confronting body sections 16 and 17. Teeth are formed on the clutch elements 46 and 47 for inter-engagement whereby power rotation of the drums on one side of the piano will effect rotation of the drums in the other section of the piano and still provide for separation of the two body sections about the hinge 18. Because of the pivotal movement of the connection bar 31 about the hinge pin 33 the bearing on the shaft 28 for the uppermost drums is adapted to move further than the bearing for the lowermost shaft 28 so to provide for this movement of the bearings of the shafts in the ends of the body, slots 38 are provided in the end walls of the housing. The slot 38 for the lowermost bearing extends for a short ways across the end wall of the housing and the slot for the upper bearing is considerably longer as clearly shown in Fig. 5 of the drawing to provide for this movement of the drum shaft upon tensioning the spring 36 by the nut 37. The upper drums 27 are rotated together with the lower drums 27 by a flexible belt 43 which is engaged about both the upper and lower cylinders so that upon rotation of the lower cylinders by the motor 40, the upper and lower drums will be rotated in unison.

A switch 44 is provided in the electric circuit for the motor 40 for rotating the motor continuously during the operation of the piano 15. The motor switch 44 and the handle for the latch 19 may be positioned at one end of the piano within easy reach of the hand of the person playing the piano.

A contact 46 is fixed to the front wall of the cover 34 and connected by an electric lead, as the lead 47 to the feeler head 34 at one side thereof, the other side of the pick-up head is connected by an electric lead 48 to a common lead 49 which is secured to all of the pick-up heads and may be secured to the amplifier 50. A suitable contact 51 is fixedly secured to the end of the lever carrying the keys 20 for connecting a suitable pick-up head with the amplifier. The head connected to the amplifier is associated with a specific key and the related recording so that the recording for that key will be amplified by the amplifier 50 either alone or with some other keys which have been depressed so that the one note or a plurality of notes, as in a chord, will be broadcast by the amplifier 51.

In order to hold the key 20 down to continue the length of time of the broadcasting of the note or chord a suitable magnetic core 52 is fixedly secured to the bottom wall 32 of the piano 15 and an armature 54 is fixed to the lower side of each of the keys 20 to be attracted by the core 52. Separate cores 52 are provided for each of the keys 20 whereby each of the keys may be held downwardly for sustaining a note or chord. A spring 55 is adjustably carried by the bottom wall 52 for engaging the lower surface of the key 20 continually biasing all of the keys to an upper position where they may

be reached by the fingers of a person playing the piano 15. However, the tension on the spring 55 is not enough to disengage the armature 54 from its associated core 52 until the attractive, magnetic, force of the core 52 is broken by disconnecting the core 52 from the source of electric power. When it is desired to sustain a note or chord for any length of time, a foot switch 56 is connected to the magnetic coils 52 so that the magnetic coils 52 may sustain the attraction of their respective armatures of the selected keys 20 when the force exerted by the finger of a player is relieved from that key. By maintaining the foot on the switch 56, the tone of the selected key, or keys, will be sustained as the amplifier 50 will broadcast and amplify the tone of the selected tape recordings 29 until foot pressure is relieved from the foot switch 56.

The motor 40 is continuously connected to the source of electric supply regardless of the position of the foot switch, as long as the motor switch 44 is closed. The amplifier will be connected to the pick-up heads either by the foot switch alone or by the engagement of the contacts 46, fixed on the body 15 and the contact 23 which is pivotally carried by each of the keys 20. Suitable leads may be extended through a two way contact 58 from the pick-up heads and keys to the amplifier and another three way jack 57 may be provided for the leading up to the magnetic coils 52 and the motor 40.

Suitable clutch elements 59 and 60 are fixedly carried by the engaging ends of the drum shaft 28 in alignment with the engaging end walls of the body sections 16 and 17 to provide for the proper rotation of the drums 27 remote from the motor 40.

When it is desired to move the piano 15 from one place to another, the piano body sections 16 and 17 may be folded into overlying position relative to each other about the hinge 18 and is then enclosed in a suitable leather casing 61 having a supporting or carrying handle 62 fixedly mounted thereon.

Having thus particularly described one form of this invention, what is sought to be protected by Letters Patent is:

1. A folding electric piano comprising a pair of bodies open at the upper side hingedly connected together at one end thereof, inter-engaging fastening means on each of said pair of bodies securing said bodies in flat, unfolded relation to each other, rotatable drums in each of said bodies, a plurality of electrical sound producing recording tape on said drums, sound recording electric pick-up heads engaging each of said tapes, a plurality of keys pivotally mounted on the upper open side of said bodies, a cover over a portion of said bodies, a plurality of electric contacts on said cover, an electric contact on each of said keys engageable with a contact on said cover, a sound amplifier connected to said pick-up head for amplifying the sound of a pair of engaged contacts on said cover and selected ones of said keys, and means for rotating said drums.

2. In a folding electric piano comprising a pair of body sections open along their upper side hingedly connected together at one end thereof, inter-engaging fastening means on each of said body sections for securing said sections together in unfolded, flat, aligned relation to each other, rotatable drums in each of said body sections, a plurality of electric sound producing tapes on said drums, a plurality of electric pick-up heads on each of said body sections, each of said heads engaging a sound producing tape, a plurality of keys pivotally mounted in each of said body sections, electric contacts fixed on each of said body sections, electric contacts on each of said keys engageable with a contact on said body sections, an electric sound amplifier connected to said contacts for reproducing the tones of selected tapes, an electric motor connected to said drums for rotating said drums.

3. An electric piano of the kind described comprising a

body, a plurality of rotatable drums in said body, an electric motor in said body operatively connected to said drums for rotation thereof, a plurality of sound reproducing tapes on each of said drums, a plurality of keys pivotally mounted on said body, a plurality of electric sound pick-up heads fixedly mounted on said body, each of said pick-up heads engaging separate ones of said tapes, a plurality of electric contacts fixed on said body, an electric contact fixed on each of said keys engageable with one of the contacts fixed on said body upon pivoting of said key, an electric coil adjacent each of said keys, an electric armature on each of said keys and cooperating with one of said coils for holding a selected key and its related contacts in engagement, a switch for said electric coils, an electric sound amplifier connected to said contacts for electrically reproducing and amplifying the tones from said pick-up head while said contacts are closed.

4. A foldable electric piano comprising a pair of body sections hingedly connected together to form in the extended position thereof a complete body, inter-engaging latch means on each of said body sections engageable with the other body section for securing said body sections together, a plurality of rotatable drums in said body, an electric motor in said body and operatively connected to said drums for the rotation thereof, a plurality of sound re-producing tapes on each of said drums, a plurality of keys pivotally mounted on said body, a plurality of electric sound pick-up heads fixedly mounted on said body, each of said pick-up heads engaging a separate one of said tapes, a plurality of electric contacts fixed on said body, an electric contact fixed on each of said keys engageable with one of said contacts fixed on said body upon pivoting of a selected key, an electric coil adjacent each of said keys, an electric armature on each of said keys and cooperating with one of said coils for holding said selected key and its related contact in engagement,

a switch for said electric coils, an electric sound amplifier connected to said contacts for electrically reproducing and amplifying the tones from said pick-up heads while said contacts are closed.

5. A folding electric piano comprising a pair of body sections hingedly connected together, a slidable latch key in one of said body sections, the other of said body sections being formed with a recess for receiving an end of said latch key for securing said body sections in aligned position, a plurality of rotatable drums in each of said body sections, means for rotating said drums, a plurality of sound re-producing tapes on each of said drums, a plurality of keys pivotally mounted on each of said body sections for pivotal movement about a horizontal axis, a plurality of sound pick-up heads fixedly mounted in each of said body sections and each of said heads engaging a separate one of said tapes, a plurality of electric contacts fixed on each of said bodies, an electric contact fixed on each of said keys engageable with one of the contacts fixed on said body section upon pivoting of a selected key, an electric sound amplifier connected to said contacts for electrically reproducing and amplifying tones from said selected pick-up heads, a plurality of electric coils fixed on said body sections adjacent each of said keys, an armature for each of said coils fixed on said keys for holding selected keys and their related contacts and sound heads in engagement while the armature is held by its related coil, electric leads connecting said pick-up heads to said amplifier and said contact for connecting said coils to said amplifier.

References Cited in the file of this patent

UNITED STATES PATENTS

2,199,948	Brockaway	May 7, 1940
2,487,420	Brown	Nov. 8, 1949