(12) INTERNATIONAL APPLICATION PUBLISHED UNDER THE PATENT COOPERATION TREATY (PCT)

(19) World Intellectual Property Organization
International Bureau

(43) International Publication Date
26 February 2004 (26.02.2004)

PCT

(10) International Publication Number
WO 2004/017492 A1

(51) International Patent Classification[7]: H02K 3/50, 3/40

(21) International Application Number:
PCT/CH2003/000514

(22) International Filing Date: 28 July 2003 (28.07.2003)

(25) Filing Language: English

(26) Publication Language: English

(30) Priority Data:
0202457-8 19 August 2002 (19.08.2002) SE

(71) Applicant *(for all designated States except US)*: **ALSTOM (SWITZERLAND) LTD** [CH/CH]; Brown Boveri Strasse 7, CH-5401 Baden (CH).

(72) Inventor; and

(75) Inventor/Applicant *(for US only)*: **LUNDEBERG, Olof** [SE/SE]; Stigbergsgatan 27, S-723 41 Västeras (SE).

(74) Common Representative: **ALSTOM (SWITZERLAND) LTD**; CHSP Intellectual Property, Brown Boveri Str. 7/699/5, CH-5401 Baden (CH).

(81) Designated States *(national)*: AE, AG, AL, AM, AT, AU, AZ, BA, BB, BG, BR, BY, BZ, CA, CH, CN, CO, CR, CU, CZ, DE, DK, DM, DZ, EC, EE, ES, FI, GB, GD, GE, GH, GM, HR, HU, ID, IL, IN, IS, JP, KE, KG, KP, KR, KZ, LC, LK, LR, LS, LT, LU, LV, MA, MD, MG, MK, MN, MW, MX, MZ, NI, NO, NZ, OM, PG, PH, PL, PT, RO, RU, SC, SD, SE, SG, SK, SL, SY, TJ, TM, TN, TR, TT, TZ, UA, UG, US, UZ, VC, VN, YU, ZA, ZM, ZW.

(84) Designated States *(regional)*: ARIPO patent (GH, GM, KE, LS, MW, MZ, SD, SL, SZ, TZ, UG, ZM, ZW), Eurasian patent (AM, AZ, BY, KG, KZ, MD, RU, TJ, TM), European patent (AT, BE, BG, CH, CY, CZ, DE, DK, EE, ES, FI, FR, GB, GR, HU, IE, IT, LU, MC, NL, PT, RO, SE, SI, SK, TR), OAPI patent (BF, BJ, CF, CG, CI, CM, GA, GN, GQ, GW, ML, MR, NE, SN, TD, TG).

Published:
— *with international search report*

[Continued on next page]

(54) **Title:** CABLE PROTECTING DEVICE AND USE AT A STATOR OF A HIGH VOLTAGE GENERATOR

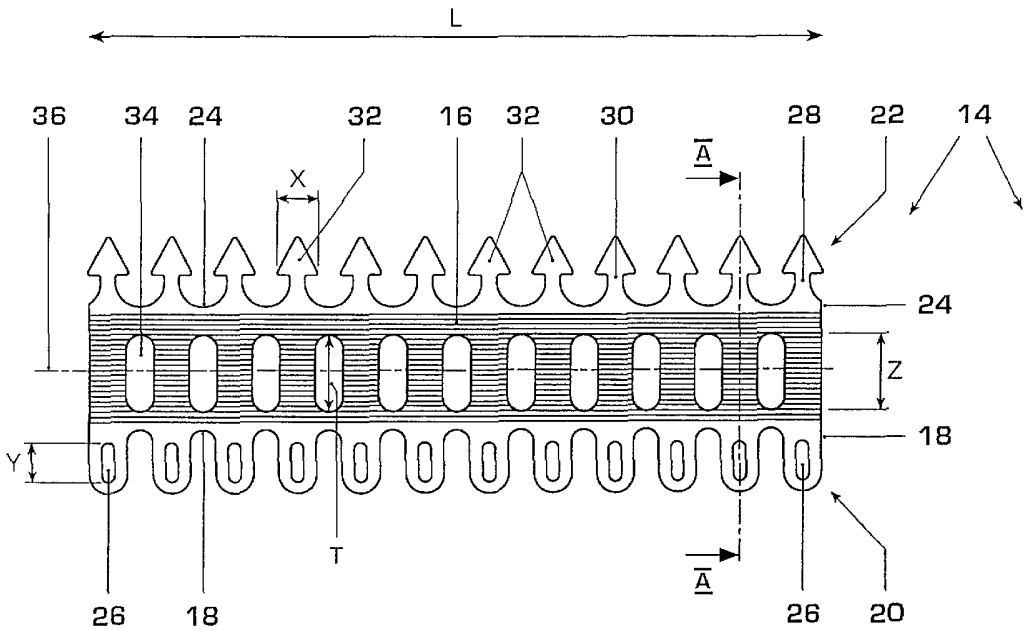

(57) **Abstract:** The present invention relates to a device (14) for protecting individual high voltage cables (4) at a stator (2) of a high voltage generator. The device comprises an elongated body (16) of foldable material provided with several first connection members (20) along one side (18) and several second connection members (22) along another opposite side (24), the elongated body being foldable around a cable (4) and locked by interconnection of the first and second connection members (20, 22). The present invention also relates to a use of a device (14) for protecting cables (4) at a stator (2) of a high voltage generator.

WO 2004/017492 A1

For two-letter codes and other abbreviations, refer to the "Guidance Notes on Codes and Abbreviations" appearing at the beginning of each regular issue of the PCT Gazette.

CABLE PROTECTING DEVICE AND USE AT A STATOR OF A HIGH VOLTAGE GENERATOR

Technical field

The present invention relates to a device for protecting individual high voltage cables arranged at a stator of a high voltage generator. The present invention also relates to a use of a device for protecting cables of high voltage cables at a stator of a high voltage generator.

Background

Powerformer™ is a new concept for high voltage generators and has resulted in a revolution in the field of power generation. High voltage generators based on Powerformer™ technology uses high voltage cables as the stator winding instead of the traditional medium voltage stator bars which are used in stators of conventional generators. Pluralities of cables are arranged in parallel throughout the stator core in the longitudinal direction. A rotor is arranged centrally in the generator and is surrounded by the stator. An air gap is provided around the rotor adjacent the surrounding stator, such that the rotor is allowed to freely rotate and that the rotor can be easily assembled or disassembled. At both ends of the stator, cables are protruding out from the side of the stator core. Each cable comes out from the side of the stator end at one position on the stator radius. Each cable is then curved outside, forming a cable arc on the side of the stator and introduced back again at another position on the stator radius.

The magnetic field created by the rotor of the generator produces forces, such as attractive and tractive forces, on the core of the stator. The forces causes deformation of the stator core that follows the rotation of the rotor during operation and causes resulting cyclical vibrations that propagate through the entire generator, including the cables and the support structure of the generator. Due to the large amount of cables, each cable

arranged close to an adjacent cable.

Vibrations in a Powerformer™ generator are transmitted to the cables. If the cables are not isolated from each other, the vibrations may result in wear on the cables because of the close contact with neighbouring cables. In addition, the cables also have to be kept apart since electrical disturbances may occur between cables that are in close contact. The cables outer semi-conducting layer, respectively, shall not be allowed to have direct contact.

Moreover, during the operational lifetime of the generator, electrical disturbances, such as a short circuit, may occur and then result in an instant pulse that is 10-15 times larger than the normal load on the generator. Hence, consideration should also be taken to such instant pulses for the support of the cables.

The traditional way to avoid the wearing and the electrical disturbances between adjacent cables is to support the cable arcs individually and attach them to the stator frame. At several positions along the cable, where possible intersection may occur with other cables, individual cables are provided with a hose pipe of silicon arranged on the cables in order to avoid a direct contact between the neighbouring cables. Hitherto, a hose pipe has been used, i.e. a piece of a tubing, which is slitted along one side to make it possible to put it on loosely around the cable. However, creases are formed on the hose pipes when a neighbouring cable slides against the hose pipe. In addition, air may easily be trapped in air pockets, on the inside between the cable and the hose pipe due to occurring creases on the hose pipe. Hence, ventilation of heat from the cable is usually poor.

Description of the invention

The object of the present invention is to minimise the wearing of the cables and to prevent electrical disturbances between cables arranged at a high voltage generator. Another object of the present invention is to provide a device, protecting the circumference of the cables, which is easy and fast to assemble to cables in a high voltage generator, and further cost efficient and uncomplicated to produce. A further object is to avoid creases to occur on the protecting device when arranged on cables and to avoid air being trapped in between such a protecting device and the cable.

Accordingly, in accordance with the present invention, there is provided a device for protecting individual high voltage cables at a stator of a high voltage generator, in that the device comprises an elongated body of flexible material provided with several first connection members along one side and several second connection members along another opposite side, the elongated body being foldable around a cable and locked by interconnection of the first and second connection members.

The device according to the present invention provides that adjacent arranged cable arcs accomplish that a neighbouring intersecting cable, is not permitted to come in direct contact, and thus the wearing on the cables as well as electrical disturbances can be avoided. The locking interconnection between the first and second connection members makes it possible to achieve a secure and tight protecting casing on the cable, whereby creases and occurrence of air pockets can be avoided. Moreover, the device according to the present invention also facilitates for a faster and easier way to protect the cables during assembly of the generator. The erection time can be reduced significantly compared to the previous procedures.

The device according to the present invention is made of a foldable material, which makes it possible to fold around a

cable. Suitably at least parts of the device is of a flexible material such as a plastic. Preferably at least parts of the device, or most preferably the whole device, is made of an elastic material, such as silicon or the like. The advantage by using a flexible, or preferably elastic, material is that the outer surface of the device can be allowed to shear when it comes in contact with an adjacent cable.

Preferably, the first and second connection members are evenly spread and protruding from the opposite sides of the elongated body. In order to provide for a secure and rigid interconnection of the first and second connection members, each of first connection members can be provided with an opening. The second connection members is suitably provided with a tapered waist portion which towards the outermost part ends up in a head. Thus, each opening at the first connection projecting members, respectively, is adapted to receive each head of the second connection projecting members to form a locking interconnection.

According to one preferred embodiment, the elongated body is provided with apertures in order to provide for ventilation of heat that arises from the cable. For the purpose to reach a sufficient ventilation of heat, it is suitable that there is a plurality of apertures that are arranged at the centre the elongated body along its longitudinal extension. Further, the apertures has suitably a longitudinal extension in a direction transverse to the longitudinal extension of the elongated body, towards the sides, respectively, of the elongated body. The apertures may propagating over substantially along the whole transverse direction of the elongated body to secure adequate ventilation of heat.

Suitably, the surface of the elongated body can be provided with grooves.

The present invention also relates to a use of a device for protecting cables as disclosed above, according to the main

claim 1 and the independent claims dependent on claim 1, for a high voltage generator.

Brief description of the drawings

Embodiments of the present invention are hereinafter described more in detail, with reference to the accompanying drawings, bearing in mind however that the scope of protection of the present invention is indicated by the independent appended claims and not limited to the specific illustrative embodiments, in which drawings:

fig. 1 illustrate in a partial side view pluralities of cable arcs bent on the outside of a stator,

fig. 2 shows in a schematic top view the side of a high voltage generator,

fig. 3A illustrate in a top plan view a device for protecting individual cables,

fig. 3B shows a cross sectional view along line A-A in fig. 3A, and

fig. 4 a schematic side view of pluralities of cable arcs bent on the outside of a stator provided with the protecting device.

Detailed description of the invention

Fig. 1 illustrates generally pluralities of cable arcs bent at the outside of a stator core 2 of a Powerformer™ high voltage generator. Pluralities of high voltage cables 4 are arranged as the stator winding in parallel throughout the stator core 2 in its longitudinal direction 6 and in parallel to a centrally positioned rotor 7 (shown in fig. 2) surrounded by the stator core. At each short end side 8 of the stator, around its perimeter, cables 4 form so called cable end windings, e.g. bundles of cables arranged at the side of the stator. Each cable

4 comes out from the side 8 of the stator short end at one position along the stator radius R. Each cable 4 is curved outside the side of the stator and introduced back again at another position on the stator radius R, thus forming so called cable arcs 10.

Fig. 2 shows a survey view the side of a high voltage hydro power plant generator 12, in which the device of the present invention has been utilised for protecting individual cables.

Figs. 3A-3B shows a device 14 for protecting cables 4 according to the present invention. The device 14 comprises an elongated body 16 having a longitudinal extension L. At one end 18, the elongated body 16 of foldable material is provided with several first connection members 20 along said one side 18, and several second connection members 22 along another opposite side 24. The elongated body 16 is being foldable around a cable 4 (see fig. 4) and locked by interconnection of the first and second connection members 20, 22. The first and second connection members 20, 22 are evenly spread and protruding from the opposite sides 18, 24 of the elongated body 16. Each of first connection members 20 is provided with an opening 26, and each of the second connection members 22 is provided with a tapered waist portion 28 which towards the outermost part 30 ends up in a head 32. The extension X of the head 32 has suitably about same, or slightly shorter, extension Y of the longitudinal extension T of the opening 26, such that the head 32 can pass through the opening 26.

The head 32 may have the shape of a knob, an arrow (as shown in fig. 3A) or the like. For a locking interconnection with opening 26, the head 32 is passed entirely through the opening 26, such that the tapered waist portion 28 is arranged in the opening, whereby locking is formed, when the elongated body 16 is arranged as a protecting casing around the circumference of the cable 4 (see fig. 4 below). Suitably at least the tapered waist portion 28 is of a flexible, or elastic,

material. In that case it is possible that the head in its initial position has an extension X in a direction transverse the longitudinal extension Y of the opening 26. When the head 32 should be passed through the opening 26, it is then possible to turn the head from its initial position, such that the tapered waist portion 28 is twisted. Then the head 32 is passed through the opening 26. Subsequently, the head 32 is returned to its initial position, due to the inherent flexibility, or elasticity, of the waist portion, to a direction transverse X compared to the longitudinal extension Y of the opening 26.

As further shown in the embodiment in figs. 3A-3B, the elongated body of the device according to the present invention can be provided with apertures 34. As evident from fig. 3A, a plurality of apertures 34 may be arranged along the centre 36 the elongated body 16, evenly spread, as shown in fig. 3A along its longitudinal extension. The apertures 34 may be extended in a direction transverse Z compared to the longitudinal extension L of the elongated body 16, towards the sides 18, 24, respectively, of the elongated body. The apertures 34 are propagating over substantially along the whole transverse extension T of the elongated body 16. The circumference of a cable 4, around which the device 14 should be folded as a protective casing, should preferably have substantially about the same length as the transverse extension T of the elongated body 16.

Moreover, as evident from in figs. 3A-3B, the surface 38 of the elongated body can be provided with grooves 40, preferably at the centre 36 of the elongated body 16.

Fig. 4 illustrates device 14 arranged around neighbouring cables 4, locked at the cables by interconnection of the first and second connection members 20, 22.

List of references

2	stator core
4	high voltage cables
6	longitudinal direction of stator core
7	rotor
8	short end side of stator core
10	cable arcs
12	high voltage hydro power plant generator
14	device for protecting cables
16	elongated body
18, 24	sides of elongated body
20	first connection members
22	second connection members
26	opening
28	tapered waist portion
30	outermost part
32	head
34	apertures
36	centre of elongated body
38	surface of elongated body
40	grooves
L	longitudinal extension of elongated body
R	stator radius
T	transverse extension of elongated body
X	extension of head
Y	longitudinal extension of opening
Z	transverse direction

Claims

1. Device (14) for protecting individual high voltage cables (4) at a stator (2) of a high voltage generator, **characterised by** an elongated body (16) of foldable material provided with several first connection members (20) along one side (18) and several second connection members (22) along another opposite side (24), the elongated body being foldable around a cable (4) and locked by interconnection of the first and second connection members (20, 22).

2. Device according to claim 1, **characterised in** that the first and second connection members (20, 22) are evenly spread and protruding from the opposite sides (18, 24) of the elongated body (16).

3. Device according to claim 2, **characterised in** that each of first connection members (20) is provided with an opening (26), and each of the second connection members (22) is provided with a tapered waist portion (28) which towards the outermost part (30) ends up in a head (32).

4. Device according to claim 3, **characterised in** that the extension (X) of the head (32) is slightly shorter than the longitudinal extension (Y) of the opening (26).

5. Device according to any of the preceding claims, **characterised in** that the elongated body (16) is provided with apertures (34).

6. Device according to claim 5, **characterised in** that there is a plurality of apertures (34) that are arranged at the centre (36) the elongated body along its longitudinal extension (L).

7. Device according to claim 6, **characterised in** that the apertures (34) are extended in a direction transverse (T) to the longitudinal extension (L) of the elongated body (16), towards the sides (18, 24), respectively, of the elongated body.

8. Device according to claim 7, **characterised in** that the apertures (34) are propagating over substantially along the whole transverse direction (T) of the elongated body (16).

9. Device according to any of the preceding claims, **characterised in** that the surface (38) of the elongated body is provided with grooves (40).

10. Use of the device (14) according to any of claims 1-9, for protecting cables (4) at a stator (2) of a high voltage generator.

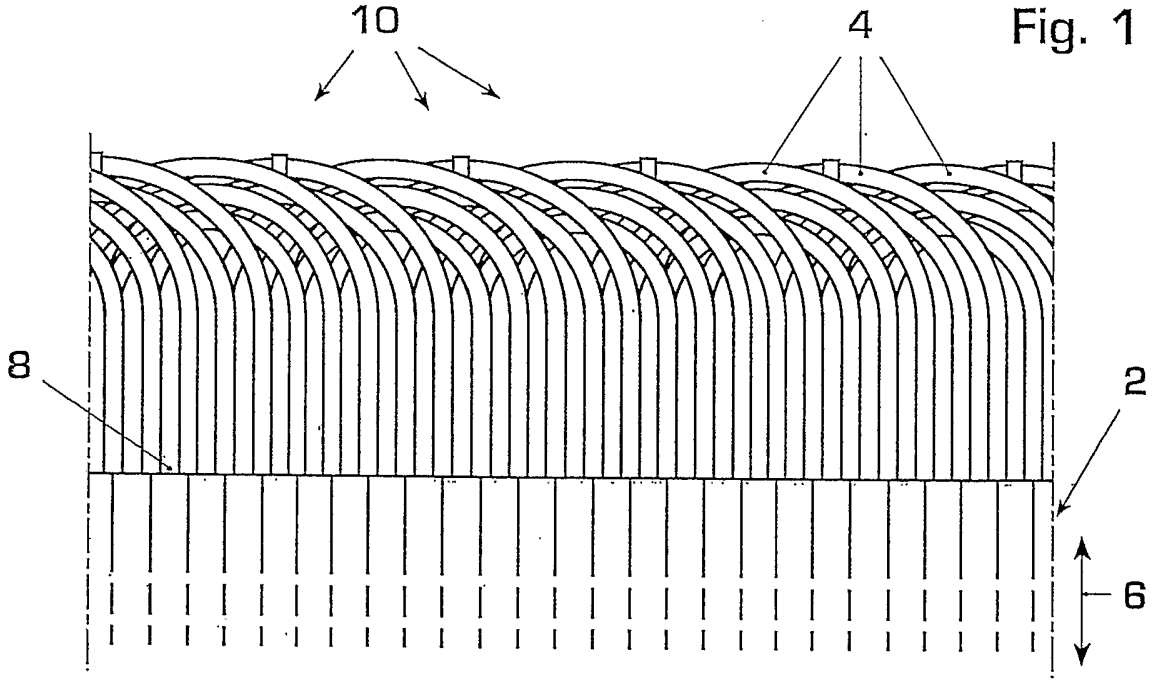

Fig. 1

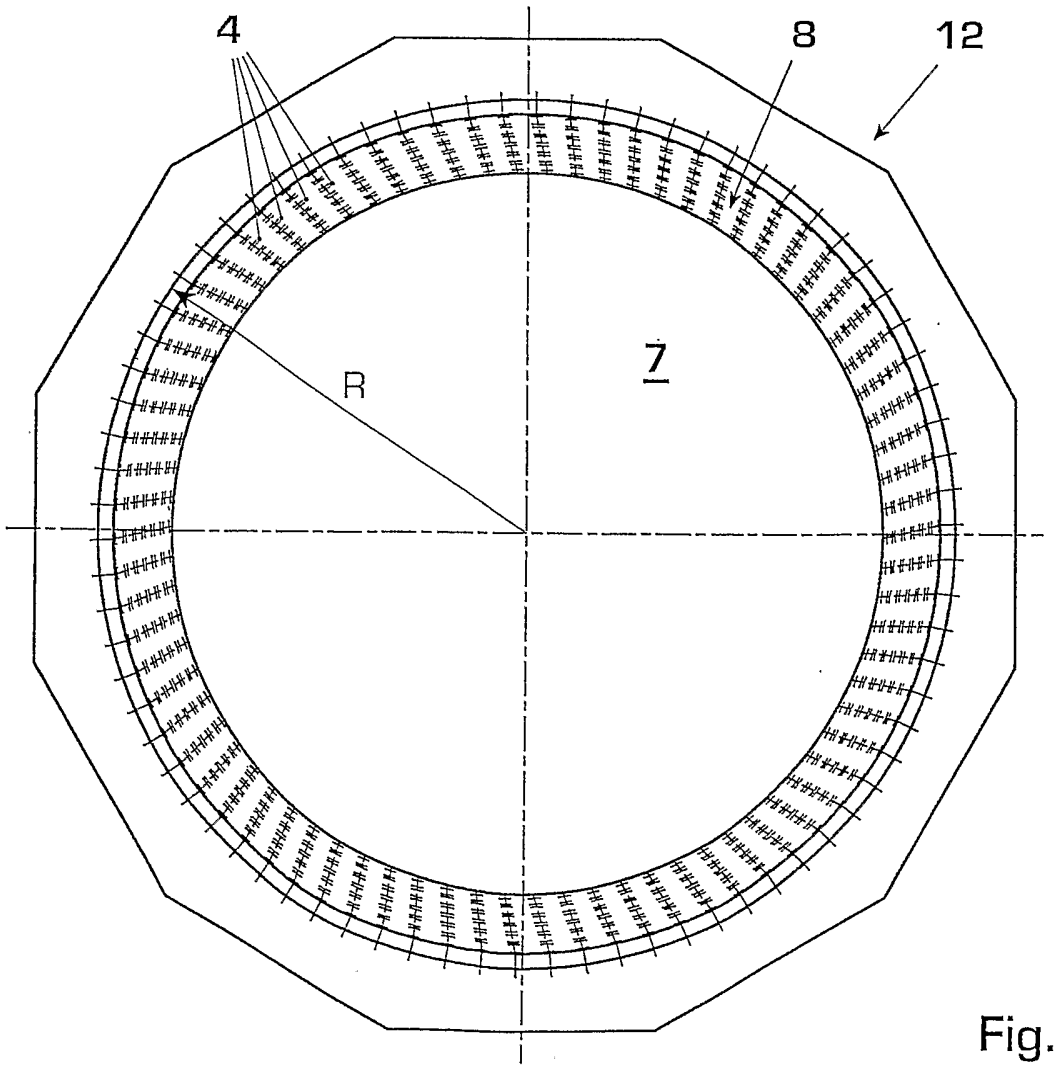

Fig. 2

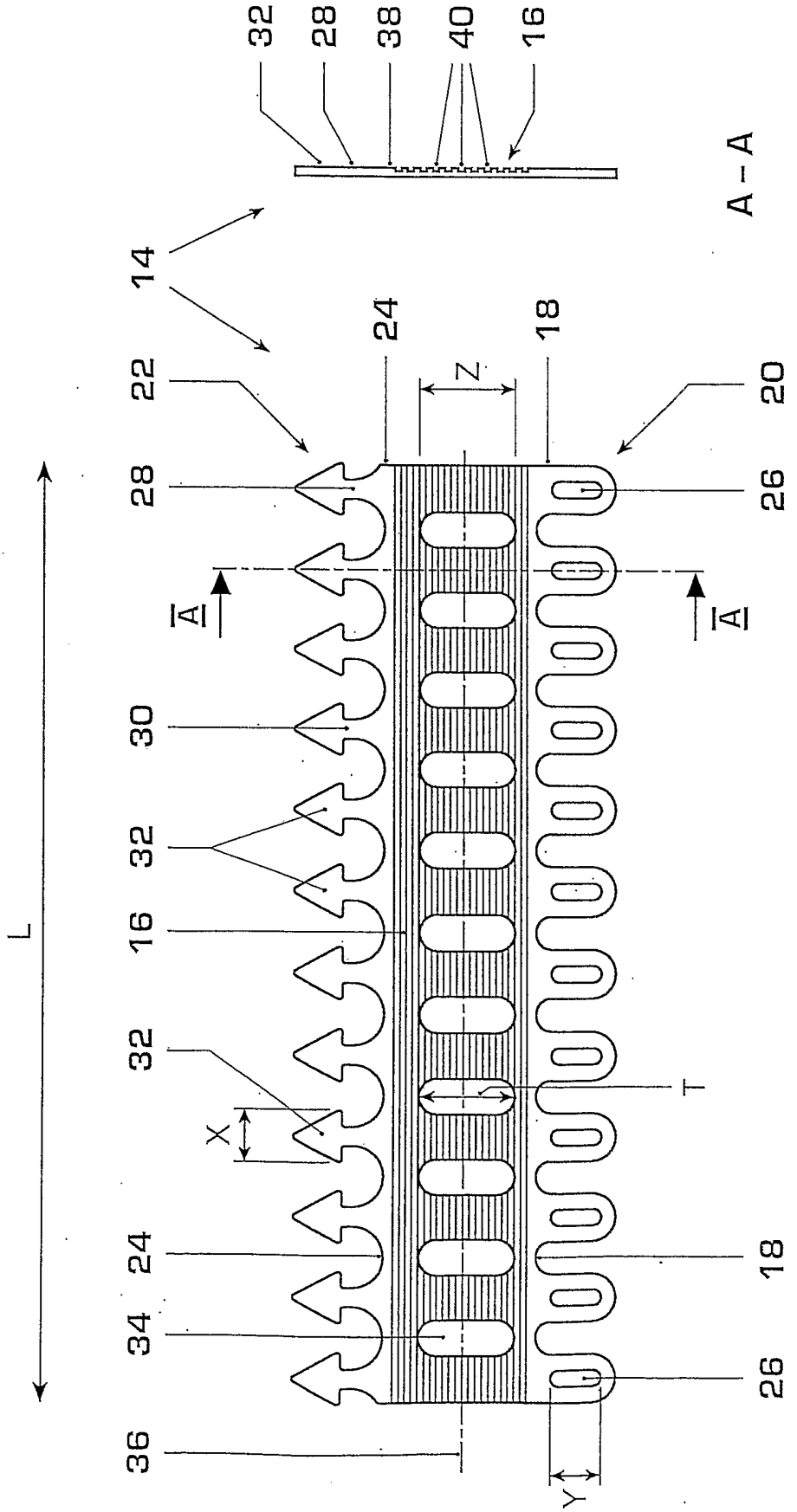
32
28
38
40
16
A – A
14
24
18
22
Z
20
28
26
A
A
30
32
16
L
32
X
T
24
18
34
26
36
Y

Fig. 3B

Fig. 3A

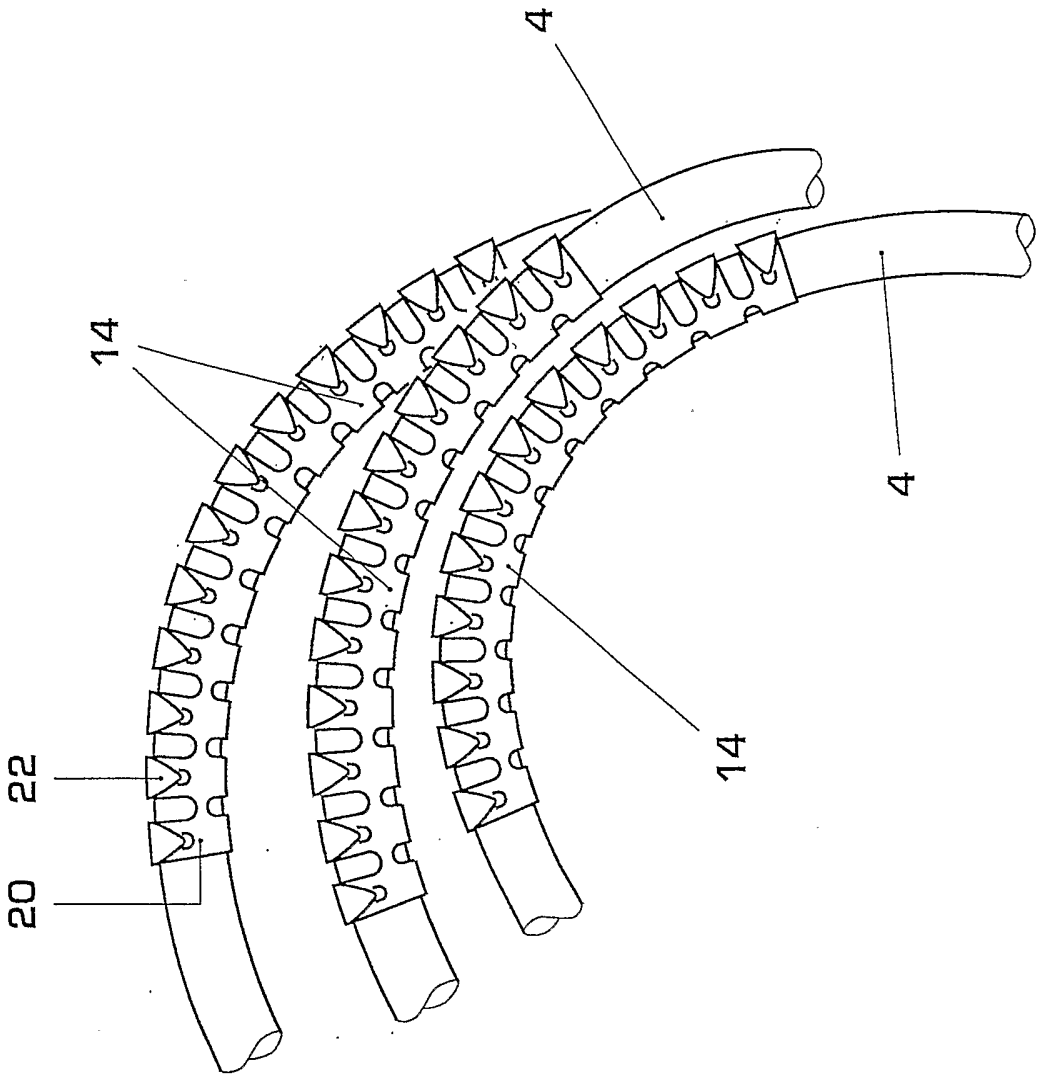

Fig. 4

INTERNATIONAL SEARCH REPORT

[redacted]onal Application No
PCT/CH 03/00514

A. CLASSIFICATION OF SUBJECT MATTER
IPC 7 H02K3/50 H02K3/40

According to International Patent Classification (IPC) or to both national classification and IPC

B. FIELDS SEARCHED

Minimum documentation searched (classification system followed by classification symbols)
IPC 7 H02K

Documentation searched other than minimum documentation to the extent that such documents are included in the fields searched

Electronic data base consulted during the international search (name of data base and, where practical, search terms used)
EPO-Internal, WPI Data, PAJ

C. DOCUMENTS CONSIDERED TO BE RELEVANT

Category °	Citation of document, with indication, where appropriate, of the relevant passages	Relevant to claim No.
A	WO 98 34326 A (ASEA BROWN BOVERI AB) 6 August 1998 (1998-08-06) abstract page 7, line 10 -page 9, line 7; figures 1-5	1
P,A	US 2003/006662 A1 (CARSTENSEN ET AL.) 9 January 2003 (2003-01-09) abstract page 2, paragraphs 24-28; figures 2-4	1
A	& WO 98 20597 A (ASEA BROWN BOVERI AB) 14 May 1998 (1998-05-14)	1

☐ Further documents are listed in the continuation of box C.

☒ Patent family members are listed in annex.

° Special categories of cited documents :

"A" document defining the general state of the art which is not considered to be of particular relevance

"E" earlier document but published on or after the international filing date

"L" document which may throw doubts on priority claim(s) or which is cited to establish the publication date of another citation or other special reason (as specified)

"O" document referring to an oral disclosure, use, exhibition or other means

"P" document published prior to the international filing date but later than the priority date claimed

"T" later document published after the international filing date or priority date and not in conflict with the application but cited to understand the principle or theory underlying the invention

"X" document of particular relevance; the claimed invention cannot be considered novel or cannot be considered to involve an inventive step when the document is taken alone

"Y" document of particular relevance; the claimed invention cannot be considered to involve an inventive step when the document is combined with one or more other such documents, such combination being obvious to a person skilled in the art.

"&" document member of the same patent family

Date of the actual completion of the international search	Date of mailing of the international search report
7 October 2003	14/10/2003

Name and mailing address of the ISA	Authorized officer
European Patent Office, P.B. 5818 Patentlaan 2 NL – 2280 HV Rijswijk Tel. (+31–70) 340–2040, Tx. 31 651 epo nl, Fax: (+31–70) 340–3016	Beitner, M

INTERNATIONAL SEARCH REPORT

Information on patent family members

[redacted]nal Application No
PCT/CH 03/00514

Patent document cited in search report	Publication date	Patent family member(s)	Publication date
WO 9834326 A	06-08-1998	AU 5891798 A	25-08-1998
		BR 9709473 A	11-01-2000
		BR 9807152 A	25-04-2000
		CN 1246979 T	08-03-2000
		EP 0956635 A2	17-11-1999
		JP 2001510013 T	24-07-2001
		NZ 337071 A	25-05-2001
		PL 334862 A1	27-03-2000
		WO 9834326 A2	06-08-1998
US 2003006662 A1	09-01-2003	SE 507830 C2	20-07-1998
		AU 4973597 A	29-05-1998
		EP 0935838 A1	18-08-1999
		JP 2001503596 T	13-03-2001
		SE 9604033 A	05-05-1998
		WO 9820597 A1	14-05-1998