E. FULDA.

PROCESS OF MAKING METALLIC FABRIC.

APPLICATION FILED MAY 4, 1911.

1,174,137. Patented Mar. 7, 1916.

Fig. 1.

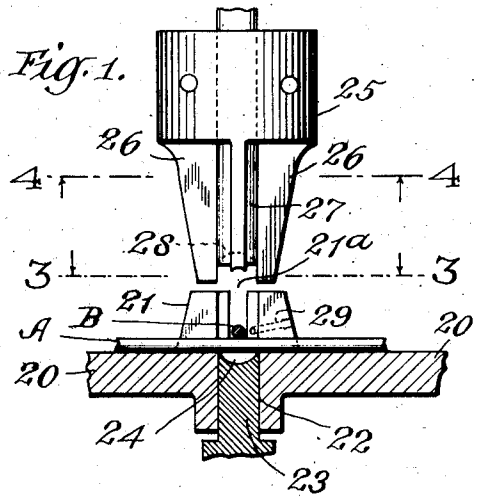

Fig. 2.

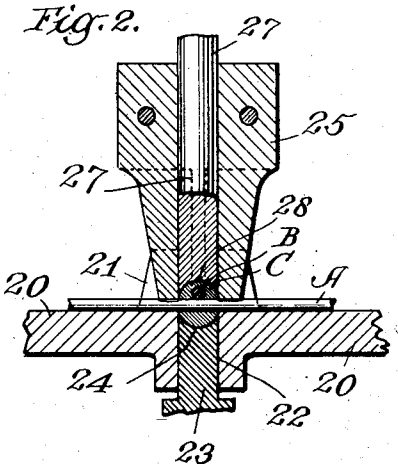

Fig. 3.

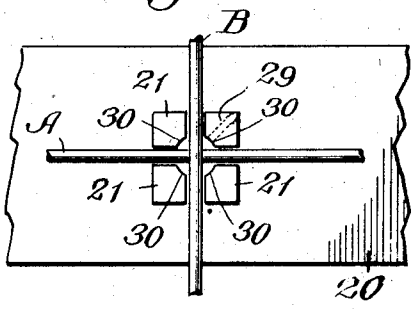

Fig. 4.

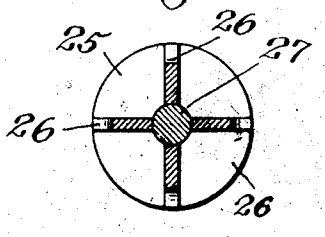

Fig. 5.

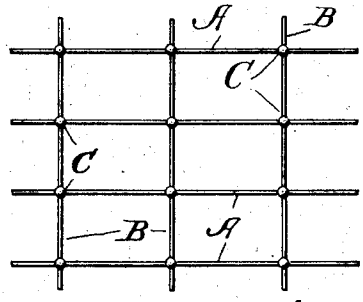

Fig. 9.

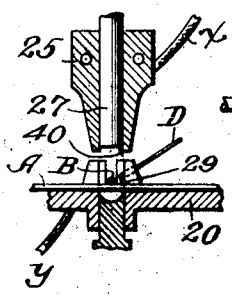

Fig. 6.

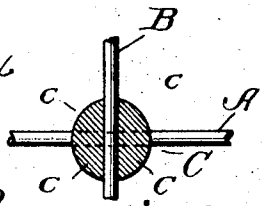

Fig. 7.

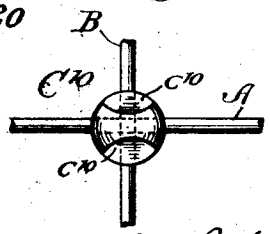

Fig. 8.

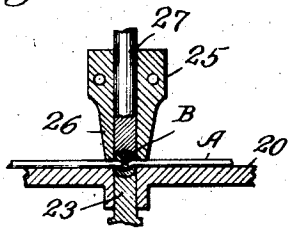

WITNESSES

L. Richards

Jos. J. Kavanagh

INVENTOR

E. Fulda

BY Wm. A. Megrath

ATTORNEY

UNITED STATES PATENT OFFICE.

EDWARD FULDA, OF NEW YORK, N. Y.

PROCESS OF MAKING METALLIC FABRIC.

1,174,137. Specification of Letters Patent. Patented Mar. 7, 1916.

Application filed May 4, 1911. Serial No. 624,929.

To all whom it may concern:

Be it known that I, EDWARD FULDA, a citizen of the United States, and a resident of the city, county, and State of New York, have invented certain new and useful Improvements in Processes of Making Metallic Fabric, of which the following is a specification.

This invention relates to a process of making metal fabric, for fences and other uses, comprising intersecting members whose joints are provided with binders.

One of the important objects of the present invention is to provide a process by which such fabric may be economically produced.

This and other objects which will hereinafter appear are secured by the process hereinafter set forth. In describing my process I have illustrated certain apparatus for carrying out the same.

In the drawings:—Figure 1 is a view partly in elevation and partly in section of parts of a very desirable form of machine which may be employed in the production of the present fabric by the process forming the present invention, the illustrated portions of the machine being those which form a joint of the fabric and the parts being shown in the position they occupy preliminary to the formation of said joint. Fig. 2 is a similar view of the same parts of the machine, showing them in the positions they occupy when the joint has been formed. Fig. 3 is a view on the plane of the line 3—3 of Fig. 1. Fig. 4 is a view on the plane of the line 4—4 of Fig. 1. Fig. 5 is a view of a section of fabric formed by my improved process. Fig. 6 is a detail view of a joint of said fabric, the binder being shown in section. Fig. 7 is a detail view of a joint embodying a binder of a slightly different form from that shown in the preceding figure. Fig. 8 is a view of a modified construction of machine to be used for forcing an offset in either or both of the intersecting members. Fig. 9 is a view of a machine constructed to use the metal forming the bond in the form of a ribbon.

Similar characters of reference denote corresponding parts in the several views.

The fabic produced by the present invention comprises intersecting members A and B whose joints are bound together by castings which are molded around the same and form binders C which tightly embrace the fabric-members A and B at and adjacent to the places of intersection of the latter. Each binder C is integral throughout and preferably is molded under pressure. Each not only tightly embraces the members A and B at a joint but is formed to provide a solid body (indicated at *c* in Fig. 6) between the wires, at and adjacent to the place of intersection of said members. These binders serve to hold the members A and B securely together at the places of intersection, give a finished appearance to the joints and enable the joints to withstand usage and the destructive effects of the atmosphere for a maximum length of time.

The form, size, number and location of the members A and B may be varied to suit the particular use to which the fabric is to be put and the taste of the constructor or user. The binders also may be of various sizes and shapes to accord with varying conditions. In Fig. 6 a binder approximately of ball-shape is shown, this being a very desirable form thereof, while in Fig. 7 a binder (marked C^{10}) having its peripheral surface formed with bevels c^{10} is illustrated. These bevels or cut-away portions of the binder lighten its weight and save metal, without materially reducing the effectiveness of the binder, as the area of the effective holding portions of the latter is not affected by the described reduction of its superficial area, the bevels or cut-away parts terminating short of the fabric-members, marked A and B in this figure. It will be apparent that other suitable shapes of binders than those herein named may be resorted to without departing from the spirit of the invention or the scope of the subjoined claims.

In the practice of the present invention the fabric-members A and B are assembled in a proper relative position and held with their place of intersection in a suitable mold, such as the one hereinafter described. A suitable quantity of an approved metal is introduced into said mold in a molten or plastic condition, or is reduced to such condition after it has reached the mold. This charge of metal is then molded or cast directly upon said member at and adjacent to their places of intersection and forms the binder hereinbefore referred to. The molding or casting is preferably completed while the metal is in a molten or plastic condition and before it becomes cool and sets.

Some of the important parts of a machine

which is well adapted to carry the process into practical effect are illustrated in Figs. 1, 2, 3 and 4, wherein 20 designates a bed adapted to support the wires, rods or other members which are to form the body of the fabric. The position of the fabric-members on the bed are defined by upstanding lugs 21 which are spaced apart at 21^a in position corresponding to the positions of said fabric members and are arranged adjacent to the places of intersection of the latter. The bed 20 also has an opening, 22, adjacent to the intersecting portion of said fabric members and a plunger 23 is mounted to move reciprocatorily within said opening. This plunger has its end formed with a recess 24 for a purpose hereinafter stated.

25 designates a reciprocatory clamping member having fingers 26 suitably disposed thereon to engage the fabric-members A and B and hold the same during the casting operation. Within this clamping member is disposed a second plunger, 27, which reciprocates relatively thereto directly opposite to the plunger 23 and is provided with a cavity 28. Suitable provision, as a channel 29 in one of the upstanding lugs 21, for example, is made for feeding molten or plastic metal into the space surrounding the intersecting portions of the fabric-members.

In the operation of this machine, the fabric-members are assembled with their intersecting portions in the molding space bounded on the sides by the upstanding lugs 21 and on the bottom and top by the plungers 23 and 27, respectively. Said plungers being retracted to the positions shown in Fig. 1, a charge of molten metal drawn from a suitable source of supply is then introduced through the channel 29. At a suitable time with reference to the supply of molten metal, the clamping member 25 is actuated to cause its fingers 26 to enter the space between the lugs 21 respectively and to engage and hold the fabric members adjacent to the place of their intersection. Then the plungers 23 and 27 are moved toward each other so as to subject the charge of molten metal to a pressure which molds it around the intersecting portions of the fabric-members, thereby completing the joint.

It will be understood of course that the machine employed in practice preferably contains means for securing the delivery of a predetermined quantity of metal forming each charge and for actuating the clamping means and plungers, all at proper relative times: and it will also be understood that the recesses 24 and 28 and the inner walls 30 of the lugs 21, all of which are presented to the molding space, give shape to the binder and are of form corresponding to that selected for the binder. As already stated, a desirable form of binder is spherical and the plunger recesses and inner walls of the lugs here shown are concave to produce such form, without however intending thereby to restrict the invention thereto. The plungers will be beveled to produce the form of binder shown in Fig. 7 and may have other forms to accord with and give the required form to a binder of a different shape from either of the foregoing.

The quantity of metal delivered to the molding chamber at each charge is that determined upon for a binder, suitable provision being made for cutting off the supply when such quantity has been delivered. This may be accomplished by so timing the movement of the plunger 27 that it will cover the channel 29 when a sufficient charge has been delivered, or other provision for the cut-off of the supply may be made.

The mechanism may be organized to make only one or a plurality of finished joints at a time, and may include provision for the dropping of the table 20 at the completion of a joint-forming operation, so as to free the fabric from the upstanding lugs 21 which, it will be noted, are received by the spaces between the joints, the fabric being maintained against movement with the table during the dropping movement of the latter; or the fabric may be freed from the lugs by raising it above the latter, either manually or automatically, if preferred. When thus freed, the fabric may be fed to bring other portions of its members into operative relation with the joint-forming means. These operations are continued until a fabric of the desired length has been formed.

In lieu of feeding the metal which forms the binder into the molding space in a molten or plastic condition, provision may be made for feeding the metal into said space in the form of a ribbon or tape, and the machine is so constructed that a predetermined amount of tape may be cut off and the cut-off portion heated to a plastic or melted condition in said space. Such a construction I have shown in Fig. 9, in which D is the ribbon or tape which is fed through the opening 29 into the molding space. The plunger 27 is provided with a cutting edge 40 which severs the end of the tape as the plunger is fed forward. The means provided for heating the cut-off part of the tape as illustrated, is an electric current, although other means may be used. One terminal for this current is marked x and the other y. The wires forming the circuit are so arranged that the circuit is made just as the plunger 27 cuts off the end of the tape, and it may be broken just as the plunger completes its forward stroke. This may be done in any suitable

manner. While the current is on that portion of the metal cut off the end of the tape can be brought to a sufficient heat to cause the dies or plungers to form the binder.

In some cases it may be desirable to offset the members forming the fabric at the point of intersection for the purpose of better locking the parts together. In Fig. 8 I have shown the machine modified to perform this function. In this construction the plunger 27 is pressed downward and its elongated edge comes in contact with the cross wire B. Upon further pressure, the wire B causes the wire A to be pressed downward and upon further pressure the wire B on either side of the intersecting point will be pressed downward to a distance substantially equal to the thickness of the wire A thereby forming an offset in either one or both of said wires A and B according to the distance that the plunger 27 travels.

Having now described the invention what I believe to be new and desire to secure by Letters Patent, is:

1. The herein described method of producing metal fabrics for fences and other purposes, which consists in assembling members thereof in an intersecting relation with their intersecting portions in a molding space having movable walls, delivering a charge of metal to said space and while said charge is in a molten or plastic condition moving said walls to subject the charge to pressure to form around the intersecting portions of said members a binder which closely embraces said members at and adjacent to said intersecting portions and fills the space between them, at the joint.

2. The herein described method of producing metal fabrics for fences and other purposes, which consists in assembling members thereof in an intersecting relation with their intersecting portions in a molding space, delivering a predetermined quantity of molten or plastic metal to said space and then subjecting this charge of metal to pressure adapted to form a binder, which closely embraces said members at and adjacent to said intersecting portions and fills the space between them, at the joint.

3. The herein described method of producing metal fabrics for fences and other purposes, which consists in assembling members thereof in an intersecting relation with their intersecting portions in a molding space, delivering a predetermined quantity of metal to said space, reducing this metal to molten or plastic condition and subjecting it to pressure to form a binder which closely embraces said members at and adjacent to said intersecting portions and fills the space between them, at the joint.

4. The herein described method of producing metal fabrics for fences and other purposes, which consists in assembling members thereof in an intersecting relation with their intersecting portions in a molding space, delivering a predetermined quantity of metal to said space, reducing this metal to molten or plastic condition by subjecting it to the action of a current of electricity, and then pressing it to form a binder which closely embraces said members at and adjacent to said intersecting portions and fills the space between them, at the joint.

5. The herein described method of producing metal fabrics for fences and other purposes, which consists in assembling members thereof in an intersecting relation with their intersecting portions in a molding space, feeding relatively to said space a strip of metal in tape-like form, severing therefrom, in the molding space, a quantity thereof adapted to form a charge, reducing this charge to molten or plastic condition and while it is in such condition subjecting it to pressure adapted to form a binder which closely embraces said member at and adjacent to said intersecting portions and filling the space between them, at the joint.

6. The herein described method of producing metal fabrics for fences and other purposes, which consists in assembling the members thereof in an intersecting relation, clampingly holding the members in such relation, supplying to the intersecting members a charge of metal which is in a molten or plastic condition, and then molding or casting by pressure the said metal before it sets or hardens.

7. The herein described method of producing metal fabric for fences and other purposes, which consists in assembling the members thereof in an intersecting relation with their intersecting parts in a molding space, delivering a charge of metal to said space, and molding or casting said charge around the intersecting parts of said members, and simultaneously forming an offset on one or either of said members at the place of intersection.

In witness whereof I have hereunto set my hand at the city, county and State of New York, this fifth day of April, 1911.

EDWARD FULDA.

In presence of—
ISABEL R. RICHARDS,
JOHN J. RANAGAN.