United States Patent

Petersen

[15] **3,704,976**

[45] **Dec. 5, 1972**

[54] TABLET PRESS

[72] Inventor: **Ross Petersen,** Route 3, Box 230, Astoria, Oreg. 97103

[22] Filed: **April 15, 1970**

[21] Appl. No.: **28,825**

[52] **U.S. Cl.** **425/352,** 100/238

[51] **Int. Cl.** **B41f 17/36**

[58] **Field of Search** ..... 107/54 G, 14 R, 14 B, 14 F, 107/17, 18; 100/238; 18/16.5

[56] **References Cited**

UNITED STATES PATENTS

3,566,806	3/1971	Forster	107/17
599,601	2/1898	Freck	107/18
527,980	10/1894	Hereth	107/18
432,502	7/1890	Wright	107/18
1,435,599	11/1922	Gaillard	107/17
1,505,827	8/1924	Villasenor et al.	107/17
2,682,080	6/1954	Saalfrank	107/18
1,466,509	8/1923	Laskey	107/14 B
2,846,723	8/1958	Frank	107/17
2,232,180	2/1941	Kux	107/17
3,118,183	1/1964	Gex et al.	107/17

Primary Examiner—Frank L. Abbott
Assistant Examiner—Leslie A. Braun
Attorney—Clarence A. O'Brien and Harvey B. Jacobson

[57] **ABSTRACT**

A pair of generally horizontal beams pivotally supported intermediate their opposite ends for oscillation about vertically spaced generally horizontal transverse axes and including one pair of ends swingable toward and away from a horizontal plane disposed therebetween and in which a die body is stationarily supported. The die body has an upright cylindrical mold passage formed therethrough and the one pair of ends of the beams support mold pistons projecting toward each other and reciprocal in the mold passage. The upper piston is oscillatable from an upper position spaced above the upper end of the mold passage to a lower position projecting downwardly into the upper end of the mold passage and the lower piston is oscillatable between a lower position spaced below the upper end of the mold passage and an upper position substantially flush with the upper end of the mold passage. Operating structure is provided for sequentially raising the upper piston to its upper position and lowering the lower piston to its lower position, registering the discharge end of a granular material chute with the upper end of the mold passage in order to fill the latter with material from which a tablet is to be pressed, swinging the chute out of registry with the upper end of the mold passage, lowering the upper piston to a position just entering the upper end of the mold passage, forcing the upper and lower pistons downwardly and upwardly, respectively, to press the material into a tablet while simultaneously rotating the pistons at least slightly in opposite directions, raising the upper and lower pistons to their upper positions, and then swinging the discharge end of the chute back into registry with the upper end of the mold passage, which last step also functions to brush or sweep the last formed tablet press from above the upper end of the lower piston. As the chute moves into final registry with the mold passage, the lower piston is lowered to its lower position in order that the mold cavity or passage thereabove may be again filled with granular material to be pressed into a tablet.

10 Claims, 8 Drawing Figures

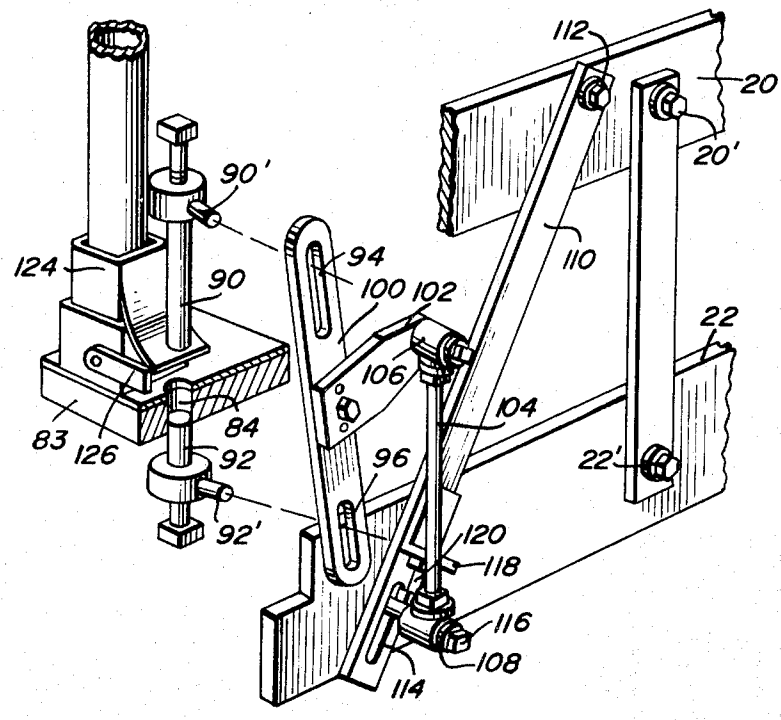

Fig. 1

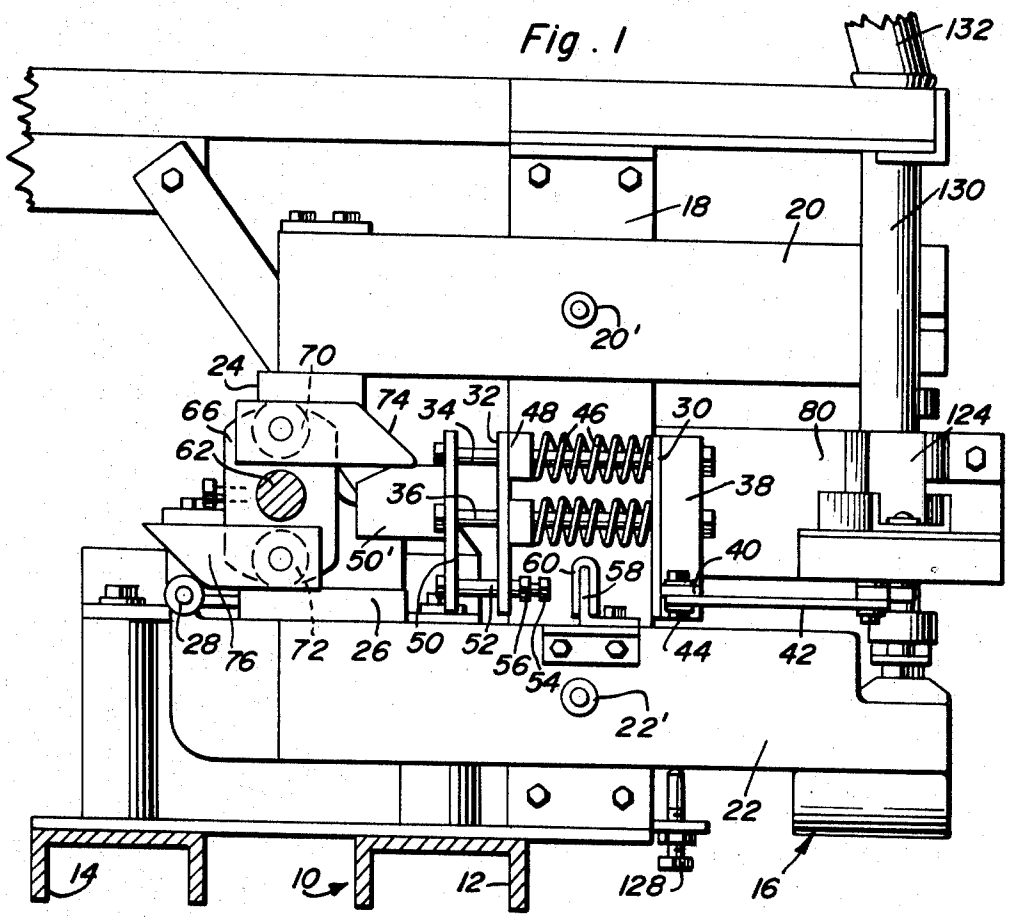

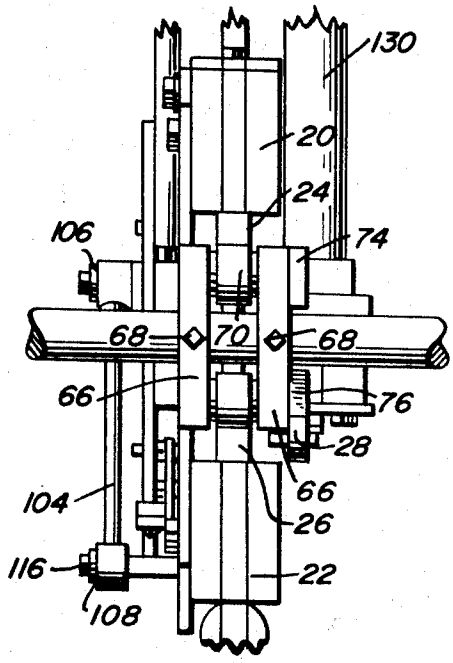

Fig. 2

Ross Petersen

INVENTOR.

BY Clarence A. O'Brien and Harvey B. Jacobson

Attorneys

Fig . 3

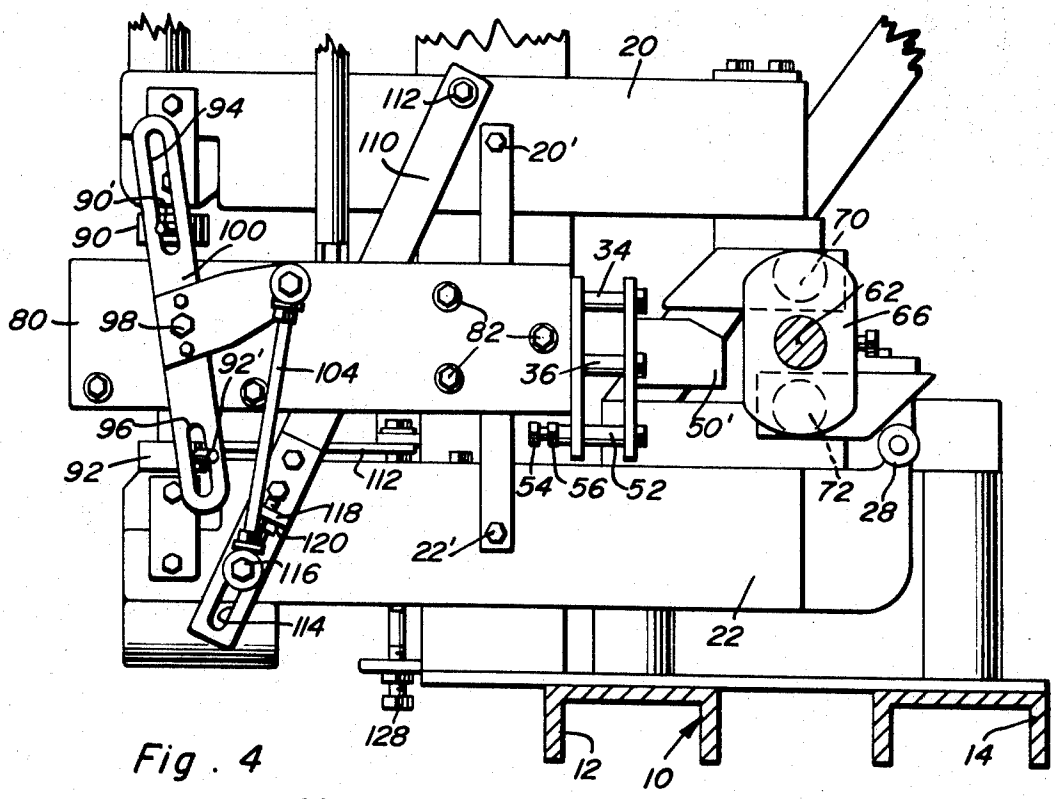

Fig . 4

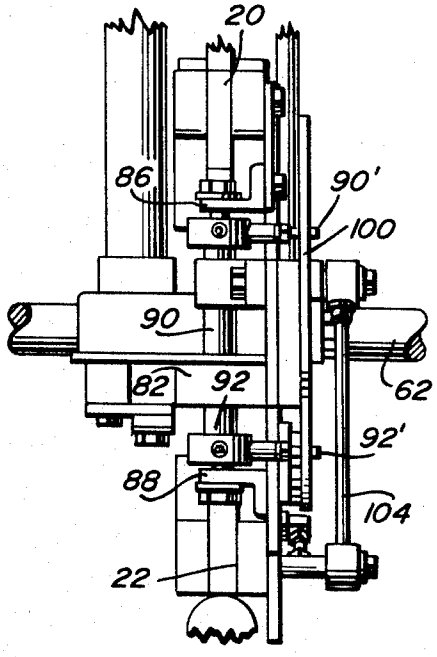

Ross Petersen
INVENTOR.

BY Clarence A. O'Brien and Harvey B. Jacobson
Attorneys

Fig. 5

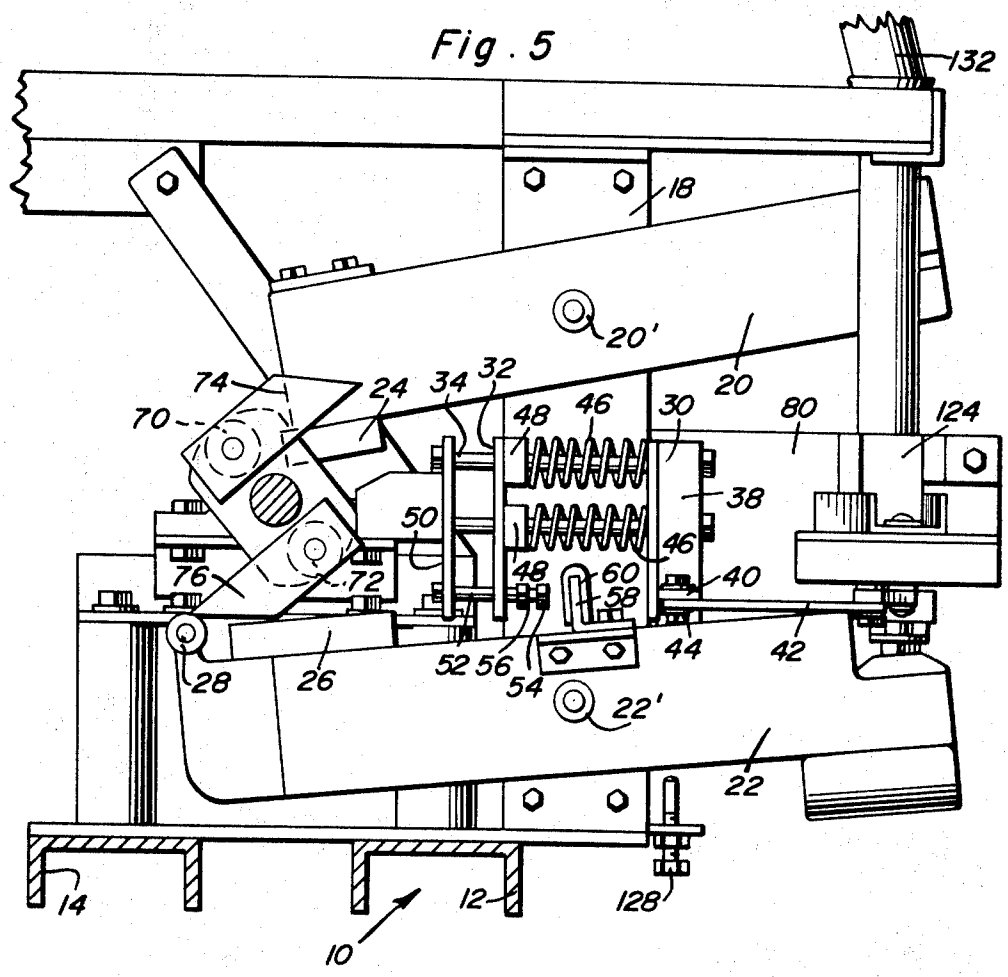

Fig. 6

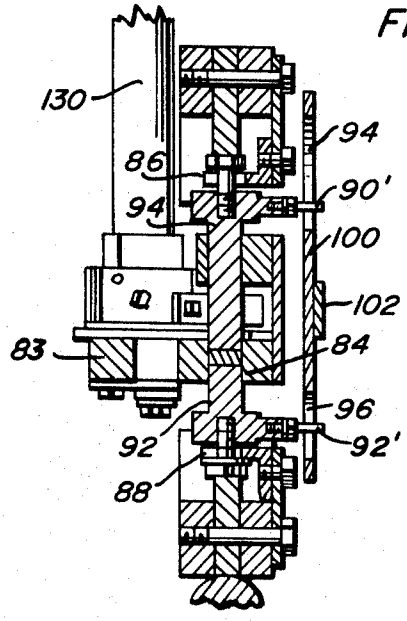

Ross Petersen

INVENTOR.

BY Clarence A. O'Brien and Harvey B. Jacobson

Attorneys

Fig. 7

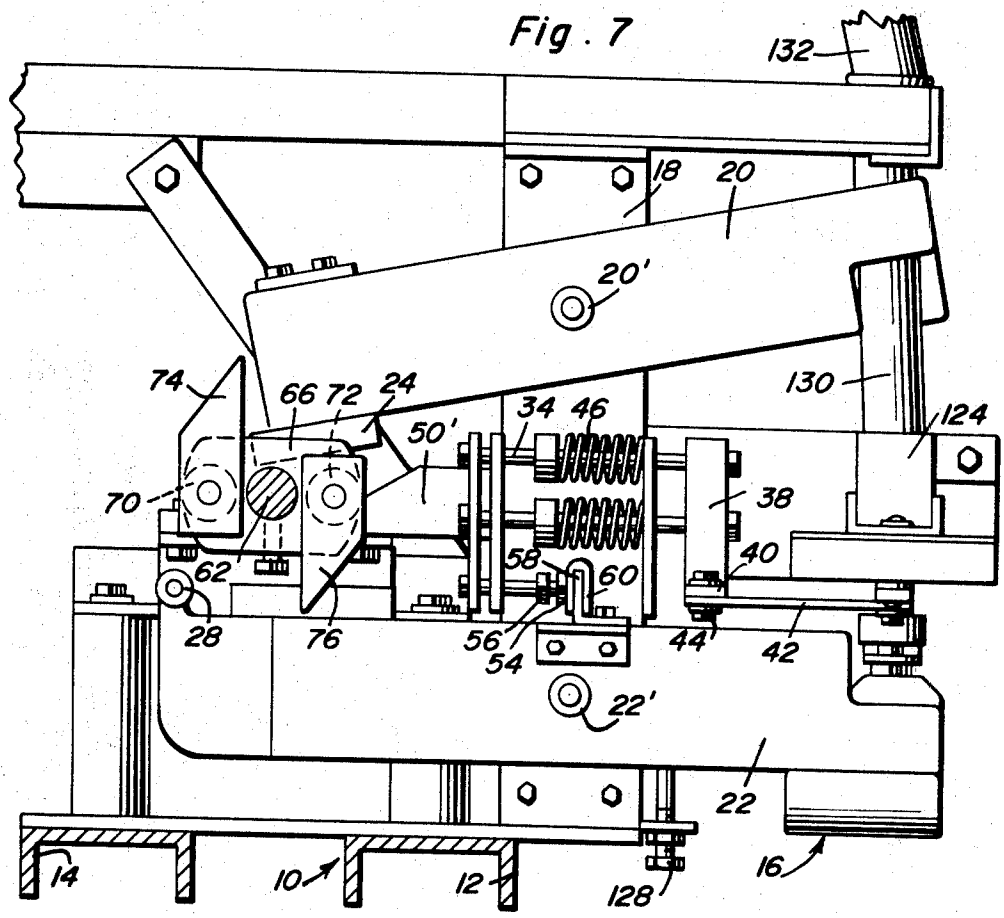

Fig. 8

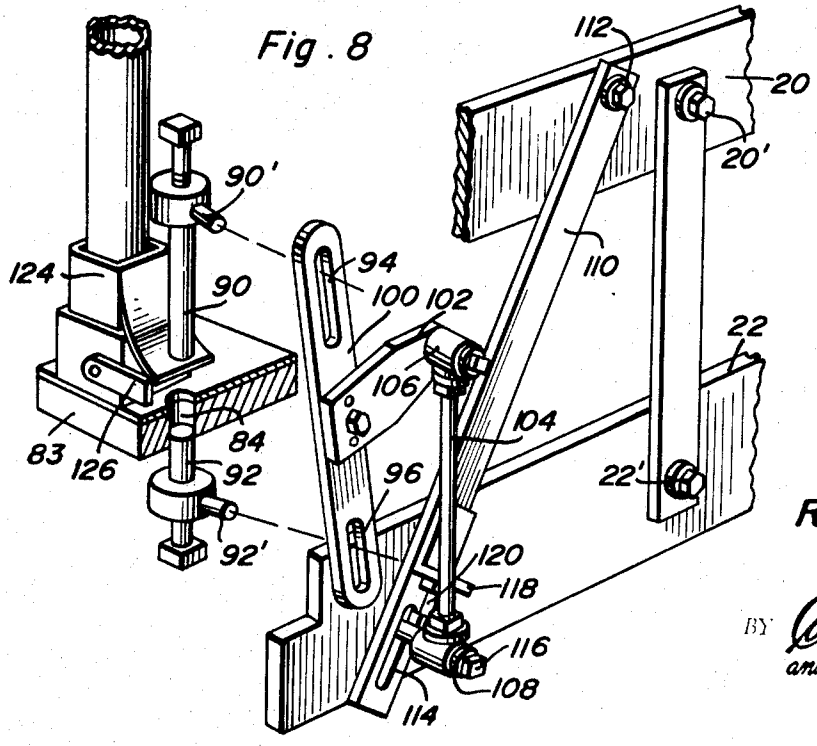

Ross Petersen

INVENTOR.

BY Clarence A. O'Brien and Harvey B. Jacobson

Attorneys

TABLET PRESS

The tablet press has been specifically designed to form compact, easy-to-use fertilizer tablets which, in fertilizing various plants, eliminate the need for measuring small quantities of dry materials. A safe and scientifically balanced plant food may be formed by utilizing existing plant fertilizer materials and such plant food in tablet form may last up to two years and release the desired plant nutrients throughout such long periods.

The tablet press illustrated and described hereinafter may be utilized singly should there be a need for only limited production of fertilizer tablets. However, the press is constructed in a manner whereby an extended bank or series of tablets presses of the instant invention may be driven from a common power source in the event production requirements dictate that more than one tablet press be used.

The tablet press forms tablets in a die passage by urging upper and lower pistons downwardly and upwardly, respectively, toward each other to compress granular material therebetween. In this manner, even compression of the granular material is achieved and a hard uniform tablet is formed. In addition, the upper and lower pistons utilized in each press are oscillated in opposite directions relative to and about the longitudinal axis of the die passage in which the tablet press is being formed both during compression and forming of each tablet during movement of the pistons toward each other and during movement of the pistons away from each other, whereby the opposing faces of the pistons are self-wiping in nature resulting in the opposing faces of the pistons or punches being maintained clean and tending to release freely from each tablet formed. This of course insures that exactly the same quantity of granular material is compressed into each tablet and thereby eliminates excess strain on or complete breakdown of the press.

The main object of this invention is to provide a tablet press which may be utilized in an efficient manner to form hard uniform fertilizer tablets from granular fertilizer material.

A further object of this invention, in accordance with the immediately preceding object, is to provide a tablet press constructed in a manner whereby each tablet being formed is compressed between pistons or punch heads moving toward each other relative to a stationary die or mold passage.

Still another object of this invention is to provide a tablet press in accordance with the immediately preceding object and whose pistons or punches are rotated about their longitudinal axes in opposite directions both during movement of the pistons toward each other and movement of the pistons away from each other after each tablet has been formed.

A final object of this invention to be specifically enumerated herein is to provide a tablet press which will conform to conventional forms of manufacture, be of simple construction and easy to use so as to provide a device that will be economically feasible, long lasting and relatively trouble-free in operation.

These together with other objects and advantages which will become subsequently apparent reside in the details of construction and operation as more fully hereinafter described and claimed, reference being had

to the accompanying drawings forming a part hereof wherein like numerals refer to like parts throughout, and in which:

FIG. 1 is a left side elevational view of the tablet press with the pivoted beam portions thereof in compression position;

FIG. 2 is a rear elevational view of the assemblage illustrated in FIG. 1;

FIG. 3 is a right side elevational view of the assemblage illustrated in FIGS. 1 and 2;

FIG. 4 is a front elevational view of the assemblage illustrated in FIGS. 1-3;

FIG. 5 is a left side elevational view of the tablet press with the oscillatable beam portions thereof in their relative positions assumed when a formed tablet is being ejected from the mold die;

FIG. 6 is a transverse vertical sectional view taken substantially upon a plane passing through the press die during compression of fertilizer material to form a tablet;

FIG. 7 is a left side elevational view of the press illustrating the relative positions of the beam portions thereof during the step of filling the mold die; and

FIG. 8 is a fragmentary perspective view illustrating various linkage components of the press in operative association.

Referring now more specifically to the drawings, the numeral 10 generally designates an elongated framework including a pair of front and rear horizontal elevated beams 12 and 14. The beams 12 and 14 extend longitudinally of the framework 10 and the latter may be as long as desired and feasible.

A tablet press constructed in accordance with the present invention is generally referred to by the reference numeral 16 and a plurality of tablet presses 16 may be spaced longitudinally of the framework 10, if desired.

Each tablet press 16 includes an upright 18 from which a pair of vertically spaced, generally parallel and front to rear extending beams 20 and 22 are supported for oscillation about vertically spaced generally horizontal axes as at 20' and 22'.

The rear ends of the beams 20 and 22 include opposing upper and lower plates 24 and 26 and the rear end of the lower beam 22 includes a journaled cam roller 28. Further, the support 18 has front and rear plates 30 and 32 secured thereto through which vertically spaced guide fasteners 34 and 36 are reciprocal. The forward ends of the guide fasteners 34 and 36 have a support arm 38 mounted thereon for reciprocation therewith and the lower end of the support arm 38 includes an apertured mounting lug 40 to which one end of a connecting rod 42 is pivotally secured by means of a fastener 44. A pair of compression springs 46 are disposed about the guide fasteners 34 between the plates 30 and 32 and the front ends of the compression springs 46 bear against the back side of the plate 30. Abutment collars 48 are secured to the rear end portions of the guide fasteners 34 just forward of the plate 32 and the collars 48 are reciprocal with the guide fasteners 34 and have their forward faces engaged with the rear ends of the compression springs 46. A third plate 50 is secured to and supported from the rear ends of the guide fasteners 34 and the lower end of the plate 50 has the rear end of an abutment ram 52 supported

therefrom. The forward end of the abutment ram **52** is slidably and guidingly received through the lower end of the plate **32** and is provided with a threaded abutment member **54** which may be rotated to increase or decrease the effective length of the ram **52**. A locknut **56** is provided to maintain the abutment member **54** in adjusted position.

The lower bar **22** has an upstanding abutment flange **58** supported therefrom forward of the abutment member **54** and a U-shaped resilient abutment element **60** is secured over the abutment flange **58** in order to cushion the impact of the abutment member with the abutment flange **58**.

The framework **10** journals a rear transverse drive shaft **62** in any convenient manner (not shown) and the drive shaft **62** is driven at a suitable speed from any desirable power source such as an electric motor (not shown). Each of the tablet presses **16** includes a pair of mounting blocks **66** spaced axially along the drive shaft **62** and secured thereto for rotation therewith by means of setscrews **68**. A pair of rollers **70** and **72** are journaled between corresponding end portions of the mounting blocks **66** and a pair of cams **74** and **76** are mounted on the left mounting block **66** on the side thereof remote from the right mounting block **66**.

From FIG. **2** of the drawings it may be seen that the plates **24** and **26** are received between the mounting blocks **66** and engageable by the rollers **70** and **72**. Further, the roller **28** is engageable by each of the cams **74** and **76**.

A central horizontal front to rear extending beam **80** is supported from the support **18** by means of fasteners **82** and a die body **83** projects to the left from the forward end of the beam **80** and has a vertical die passage or cavity **84** formed therethrough. The passage **84** is cylindrical and the upper and lower beams **20** and **22** include bifurcated supports **86** and **88**, respectively, which engage diametrically reduced portions of upper and lower pistons **90** and **92** rotatably and reciprocally supported from the front end of the bar **80** whereby up-and-down movement of the front ends of the bars **20** and **22**, and thus the bifurcated supports **86** and **88**, will cause up-and-down movement of the pistons **90** and **92**. The upper piston **90** is reciprocal between an upper position spaced above the upper surface of the die block **82** and a lower position with the lower end of the piston **90** projecting down into the die passage or bore **84**, see FIG. **6**. Further, the lower piston **92** is reciprocal between a lower position below that illustrated in FIG. **6** of the drawings and an upper position with the upper end of the piston **92** substantially flush with the upper surface of the die block **83**.

The pistons **90** and **92** include generally cylindrical arm portions **90'** and **92'** which project horizontally outwardly of the right sides of their upper and lower ends, respectively, and the free end portions of the arms **90'** and **92'** are loosely slidingly received in upper and lower slots **94** and **96** formed in an upstanding arm pivotally supported from the bar **80** as at **98**. The bar **100** includes a rearwardly projecting arm **102** to whose free end the upper end of an upstanding connecting rod **104** is pivotally connected as at **106**. The lower end of the connecting rod **104** is pivotally secured to the forward end of the lower bar **22** as at **108** and it may be seen that the connecting rod **104** is adjustable in length.

Further, an elongated upstanding push bar **110** has its upper end pivotally secured to the upper bar **20** as at **112** and a slot **114** in its lower end through which the pivot fastener **116** for the lower end of the connecting rod **104** is slidingly received. The slot **114** extends longitudinally of the push bar **110** and the pivot fastener **116** also functions to pivotally secure the lower end of the connecting rod **104** to the lower bar **22**.

The push bar **110** includes a bracket assembly **118** supported therefrom and from which an adjustable abutment screw **120** is supported. The lower end of the abutment screw **120** is engageable by the fastener **116** to establish a minimum spatial relation between the front ends of the bars **20** and **22** whereby raising of the forward end of the bar **22** above a predetermined point will also cause the front end of the bar **20** to be raised.

In operation, and assuming that the beams **20** and **22** are positioned as illustrated in FIG. **1** in compression position with a tablet of granular material being formed within the passage **84** between the pistons **90** and **92**, as the drive shaft **62** rotates in a counterclockwise direction as viewed in FIG. **1** of the drawings the upper and lower rollers **70** and **72** move downwardly and upwardly, respectively, away from the plates **24** and **26** thereby relieving the pressures urging the rear ends of the beams **20** and **22** apart. The cam **76** then contacts the roller **28** causing the rear end of the beam **22** to be lowered and the forward end of the beam **22** to be raised. Upward movement of the forward end of the beam **22** exerts an upward push on the push-bar **110** and elevates the piston **92** to a position substantially flush with the upper surface of the die body **83**. Of course, the upwardly push on the push beam **110** also raises the front end of the upper beam **20** to raise the upper piston **90** and upward movement of the lower piston **92** elevates the formed tablet to the level of the upper surface of the die body **83**. Further, during upward movement of the forward end of the lower beam **22** the connecting rod **104** causes the bar **100** to rotate slightly in a counterclockwise direction as viewed in FIG. **8** of the drawings so that the pistons **90** and **92** are slightly rotated in clockwise and counterclockwise directions, respectively, as viewed from above. This rotation of the pistons **90** and **92** enables the opposing end faces of the pistons to freely release the formed tablet.

After the toe of the cam **76** has passed the roller **28**, the roller **72** contacts an abutment **50'** carried by the plate **50** so as to urge the guide fasteners **34** and **36** as well as the support arm **38** forwardly. Forward movement of the support arm **38** shifts the connecting rod **42** forwardly and rotates the material discharge outlet chute **124** in a clockwise direction as viewed from above from a position thereof illustrated in FIGS. **1** and **5** of the drawings to the position thereof illustrated in FIGS. **7** and **8** of the drawings so that the sweep arm **126** carrier by the chute **124** will swing across the upper end of the passage **84** to push the last formed tablet forwardly over the upper surface of the body **83**.

As the chute **124** is swung to the position thereof illustrated in FIGS. **7** and **8** of the drawings, its outlet is registered with the passage **84**.

While the chute **124** is maintained registered with the upper end of the passage **84**, the forward end of the bar **22** is urged downwardly by engagement of the abut-

ment member 54 with the abutment flange 58, see FIG. 7, and the forward end of the bar 22 is lowered into engagement with the adjustable stop 128 carried by the framework 10. As the piston 92 is lowered with the forward end of the bar 22, the passage 84 is filled with granular material and the roller 72 subsequently moves out of engagement with the abutment 50' so as to allow the support arm to shift rearwardly under the biasing action of the springs 46 and the chute 124 to therefore return to the positions thereof illustrated in FIGS. 1 and 5 of the drawings with the upper end of the passage 84 uncovered. Then, the rollers 72 and 70 engage the upper and lower plates 24 and 26, respectively, to again urge the rear ends of the beams 20 and 22 apart and thus the pistons 90 and 92 toward each other so as to form the next fertilizer pellet.

The chute 124 is oscillatably supported from the mold body or die body 83 in any convenient manner and is rotatable relative to the lower end of a discharge tube 130 extending downwardly from a hopper outlet 132 for supplying granular material to the chute 124.

The foregoing is considered as illustrative only of the principles of the invention. Further, since numerous modifications and changes will readily occur to those skilled in the art, it is not desired to limit the invention to the exact construction and operation shown and described, and accordingly all suitable modifications and equivalents may be resorted to, falling within the scope of the invention as claimed.

What is claimed as new is as follows:

1. A press including a body having an upwardly opening elongated and upstanding material compression chamber formed therein, upper and lower pressure pistons operable longitudinally in said chamber, support means supporting said upper piston for reciprocation between an upper position spaced above the upper end of said chamber and a lower position displaced downwardly into the upper end of said chamber, said support means also including means supporting said lower piston for movement in said chamber between a lower position and an upper position spaced thereabove and substantially flush with the upper end of said chamber, a material fill discharge outlet shiftable laterally of the upper end of said chamber between a first position disposed on one side of said chamber, a second position disposed in registry with the upper end of said chamber and a third position out of registry with and disposed to the remote side of the upper end of said chamber, and drive means operatively connected to said outlet and said pistons operable to sequentially (1) maintain the upper piston in its upper position while lowering the lower piston to its lower position and shifting said discharge outlet from its first position to its third position through its second position, (2) simultaneously raise said lower piston to an intermediate position spaced below the upper end of said chamber and lower said upper piston to its lower position, and (3) then raise said upper and lower pistons to their upper positions.

2. The combination of claim 1 wherein said support means includes a pair of upper and lower beams pivotally supported intermediate their upper and lower ends for oscillation about vertically spaced generally parallel horizontal axes extending transversely of said beams intermediate their opposite ends, said pistons being connected to one pair of corresponding ends of said beams for oscillation therewith.

3. The combination of claim 2 wherein said drive means includes rotary cam means disposed between the other pair of ends of said arms and coacting cam follower means carried by said other pair of ends.

4. The combination of claim 1 wherein said material fill discharge outlet comprises a gravity flow outlet.

5. The combination of claim 4 wherein said body includes a generally planar upper surface portion upwardly through which said chamber opens, said discharge outlet being slidingly engaged with said upper surface portion whereby the latter closes said discharge outlet to the discharge of material therefrom except when said outlet is registered with the upper end of said chamber.

6. The combination of claim 1 wherein said support means also supports said upper and lower pistons for oscillation about the center axis of said chamber, said drive means also including means operable to rotate said pistons in selected directions during upward movement of the lower piston to its intermediate position and the upper piston to its lower position and to rotate said pistons in the opposite directions during their subsequent movement to their upper positions.

7. The combination of claim 6 wherein said drive means for rotating said pistons includes means for inversely rotating said pistons.

8. The combination of claim 1 wherein said support means includes a pair of upper and lower beams pivotally supported intermediate their upper and lower ends for oscillation about vertically spaced generally parallel horizontal axes extending transversely of said beams intermediate their opposite ends, said pistons being connected to one pair of corresponding ends of said beams for oscillation therewith, said press including means adjustably limiting downward movement of said lower piston.

9. The combination of claim 1 wherein said support means includes a pair of upper and lower beams pivotally supported intermediate their upper and lower ends for oscillation about vertically spaced generally parallel horizontal axes extending transversely of said beams intermediate their opposite ends, said pistons being connected to one pair of corresponding ends of said beams for oscillation therewith, said drive means including rotary cam means disposed between the other pair of ends of said arms and coacting cam follower means carried by said other pair of ends, said rotary cam means being journaled for rotation about an axis generally paralleling said axes, whereby a plurality of side-by-side pairs of pairs of upper and lower beams may be actuated by means of a plurality of rotary cam means spaced along the same rotary shaft.

10. The combination of claim 1 wherein said support means includes a pair of upper and lower beams pivotally supported intermediate their upper and lower ends for oscillation about vertically spaced generally parallel horizontal axes extending transversely of said beams intermediate their opposite ends, said pistons being connected to one pair of corresponding ends of said beams for oscillation therewith, said drive means includes rotary cam means disposed between the other pair of ends of said arms and coacting cam follower means carried by said other pair of ends, said rotary

cam means being journalled for rotation about an axis generally paralleling said axes, whereby a plurality side-by-side pairs of pairs of upper and lower beams may be actuated by means of a plurality of rotary cam means spaced along the same rotary shaft.

* * * * *