Sept. 20, 1949. E. MICKLEY 2,482,119

METHOD OF MAKING STEMS FOR ELECTRIC LAMPS

Filed Dec. 15, 1941

Fig. 1.

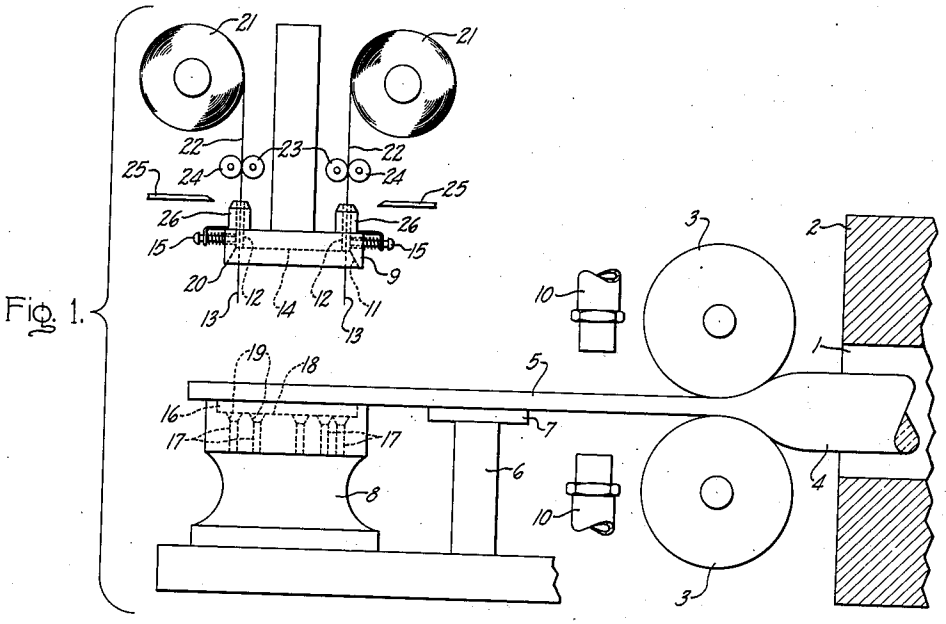

Fig. 2.

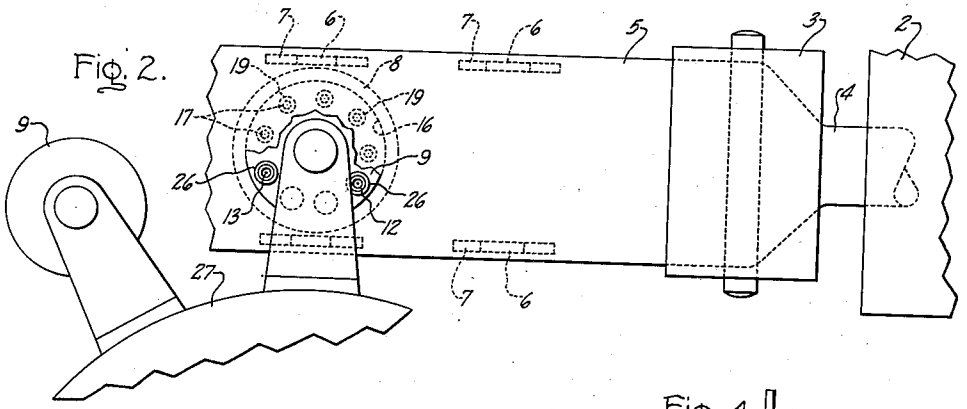

Fig. 3.

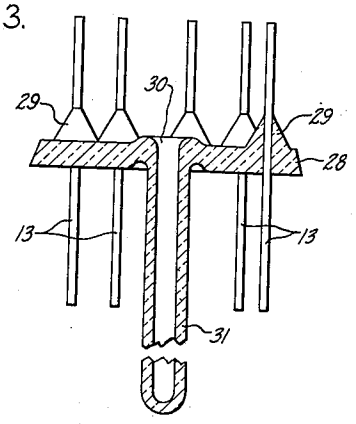

Fig. 4.

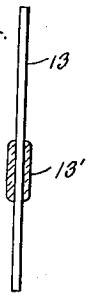

Inventor:
Erich Mickley,
by John H. Anderson
His Attorney.

Patented Sept. 20, 1949

2,482,119

UNITED STATES PATENT OFFICE

2,482,119

METHOD OF MAKING STEMS FOR ELECTRIC LAMPS

Erich Mickley, Berlin-Zehlendorf, Germany; vested in the Attorney General of the United States

Application December 15, 1941, Serial No. 423,106
In Germany October 8, 1940

Section 1, Public Law 690, August 8, 1946
Patent expires October 8, 1960

2 Claims. (Cl. 49—78)

1

My invention relates to a method of making seals between glass and metal members, and more particularly to the manufacture of stems for electric lamps, discharge tubes or similar devices, such stems comprising a glass disc having leading-in conductors sealed therethrough.

The bulbs or envelopes of electric lamps, discharge tubes and similar devices are frequently closed by means of stems comprising flat glass sealing discs which are fused to the edge of the glass lamp bulb or envelope and which carry a multiplicity of leading-in wires. So far, such stems have been usually produced by first pressing, from glass, a plate-shaped disc with a multiplicity of holes for the leading-in wires, and then inserting and sealing the leading-in wires into the holes of the glass disc, if necessary with the help of a compensating sealing glass of lower melting point. It is also known to position the leading-in wires in a predetermined position within a mold, and to then force liquid or softened glass around the leads so that this glass constitutes the sealing disc. Both of the above described methods of producing stems are comparatively slow and do not always permit a sufficiently tight embedding of the leading-in wires in the glass disc.

One object of my invention is to provide an improved method of producing stems for electric lamps, discharge tubes and similar devices which is simpler and more rapid than methods heretofore used and which enables a more economical production of such stems.

A feature of the invention is the punching of a glass disc from a ribbon of plastic glass, and the insertion and embedding of the leading-in wires into said disc simultaneously with the punching thereof.

Further objects and advantages of my invention will appear from the following description of a species thereof and from the accompanying schematic drawing in which:

Fig. 1 is an elevation of apparatus for practicing the method comprising my invention; Fig. 2 is a top view of modified apparatus comprising a single die and a plurality of cooperating punches carried by a turret; and Fig. 3 is a sectional view of a stem produced by the method according to the invention and including an exhaust tube sealed thereto; and Fig. 4 is an elevation of a lead-in wire preliminarily coated with glass prior to manufacture of the stem.

In accordance with the invention, the stems may be produced by heating a glass rod until it is soft, then rolling the softened glass rod into a band or ribbon of the desired disc or plate thickness, and leading the band between the co-operating punch and die members of a punching tool, one member of which is equipped with a multiplicity of leading-in wires protruding therefrom, after which the punch member is actuated so as to punch a glass blank or disc out of the glass band. At the same time, the leading-in wires protruding from the punch member are forced through the glass mass of the disc and are firmly embedded in the latter.

2

If the glass blank or disc is to consist of hard glass, that is to say, a glass which can withstand very high temperatures and which has a low coefficient of thermal expansion, then it is advisable to cover, prior to the closing of the punch and die members, the leading-in wires protruding from the punch member with a glass layer, especially on those portions of the leading-in wires which are to lie within the glass mass of the disc; and the coefficient of thermal expansion of such glass layer must lie between the coefficient of thermal expansion of the glass out of which the sealing disc is made and the coefficient of thermal expansion of the metal of which the leading-in wires consist.

Referring to the drawing, in front of an outlet opening 1 in an oven 2, which may be heated in any desired manner, is mounted a pair of rolls 3 through which passes a glass rod 4 which runs continuously through the oven and is heated therein to a softening temperature. The individual rolls of the system of rolls 3 are so adjusted with respect to each other that the glass rod 4 is rolled into a glass band or ribbon 5 of the thickness of the sealing disc which is to be produced. The glass band 5 resulting from the rolling process is held in a horizontal position by supporting posts 6 which are equipped with resting plates 7 or supporting rollers. The glass band 5 is led through a press and punch tool which consists of a stationary die member 8 and a movable upper punch member 9 arranged to move vertically so as to close against the die member 8. Between the members 8, 9 and the pair of rolls 3, a set of burners 10 may be provided for the purpose of reheating the glass band 5 which is cooled during the rolling process. In this manner the band 5 of glass will have the necessary softening temperature for the molding thereof.

The upper movable punch member 9 of the punching tool has a recess 11 in its under or punching surface which corresponds to the shape of the sealing member or disc to be produced. A multiplicity of vertically extending holes 12 is provided in the body portion of the movable

punch member 9 above the recess 11 therein, through which holes the leading-in wires 13 extend and are so clamped therein as to protrude freely downward beyond the under surface 14 of the movable punch member 9. The leading-in wires 13 may be cut to the desired length and inserted in the upper movable punch member 9 of the punching tool. Suitable clamping members, for instance, spring actuated bolts 15, are provided on the upper movable punch member 9 for the purpose of securing the leading-in wires 13 in place within the holes 12 in the said movable punch member 9.

The die member 8 of the punching tool has its upper surface provided with a recess 16 which, when the punching tool is closed, receives the upper movable punch member 9 so as to complete the recess 11 of the upper punch member, thus forming a closed mold. The lower die member 8 is also provided with a multiplicity of vertical holes 17 extending downward from the upwardly facing or bottom surface 18 of the recess 16, the said holes 17 corresponding to and being in vertical alignment with the holes 12 in the upper punch member 9. The uppermost ends of the holes 17 are preferably countersunk, as indicated at 19 in Fig. 1, to provide upwardly flaring enlarged recesses in the bottom surface of the recess 16.

When the punching tool is closed, the edge or rim 20 of the upper movable punch member 9 punches from the glass band 5 which lies between the cooperating punch and die members, a plate-shaped disc or glass body, and at the same time the leading-in wires 13 protruding from the upper punch member 9 penetrate through the soft glass mass of the band 5 and enter the holes 17 in the die member 8. The free ends of the leading-in wires 13 protruding from the upper punch member 9 are thus received within the holes 17, the said holes 17 being made of slightly larger diameter than that of the leading-in wires so as to permit free entry of the leading-in wires therein. In passing through the plastic glass band or ribbon 5, the leading-in wires 13 carry a certain amount of the plastic glass along therewith and into the countersunk recesses 19 of the holes 17 where it is formed into the shape of the said countersunk recesses by the compression of the punching tool to thereby form conical shaped seal reinforcing extensions or nipples 29 (Fig. 3) on the sealing disc 28. During the punching operation, the clamping members 15 which secure the leading-in wires 13 in the upper punch member 9 are released, an operation which may take place at the last moment when the mold or punching tool is closed and which may be accomplished by a limiting or stopping device. When the clamping members 15 are so released, the upper punch member 9 is then moved upwardly and returned to its normal starting or inoperative position. During the upward or return movement of the upper punch member 9, the leading-in wires 13 remain in the punched glass disc whereupon they become hermetically sealed within the glass mass of the disc while the latter is gradually cooling.

In order to eliminate the insertion of the leading-in wires 13 after each upward movement of the upper punch member 9, a number of spools or coils 21 of wire corresponding to the desired number of leading-in wires may be arranged above the upper punch member 9 of the punching tool. From these spools of wire, a corresponding number of wire sections 22, all of exactly the same size and length, can be rolled or fed off and can be introduced positively into the holes 12 of the upper punch member, for instance, by means of two rollers 23, 24 which grasp the wire elastically between themselves and which may be moved by means of a ratchet wheel (not shown). After the wire sections 22 have been reeled off the wire spools 21 and have been introduced in the holes 12 in the upper punch member 9, the ends of such wire sections may be cut off, by means of a coacting knife 25, closely above the upper punch member 9; or they may be cut immediately adjacent the nozzles 26 which project upwardly from the upper punch member 9 and through which the wires 22 enter.

As indicated in Fig. 2, the die member 8 of the punching tool may co-operate alternately with several upper punch members 9 instead of with only one upper punch member, and these upper punch members 9 can then be mounted on a support or turret 27 which is rotated intermittently. It then becomes possible to introduce wires 22 in other upper punch members 9, to cut these wires 22 to the desired length to form the leading-in wires 13, and to check up the relation of the various parts of the upper punch member, all this during the time when a stem is produced by the actuation of that movable punch member 9 which is in co-operating punching relation with the die member 8.

In those cases where the embedding of the leading-in wires 13 in the solidified glass body or disc proves to be unsatisfactory (this might easily occur when the glass discs are made of hard glass), the upper punch members 9 of the punching tool are preferably so designed that they can be swung away in order that, in one operating position of the intermittently rotating supports for the upper punch members 9, the corresponding upper punch member 9 may be swung up so as to become inverted, thus permitting the placing of glass rings (not shown) on the then upwardly protruding leading-in wires 13. The coefficient of thermal expansion of the said glass rings should, of course, lie between the coefficient of thermal expansion of the hard glass of which the sealing discs are to be made and that of the metal out of which the leading-in wires 13 are made. In the said operating position, the glass rings are fused by means of suitable burners in such a way that the portions of the leading-in wires 13 within the recess 11 in the upper punch member will be provided with a strongly adhering glass layer 13' which, later on, during the closing of the punching tool and the insertion of the leading-in wires into the glass band 5, will lie within the glass mass of the said band. Such glass rings thus form an intermediate coating between the metal of the leading-in wires 13 and the glass of the sealing disc, which coating guarantees a vacuum tight embedding of the leading-in wires in the sealing disc.

The number of leading-in wires to be inserted, their placement with respect to one another, and the final shape of the punched glass stem all may, of course, be optional.

In the center part of the punched sealing disc 28 (Fig. 3) produced as described hereinabove, a hole 30 may be subsequently formed, by means of a burner, and an exhaust tube 31 sealed to the edge of such hole. It is also possible to produce the hole 30 at the same time as the sealing disc is punched out. Alternatively, the exhaust tube hole 30 in the sealing disc can be produced by heating an exhaust tube fused at one end to the center of the disc and closed at its other end,

the hole resulting from the expansion of the heated air trapped within the closed exhaust tube out through the plastic glass at the center of the disc.

What I claim as new and desire to secure by Letters Patent of the United States is:

1. The method of making stems for electric lamps and similar devices which comprises preliminarily fusing a coating of glass on intermediate portions of a plurality of lead-in wires, forming plastic glass into a ribbon and then forming stems from successive portions of the ribbon by punching blanks therefrom and simultaneously inserting the lead-in wires through the blanks to embed the coated portions thereof in the said blanks.

2. The method of making stems for electric lamps and similar devices which comprises preliminarily fusing a coating of glass on intermediate portions of a plurality of lead-in wires, heating a rod of glass to a plastic condition and compressing it into a ribbon and then forming stems from successive portions of the ribbon by punching blanks therefrom and simultaneously

inserting the lead-in wires through the blanks to embed the coated portions thereof in the said blanks.

ERICH MICKLEY.

REFERENCES CITED

The following references are of record in the file of this patent:

UNITED STATES PATENTS

Number	Name	Date
314,828	Haines	Mar. 31, 1885
333,028	Stanley	Dec. 22, 1885
805,963	Jackson	Nov. 28, 1905
1,770,335	Fuwa	July 8, 1930
1,831,144	Shearer	Nov. 10, 1931
2,030,186	Rose	Feb. 11, 1936
2,114,869	Bol et al.	Apr. 19, 1938
2,277,150	Scharfnagel	Mar. 24, 1942

FOREIGN PATENTS

Number	Country	Date
720,083	Germany	Apr. 23, 1942