Nov. 24, 1970 F. G. DEDEK 3,542,620

FABRICATION OF A PRINTER DRUM

Filed Nov. 15, 1967

Fig. 1.

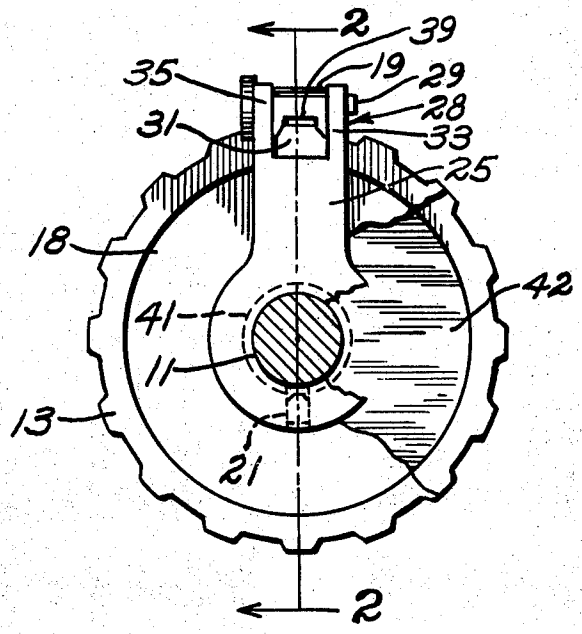

Fig. 2.

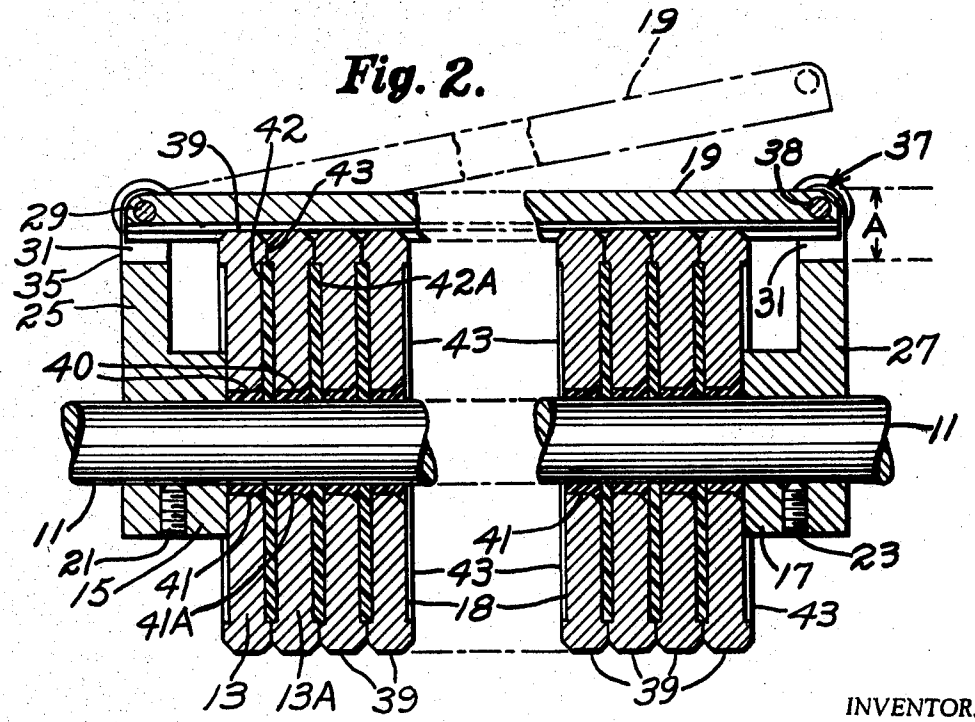

INVENTOR.
FRANK G. DEDEK.

BY
Russel C. Wells.

ATTORNEY.

United States Patent Office 3,542,620 Patented Nov. 24, 1970

3,542,620

FABRICATION OF A PRINTER DRUM

Frank G. Dedek, Westland, Mich., assignor to Burroughs Corporation, Detroit, Mich., a corporation of Michigan

Filed Nov. 15, 1967, Ser. No. 683,188
Int. Cl. B32b 31/00
U.S. Cl. 156—293 1 Claim

ABSTRACT OF THE DISCLOSURE

A method of fabricating a printing drum comprising a shaft and a plurality of type-carrying discs axially mounted thereon. Each disc carries a plurality of type characters spaced around its periphery. Each disc is bonded to the shaft by a layer of bonding material, such as an epoxy, between the disc and the shaft. Each disc is further bonded by an adhesive film placed between adjacent discs. Both the bonding material and the adhesive film are then cured. Before curing, corresponding type characters on each disc are aligned to every other disc. Alignment is performed at the type characters to assure accuracy.

BACKGROUND OF THE INVENTION

Field of invention

The invention relates generally to printing drums particularly and to a method of fabricating a plurality of type discs and shaft into a printing drum unit.

Description of prior art

At present, the method of fabricating printing drums includes the keying of a number of type carrying discs to a shaft. In fabricating the key and cutting the keyway for a printing drum, the cost is exorbitant because a high degree of accuracy in machining must be maintained if the type are to align. The angular location of a keyway in the center of a printing disc with the type character on the periphery of the disc is extremely difficult to maintain and result in frequent scraping of the parts. A tolerance of .0005 inch in the keyway location generally results in a character tolerance of from two to five times that amount, depending on the size of the disc.

SUMMARY OF THE INVENTION

This invention resides in bonding together several type-carrying discs on a shaft which together comprise a printing drum. This method of fabricating a printing drum provides for accurate alignment of each type character in rows parallel to the shaft by aligning at the periphery of the disc instead of by key and keyway connections at the periphery of the shaft.

It is therefore, a principal object of this invention to eliminate keys and keyways for locating printing discs along a mounting shaft.

A further object of this invention to reduce the cost of fabricating printing drum assemblies by eliminating the need for close tolerances on the mounting surfaces of the several discs comprising a printing drum assembly.

DESCRIPTION OF FIGURES

The invention will best be understood by reference to the following detailed description taken in connection with the accompanying drawings, in which:

FIG. 1 is a end view of a printing drum showing the type aligning bail in position;

FIG. 2 is a sectional view taken along the line 2—2 of FIG. 1.

DETAILED DESCRIPTION

Referring to the drawings by characters of reference, there is shown in FIG. 1 a printing drum unit comprising a shaft **11** and a plurality of centrally apertured type discs **13** positioned on the shaft. A pair of clamps **15** and **17** are indicated on either side of the type discs **13** holding the apparatus together. Also, there is shown one form of an aligning bail **19** for aligning the type of the discs **13** in rows, the bail being supported on the shaft as shown.

The clamps **15** and **17**, shown in FIG. 2, are slideably mounted on shaft **11** and are secured by any suitable means, such as set screws **21** and **23**. The purpose of the clamps is to hold the type discs together in a drum-like fashion until the fabricating process has been completed. Mounted to each clamp **15** and **17** are a pair of arms **25** and **27** which extend away from the shaft **11** to support the aligning bail **19**. The outboard end **28** of the arm **25** is bifurcated to form a locating channel **31** for the aligning arm **19**. The aligning arm **19** is rotatably mounted on the hinge pin **29** which is securely located in the arms **33** and **35**. The depth A of the channel **31** is sufficient to allow the aligning bail to freely pivot about the hinge pin. In a similar manner, the outboard end **37** of arm **27** is also bifurcated to locate the aligning bail **19** by a pin **38**.

In FIG. 1, the aligning bail is shown as having an U shaped cross-section which locates on either side of a type face **39**. Such a type face may represent the letter "O" which generally has parallel sides. As shown in FIG. 1, the aligning bail locates along the top and bottom parallel sides of the letter.

Each type disc **13** is cylindrical in shape having broad parallel sides and having a plurality of type characters around its periphery. The width of the type disc assures that when two or more discs are in an abutting relationship, the distance from character to character on the type discs is within the requirement of the printing drum. The broad sides of each type disc have an undercut area or recess **18** between the mounting hole **41** and the periphery. The mounting hole **41** is concentric with the periphery of the disc. A countersink is formed at each end of the mounting hole. Thus, the disc **13** is shaped like a wheel having a wide rim and a wide center hub, both parallel to the axis of the disc with a reduced web interconnecting the two.

With the previous described clamping and aligning apparatus, the following steps complete the method of fabrication. First, the clamp **15** and the arm **25** are securely mounted at one end of the shaft **11**. A type disc **13** is located on the shaft by means of its mounting hole **41**. The first type disc is placed adjacent to and in contact with the clamp **15**. A small amount of liquid bonding material **40**, such as a thermally curable liquid epoxy, is applied to the mounting hole **41** and the periphery of the shaft **11** through the countersink. Next, one or more sheets of a suitable thermosetting adhesive film **42** is located on the shaft **11** and in the recess **18** of the type disc **13**. The reason for using an adhesive film in this application as opposed to a liquid form of bonding material, is to prevent the bonding material from flowing outward and adhering to the face of the type characters. A second disc **13A** is then located on the shaft and is positioned against the inner surface **43** of the preceding type disc **13**. A small amount of epoxy is then added to the mounting hole **41A** and along the shaft **11**. Then a second piece of adhesive film **42A** is mounted on the shaft and against the type disc **13A**. This process is continued until the desired number of type discs are assembled on the shaft. After assembling the last type disc, the clamp **17** is then located on the shaft to contain the assembled type discs in an abutting relationship

to each other to maintain a pressure contact between each disc. The aligning bail **19** is then brought into place along the selected type character **39**, as shown in FIG. 2. The pin **38** is placed in the arm **27** and through the aligning bail securing it into position.

The step of aligning is accomplished at the type faces when all of the type discs are mounted on the shaft **11**. There is no need to rely upon the quality of individual machining of the mounting holes in each type disc to have the type faces in proper alignment. The adhesive film **42** between each disc securely bonds each disc to each other disc, and the liquid epoxy **40** in the mounting holes **41** securely bonds the discs **13** to the shaft.

The assembled unit is then cured. Curing may take place at an elevated temperature, such as 330° F., for a time period of 30 minutes if the previously mentioned bonding materials are used. The time and temperature of curing is solely dependent upon the type and kind of bonding material used. After the step of curing, the aligning bail **19**, the clamps **15** and **17** including the arms **25** and **27** are removed from the apparatus and the printing drum is completed.

While we have shown one particular apparatus, the aligning bail, for aligning the several type discs, there are many means which are equally satisfactory. One such means is to assemble the several type discs with the use of a magnifying projector and visually locate adjacent type characters. In order to do this, the bonding material selected should be somewhat tacky so as to hold each disc while the drum is being assembled and aligned.

Another way of aligning the type discs is to use a bail having an impression of a character in the desired axial spaced relationship of the finished drum. The character on each type disc may be accurately located in the impression and the several type discs accurately aligned one to the other.

It will be apparent that many changes and modifications of the several features described herein may be made without departing from the spirit and scope of the invention. It is, therefore, apparent that the foregoing description is by way of illustration of the invention rather than limitation of the invention.

What is claimed is:

1. A method of fabricating a printing drum comprising the steps of:

forming like type characters on the periphery of each of a plurality of annular discs,

placing the type discs concentrically on a shaft,

applying a predetermined amount of a thermally curable liquid adhesive between the periphery of the shaft and the inner periphery of each annular disc,

placing a predetermined number of annular sheets of thermosetting adhesive film respectively between the adjacent sides of the discs,

rotating the discs to move the characters into abutting relation with a straight edge parallel to the axes of the disc while the liquid adhesive and adhesive film is uncured, and then

thermally curing both adhesives to form a bond between the periphery of the shaft and the inner periphery of each disc and between each adjacent disc.

References Cited

UNITED STATES PATENTS

1,576,726	3/1926	Davis	156—294 X
2,423,869	7/1947	Blessing	156—60
3,128,693	4/1964	Thiemann	101—93
3,184,355	5/1965	Brown	156—294 X
3,222,234	12/1965	De Jean et al.	264—262

REUBEN EPSTEIN, Primary Examiner

U.S. Cl. X.R.

29—464