April 26, 1949. O. WENNBERG 2,468,717

AUTOMATIC MULTIPLE TWISTING MACHINE

Filed Aug. 14, 1945 6 Sheets-Sheet 1

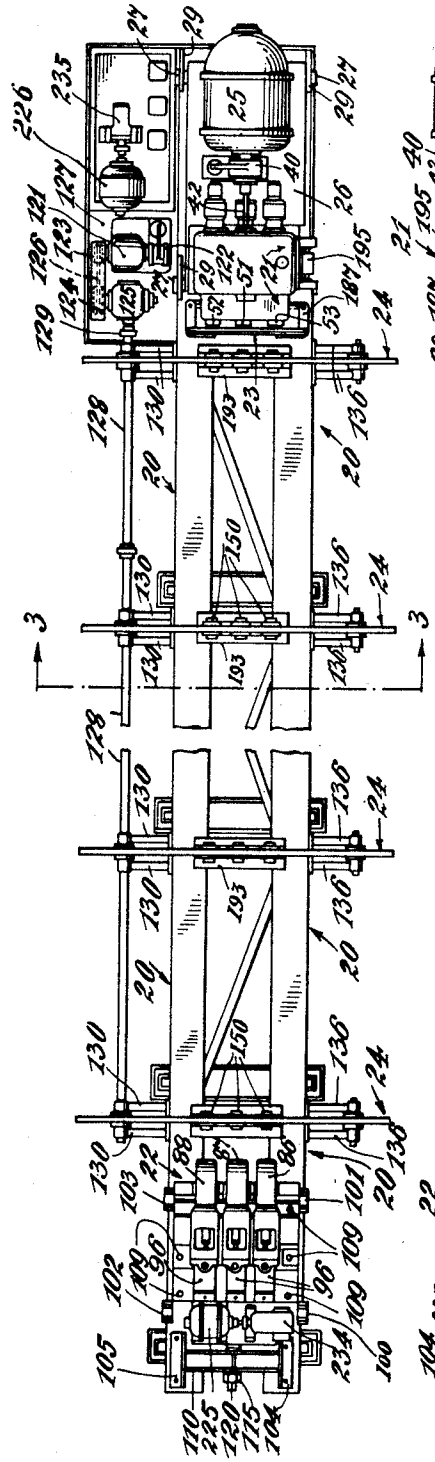

Fig. 1.

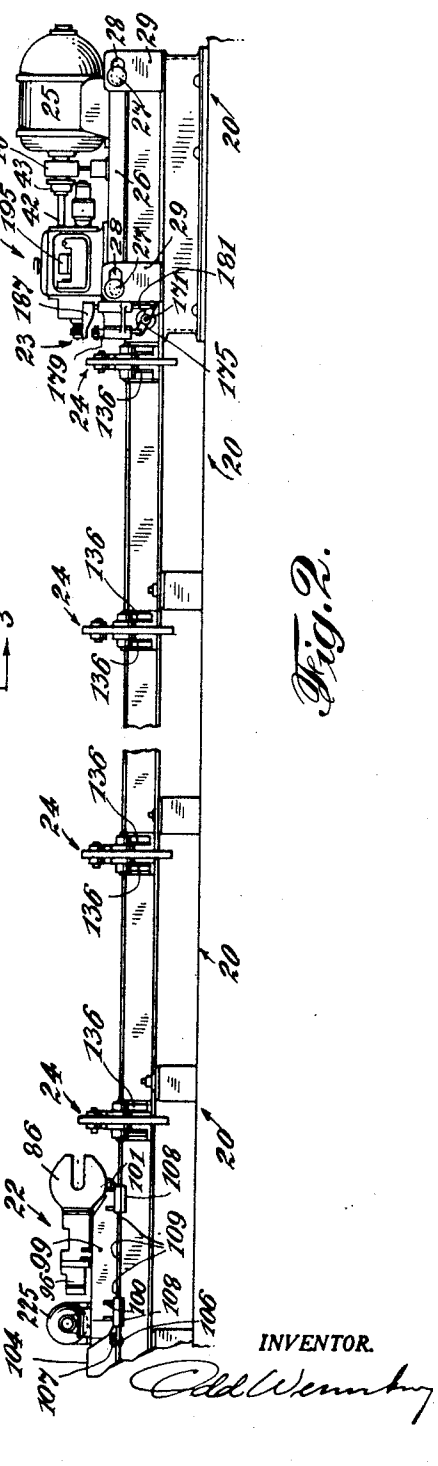

Fig. 2.

INVENTOR.

Odd Wennberg

April 26, 1949. O. WENNBERG 2,468,717

AUTOMATIC MULTIPLE TWISTING MACHINE

Filed Aug. 14, 1945 6 Sheets-Sheet 2

Fig. 3.

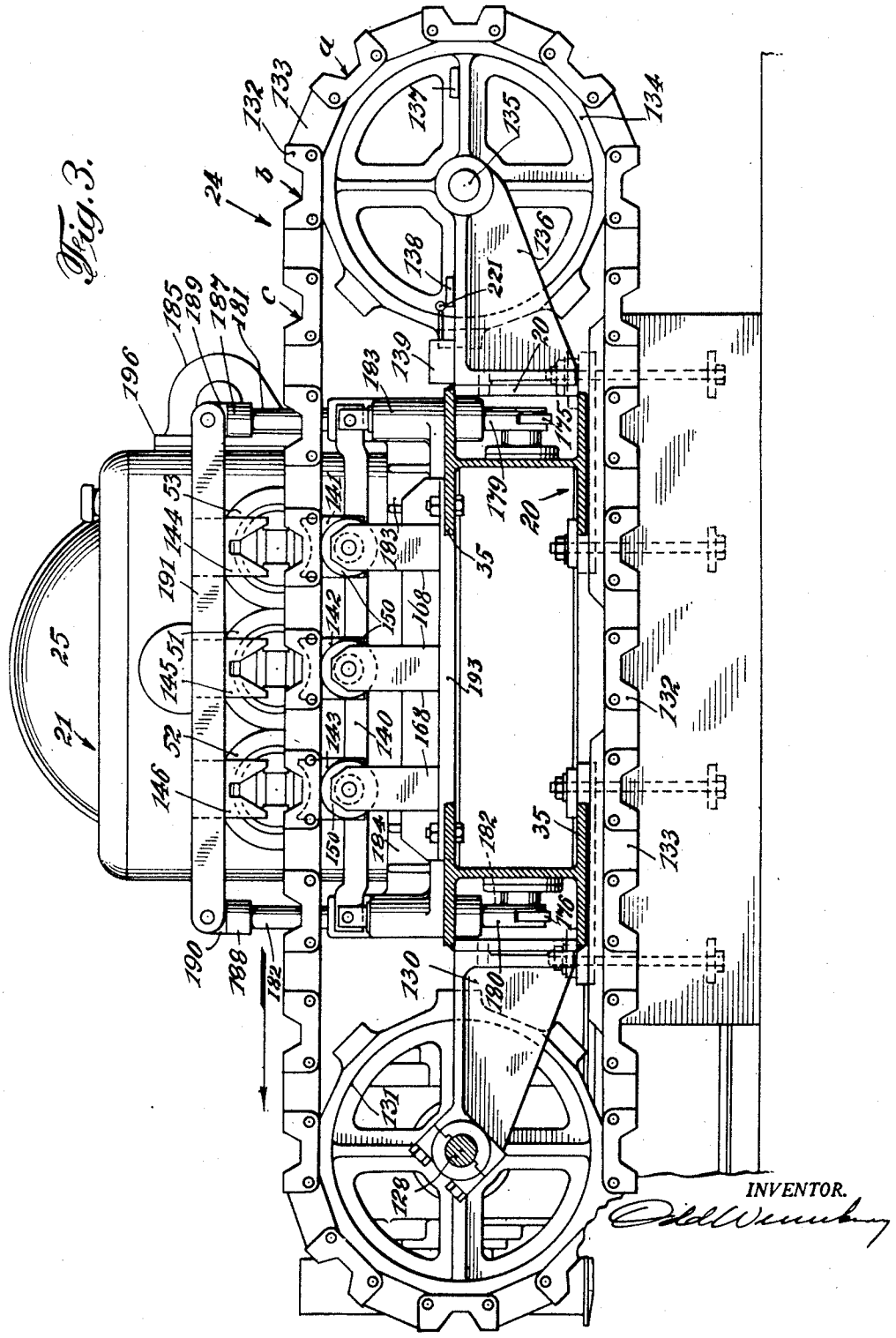

April 26, 1949. O. WENNBERG 2,468,717

AUTOMATIC MULTIPLE TWISTING MACHINE

Filed Aug. 14, 1945 6 Sheets-Sheet 3

Fig. 4.

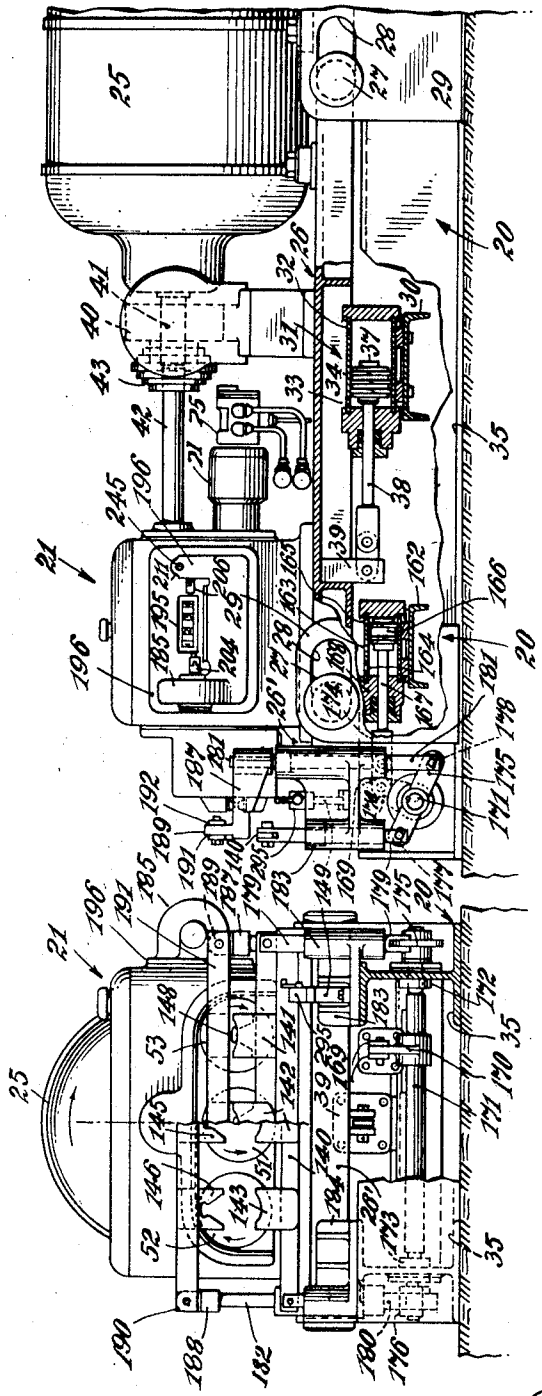

Fig. 5.

INVENTOR.

Oddl Wennberg

April 26, 1949. O. WENNBERG 2,468,717

AUTOMATIC MULTIPLE TWISTING MACHINE

Filed Aug. 14, 1945 6 Sheets-Sheet 4

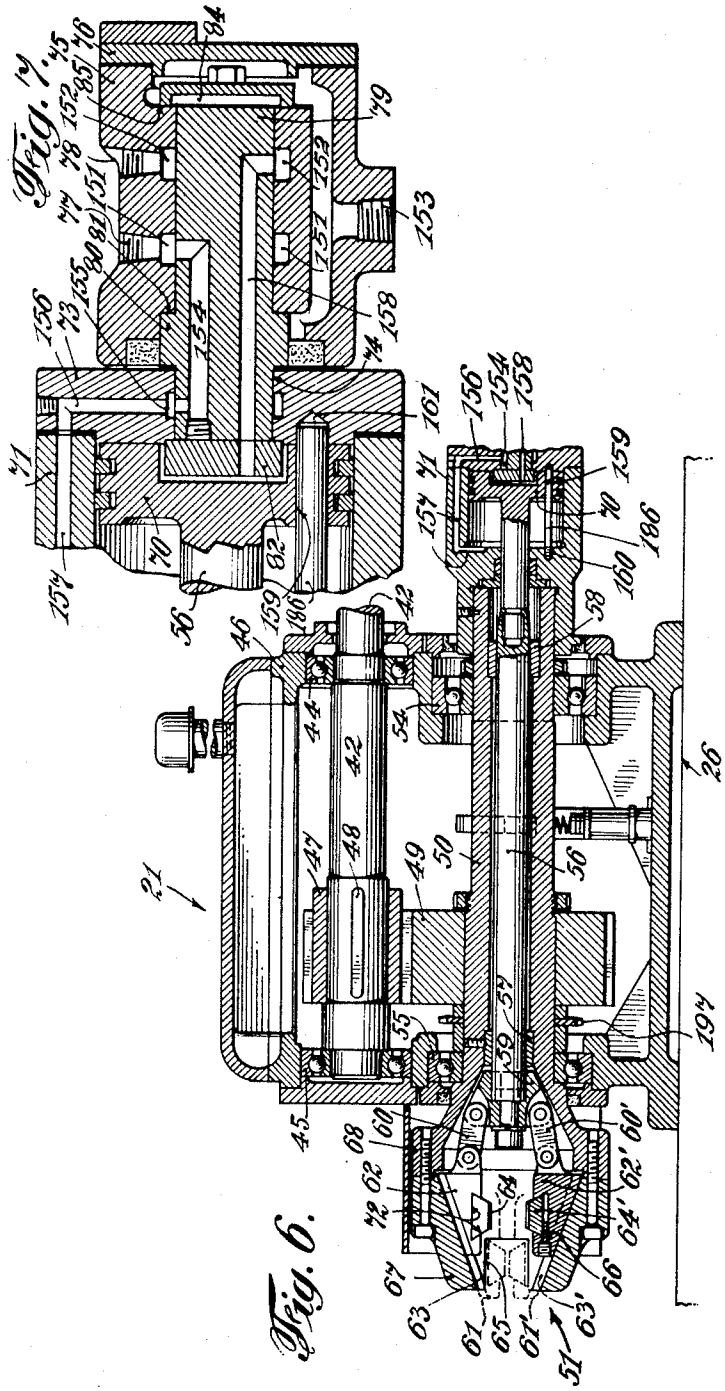

Fig. 7.

Fig. 6.

INVENTOR

Odd Wennberg

April 26, 1949. O. WENNBERG 2,468,717

AUTOMATIC MULTIPLE TWISTING MACHINE

Filed Aug. 14, 1945 6 Sheets-Sheet 5

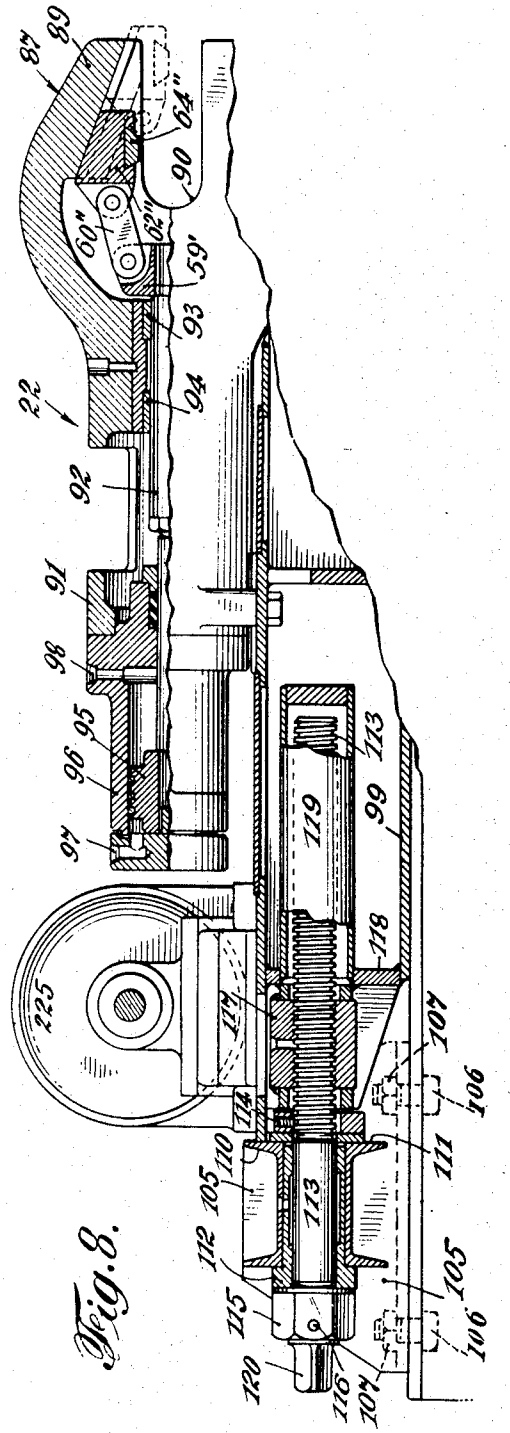

Fig. 8.

Fig. 10.

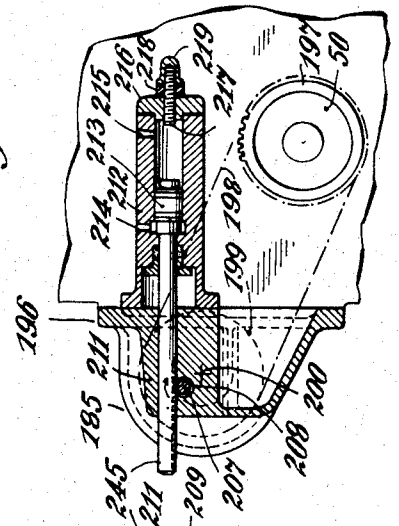

Fig. 9.

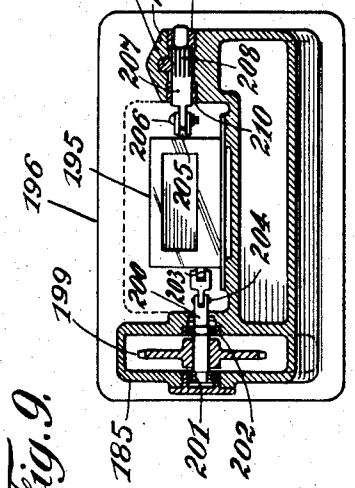

INVENTOR.

Oscar Wennberg

April 26, 1949. O. WENNBERG 2,468,717

AUTOMATIC MULTIPLE TWISTING MACHINE

Filed Aug. 14, 1945 6 Sheets-Sheet 6

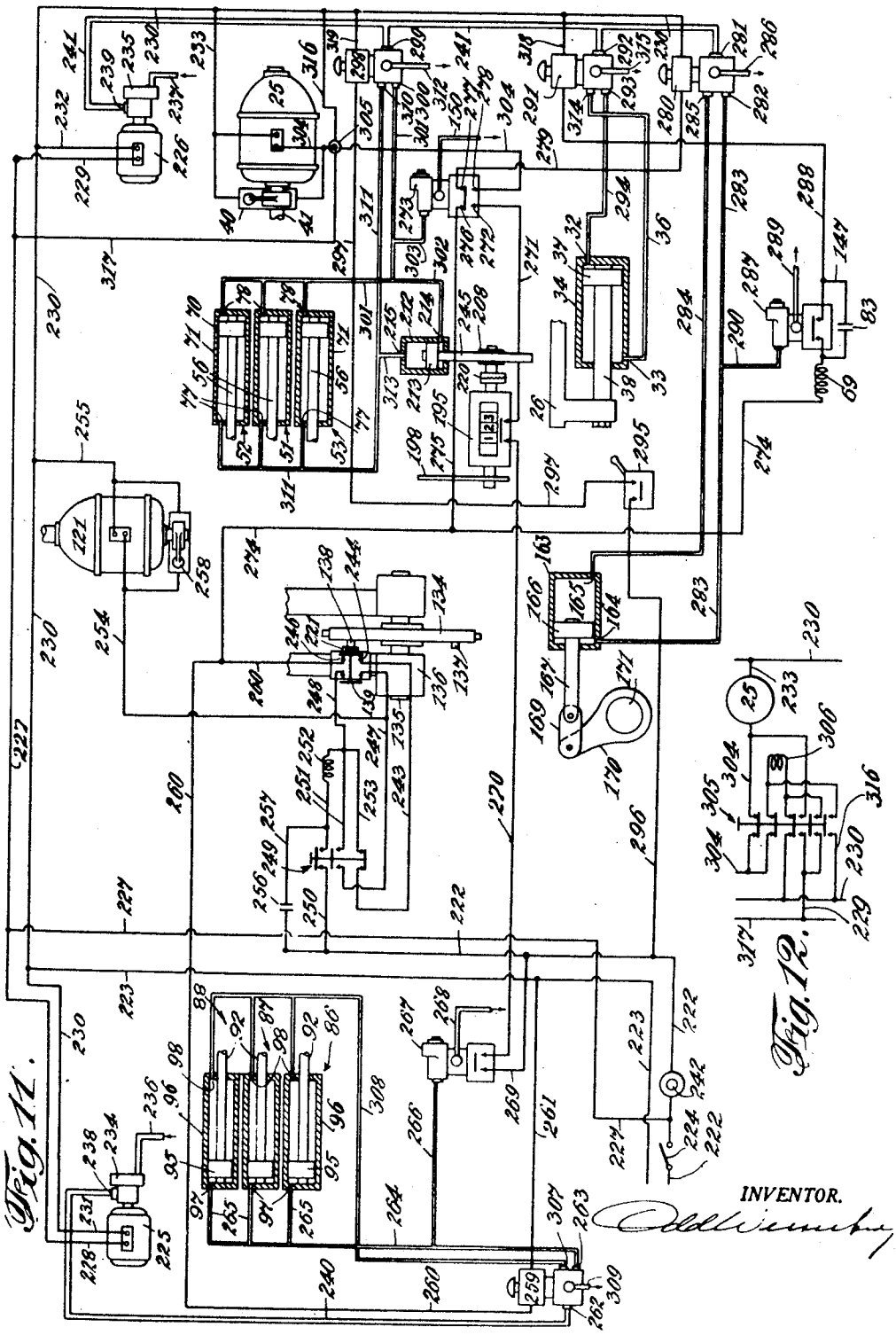

Fig. 11.

Fig. 12.

INVENTOR.

Patented Apr. 26, 1949

2,468,717

UNITED STATES PATENT OFFICE

2,468,717

AUTOMATIC MULTIPLE TWISTING MACHINE

Odd Wennberg, Manhasset, N. Y.

Application August 14, 1945, Serial No. 610,713

16 Claims. (Cl. 153—78)

1

This invention relates to machines for twisting metallic bars or rods and, more particularly, for helically twisting and stretching steel bars or rods for use in concrete reinforcement and the like, as shown, for example, in U. S. Patent No. 2,142,758 to Andrea Ossoinack and U. S. Patent No. 2,256,060 to Joseph D. Stites.

The object of the present invention is to provide a machine for twisting a plurality of such bars simultaneously whose operation is substantially automatic and whereby the twisting of the bars or rods will be effected with maximum efficiency. The invention contemplates the provision of novel mechanisms and controls by which the twisting operation is automatically controlled in accordance with predetermined requirements.

A further object is to provide a multiple twisting mechanism in which the clamping means clamping one end of the bars or rods to be twisted remain stationary during the twisting operation while the twisting heads clamping the opposite ends of said bars or rods are rotatable and moved into twisting position by hydraulic means.

Another object of the present invention is to provide novel clamping and twisting heads from which the jaws may be easily and quickly removed without dismantling the heads proper.

With these and other objects in view, to be pointed out in the specification and especially in the appended claims, one form of a multiple twisting machine, in which the invention may be conveniently embodied in practice for twisting three bars simultaneously, has been illustrated in the accompanying drawings, in which:

Fig. 1 is a plan view of a complete multiple twisting machine, showing the headstock with the rotatable twisting heads, lifting mechanism, conveyors, and tailstock with the stationary clamping heads in their respective spaced relationship.

Fig. 2 is a front elevation of the machine, shown in Fig. 1.

Fig. 3 shows an enlarged section through the machine on line 3—3 of Fig. 1, illustrating in greater detail the conveyors for the bars to be twisted, the rotatable twisting heads, and the lifting mechanism.

Fig. 4 is an enlarged front elevation, partly in section, of the headstock carrying the rotatable twisting heads.

Fig. 5 depicts an end view of the headstock shown in Fig. 4.

Fig. 6 is a still further enlarged fragmentary sectional front view of one of the rotatable twisting heads with part of the hydraulic motor for opening and closing the jaws.

2

Fig. 7 is an enlarged fragmentary sectional view of the remainder of the hydraulic motor, part of which is shown in Fig. 6.

Fig. 8 is an enlarged fragmentary and partially sectional front view of the stationary clamping heads mounted on the tailstock of the machine.

Fig. 9 is a partially sectional front view of the counting device, which is attached to the headstock.

Fig. 10 is a sectional end view of the counting device, shown in Fig. 9, and its hydraulic resetting mechanism.

Fig. 11 is a diagrammatic view which shows the electric and hydraulic circuits and controls in connection with the complete layout.

Fig. 12 shows diagrammatically and in greater detail the arrangement and wiring of a reversing switch employed in the electric circuit illustrated in Fig. 11.

Referring to Figs. 1 and 2, the multiple twisting machine shown is adapted for twisting a plurality of bars or work-pieces simultaneously in a successive series of operations and consists primarily of a main frame 20; a twisting station, which comprises a tailstock 22 with clamping heads 86, 87, and 88 for engaging one end of the bars, a headstock 21, carrying rotatable clamping heads 51, 52, and 53 adapted to grip the opposite ends of said bars at a level contrasting to the level of the first clamping heads, and a lifting and centering device 23, adjacent to headstock 21, adapted to lift and locate said opposite ends of the bars in alignment with the rotatable clamping heads; and a multiplicity of electrically-actuated, transverse and spaced-apart conveyors 24 for receiving and conveying the bars to predetermined positions at said twisting station.

Headstock

Figs. 3, 4, and 5 show in greater detail headstock 21, which is mounted on sub-base 26, adapted to be moved along main frame 20 to locate headstock 21 in clamping and twisting relationship to the ends of the bars to be twisted. The longitudinal movement of sub-base 26 is guided by flanged pins 27 in recesses 28 of brackets 29, suitably fastened to main frame 20 near each of the four corners of sub-base 26. A channel section 30, or the like, transversely extending between longitudinal H-beams 35 of main frame 20 and suitably attached thereto, carries a hydraulic motor 31 for shifting headstock 21 on sub-base 26 with respect to lower base 20. Hydraulic

motor 31 comprises a cylinder 34 with front and rear ports 33 and 32, respectively. Piston 37, in slidable engagement with said cylinder 34, carries piston rod 38, which is pivotally connected to bracket 39, conveniently fastened to sub-base 26.

Pressure fluid is supplied by a hydraulic pump 235, operatively connected with electric motor 226, both of which are secured to oil tank 127, which forms a part of or is suitably connected to lower base 20. When pressure fluid is directed into rear port 32 of hydraulic motor 31, piston 37 will be urged to the left and move sub-base 26, carrying headstock 21, into its working position, which is reached when front face 26' of said sub-base 26 comes to rest against the rear faces of brackets 183 and 184, fast to base 20 (Figs. 4 and 5). In this position, sub-base 26 actuates a limit switch 295, mounted on a bracket 149, which is shown fastened to stop or bracket 183.

An electric motor 25, with its spring-set magnetic brake 40, is carried on sub-base 26. Power shaft 41 of motor 25 is operatively connected with input shaft 42 of headstock 21 by coupling 43. Shaft 42 is rotatably supported in bearings 44 and 45, respectively, in rear and front walls of gear box housing 46 and carries a pinion 47, suitably fastened thereto by key 48 or the like (Fig. 6). Said housing 46 is secured to sub-base 26 in any suitable manner. Pinion 47 meshes with a gear 49, fixedly connected to a hollow spindle 50, which forms part of the rotatable, centrally located twisting head 51. Twisting heads 52 and 53, respectively, arranged in the same horizontal plane as twisting head 51 (Fig. 3), are of identical arrangement as twisting head 51. Their respective drive gears, which have the same number of teeth and the same pitch as gear 49 of twisting head 51, mesh with said gear 49 on respective opposite sides thereof. Consequently, since the rotating direction of twisting head 51 (Fig. 5) is in counter-clockwise direction, the rotation of twisting heads 52 and 53 will be in clockwise direction.

Spindle 50 is rotatably held in bearings 54 and 55, respectively, which are mounted in opposite walls of housing 46 and in the same vertical plane as said input shaft 42, but somewhat lower, consistent with the pitch diameters of pinion 47 and gear 49.

A shaft 56 is slidably mounted in annular bushings 57 and 58 in hollow spindle 50 (Fig. 6) and carries at its left end a pivot bracket 59, fastened thereto in any convenient manner. Jaw-holder actuating links 60 and 60', respectively, pivotally connect said bracket 59 to upper and lower jaw-holders 62 and 62', respectively, whose flanged inclined surfaces 61 and 61' are adapted for sliding engagement with corresponding recesses 63 and 63' in spindle head 67, suitably fastened to the left, enlarged end 68 of spindle 50 by means of bolts or the like. Wedge-shaped jaw-holders 62 and 62' are provided with dovetail-shaped transverse recesses 72, in which similarly shaped jaws 64 and 64' are suitably fastened by means of screws, such as 66 shown for the lower jaw 64' in Fig. 6. The gripping edges of jaws 64 and 64' and their general shape are designed preferably as disclosed in Fig. 8 of my U. S. Patent No. 2,217,-301. Shaft 56 depends from a piston 70, slidable in a cylinder 71, which may form a part of or be fixedly connected to hollow spindle 50 at its right-hand end; hence, cylinder 71 will participate in any rotary movement of hollow spindle 50.

Cover 73 is bolted to or otherwise suitably connected with cylinder 71 and is provided with a circular bore 74 co-axial with shaft 56. A cylindrically shaped housing 75, with its end cover 76, pressure ports 77 and 78 and drain port 153, carries a pintle 79 in rotatable engagement. Drain port 153, with suitable piping back to tank, serves to take care of any leakage between housing 75 and pintle 79. Pintle 79 extends through bore 74 of cover 73. The left face of flange 80 of pintle 79 is clamped against cover 73 by member 82. The right face of flange 80 slidably engages a corresponding shoulder 81 of housing 75. At its opposite end, pintle 79 is located against lateral movement with respect to cylinder 75 by lock washer 84, which is in slidable engagement with a face 85 of cylinder 75.

To close the open jaws 64 and 64', shown in solid lines in Fig. 6, in order to bring them into the position shown in dotted lines, the pressure fluid is pumped through port 78 and annular passage 152 in cylinder 75 to passage 158 in pintle 79, exerting pressure against the right-hand end of piston 70 and thereby pushing it towards the left. The fluid in cylinder 71 to the left of the piston will be forced back to tank at negligible pressure through communicating passages 157 and 156 in cylinder 71 and cover 73, respectively, annular groove 155 in cover 73, passage 154 in pintle 79, annular groove 151 in cylinder 75, and port 77.

To open the jaws (piston 70 now being in its extreme left position), pressure fluid is directed through port 77, annular groove 151, passages 154, 156, and 157, thereby urging piston 70 towards the right until it has again reached the position shown in Fig. 6. The fluid to the right of piston 70 will be discharged to tank through passage 158, annular groove 152, and port 78.

Spindle 50 is rotated during certain predetermined periods in the operating cycle. Cylinder 71 and pintle 79 will participate in any such rotation of spindle 50. However, housing 75 will remain stationary at all times, because pintle 79 is in rotatable engagement with housing 75. In order to guide slidable piston 70 and to prevent any relative angular movement between the latter and cylinder 71, a suitable guide pin 186 is in slidable engagement with corresponding bore 159 of piston 70 and located in recesses 160 and 161 of cylinder 71 and cover 73, respectively.

The front face of conically shaped spindle head 67 is preferably provided with a transverse recess or slot 65 of sufficient size, and adapted to permit removal of the jaws 64 and 64' in their closed position after loosening holding screws 66, without dismantling the mechanism, thereby facilitating an easy and quick change of these gripping jaws, which inherently are subject to considerable wear and may require frequent replacement.

Tailstock

The tailstock 22 rests on main frame 20 at the end opposite of headstock 21 and comprises three clamping heads 86, 87, and 88, as shown in Fig. 1, each of which is in the same vertical plane as its corresponding rotatable twisting head 53, 51, and 52, respectively, but in a slightly lower horizontal plane than the latter, the reason for which will be more fully explained hereinafter. The clamping heads 86, 87, and 88, as well as hydraulic pump 234, operatively connected with electric motor 225, are secured in any suitable manner to the right-hand part of a sub-base 99, which is

completely enclosed and serves as a tank or reservoir for pump 234. It should be noted that a separate fluid pressure source is provided near the tailstock for practical reasons only, namely, to keep the hydraulic piping to a minimum. If desired, all hydraulic motors and controls of the machine may be supplied by one fluid pressure source. The right-hand portion of sub-base 99 is provided with brackets 100, 101, 102, and 103 to fasten the same detachably to main frame 20 by means of clamping gibs 108, bolted to brackets 100, 101, 102, and 103, respectively, or by any other convenient clamping means. Brackets 104 and 105, forming the left portion of sub-base 99, may be anchored to base 20 in any suitable manner, such as by several bolts 106 and nuts 107, as shown. These bolts 106 may extend through brackets 104 and 105, respectively, as well as through the flanges of H-beams 35 of main frame 20.

Tailstock 22 may be selectively anchored at different spaced-apart points along main frame 20 to accommodate varying lengths of bars. For roughly adjusting tailstock 22 along base 20, the top surface of the latter may be provided with a series of holes 109, suitably spaced apart, as shown in Fig. 2. When moving tailstock 22 on sub-base 99, bolts 106 and nuts 107 are removed and gibs 108 loosened. Sub-base 99 then may be moved along main frame 20 into any position where bolt holes in brackets 104 and 105 and holes 109 of base 20 are in alignment; gibs 108 are then tightened and brackets 104 and 105 anchored to base 20 by means of bolts and nuts 106 and 107. It will be understood, however, that this adjustment may only roughly give the desired distance between headstock and tailstock.

Anchoring brackets 104 and 105 are rigidly interconnected by upper and lower cross-members 110 and 111, between which bearing 112 is fixed substantially in the longitudinal center line of the machine (Fig. 8). Partly threaded shaft 113 is rotatably mounted in bearing 112 and located against longitudinal movement relative to bearing 112 by locking collar 114 on the right-hand side and by abutting nut 115 on the left side of bearing 112. Abutting nut 115 may be fixedly connected to shaft 113 by pin 116 or other suitable means. The right-hand threaded portion of shaft 113 cooperates with a similarly threaded nut 117, fixedly attached to sub-base 99, as shown, or in any other convenient manner. Threaded shaft 113 extends into the interior of sub-base or oil tank 99, but is separated from the oil by chamber 119, adapted to receive shaft 113 through a suitable opening in rear wall 118 of sub-base 99. It will be noted that shaft 113, terminating at its left end in a square section 120, forms a rigid but adjustable link, which connects the left-hand structure, including brackets 104 and 105, with the right-hand part of sub-base 99, carrying stationary clamps 86, 87, and 88 and pump 234 with electric motor 225.

As previously pointed out, a rough adjustment of tail-stock 22 may be effected by moving the complete sub-base 99 into registry with suitable pairs of holes 109, provided along the main frame 20. Since the length of the threaded portion of shaft 113 is in excess of the distance between adjacent holes 109 in frame 20, clamps 86, 87, and 88 may be placed in any desired position on main frame 20 by turning square end 120 of shaft 113, whereby the relative distance between the right and left-hand parts of sub-base 99 is changed.

The bars to be twisted are loaded on conveyors 24, to be fully described hereinafter, and fed sideways into clamping heads 86, 87, and 88 in such a manner that their end portions will extend a substantial distance into transverse recesses 90 in the face of the housings, such as 89, shown in connection with clamping head 87 in Fig. 8, which is representative of all clamping heads. This is in contrast to twisting heads 51, 52, and 53, whose transverse recesses 65 need only be of sufficient size to permit convenient removal of jaws 64 and 64', because these twisting heads 51, 52, and 53 are shifted into clamping position over the end portions of the bars, thus obviating placing the bars inside jaws 64 and 64' by means of the conveying mechanism, as is done in connection with stationary clamping heads 86, 87, and 88. The clamping heads 86, 87, and 88 are arranged with gripping jaws 64'', jaw-holders 62'', and actuating links 60'', similar to those described heretofore in connection with the twisting heads of headstock 21. Pivot brackets 59' is fastened to shaft 92, slidable in annular bushings 93 and 94, mounted in a suitable circular bore of housing 89, and depends from piston 95, slidable in cylinder 96. The latter is fastened to the left flanged end 91 of housing 89 and includes fluid pressure ports 97 and 98 at its left and right end, respectively. When pressure fluid is directed through port 97, piston 95 will be moved towards the right, and the fluid in cylinder 96 to the right of piston 95 will be returned through port 98 to tank at negligible pressure. As a result, the gripper jaws 64'' will be closed on the end portions of the bars to be twisted and will be positioned as shown in dashed lines. Similarly, when the jaws are closed and pressure fluid is directed through port 98, the piston 95, which is now in its extreme right position, will be moved to its extreme left position, the fluid to the left of plunger 95 will be expelled through port 97 to tank, and the jaws 64'' opened to release the bars, as shown in solid lines in Fig. 8.

Conveyors

A number of feeding means or conveyors 24 are spaced along the main frame 20 between headstock 21 and tailstock 22 to support the bars to be twisted at intermediate points (Fig. 1). The end portions of the bars project beyond the conveyors located at the extreme right and left, respectively. The bars are suitably loaded in three successive carrier pockets *a*, *b*, and *c* on the right-hand side of the machine (Fig. 3) and fed into longitudinal alignment with twisting heads 53, 51, and 52 and clamping heads 86, 87, and 88, respectively, for clamping and twisting. The several receiving and conveying means 24 are all substantially alike, with their carrier pockets in longitudinal alignment, and are preferably driven by an electric motor 121, mounted on oil tank 127 and arranged with magnetic, spring-loaded brake 122 for quick stopping (Fig. 1). The output shaft of electric motor 121 carries a suitable pulley 123 and is in driving connection with pulley 124 of speed reducer 125 by means of V-belts 126. The several conveyors 24 are driven by a common shaft 128, extending from the speed reducer 125 parallel and to one side of main frame 20 and connected to speed reducer 125 by coupling means, such as 129. Shaft 128 is journalled along its length in suitable brackets 130, solidly fastened to base 20.

A representative feeding mechanism is shown

enlarged and in greater detail in Fig. 3. Between two adjacent brackets 130 a sprocket wheel 131 is fixed to drive shaft 128. An endless chain, formed by carrier links 132, having receiving pockets, such as *a*, *b*, and *c*, and connecting links 133, extends transversely of the machine and engages driving sprocket 131 and idling sprocket 134, located on the opposite side of the machine and carried by idler shaft 135, journalled in two adjoining brackets 136. The endless chain, consisting of carrier links 132 and connecting links 133, has a natural tendency to sag between driving sprocket 131 and driven sprocket 134. To guard against any undesired sagging and to locate carrier links 132 when in line with the twisting heads 53, 51, and 52 and with clamping heads 86, 87, and 88, respectively, supporting rolls 150 are arranged which engage the lower surface of the endless chain and which are journalled in brackets 168. As shown in Fig. 3, the brackets 168 may be carried by a cross-member 193, fastened to the upper flanges of H-beams 35.

It will be noted that one pocket remains empty between the three pockets in alignment with the twisting heads and the loading pockets *a*, *b*, and *c*. Consequently, in order to convey the bars loaded into pockets *a*, *b*, and *c* into alignment with twisting heads 53, 51, and 52, respectively, it will be necessary for the endless chain to advance a distance equivalent to four pockets during each operating cycle, and for this reason driving sprocket 131 and idler sprocket 134 are provided for convenience with a multiple of four teeth each, or, for instance, with eight teeth each, as shown. To stop electric driving motor 121, when the loaded pockets *a*, *b*, and *c* are in registry with twisting heads 53, 51, and 52, respectively, the idler sprocket 134 is provided with two diametrically spaced-apart cams 137 and 138, which are adapted to actuate alternately arm 221 of a spring-returned limit switch 139, as will be fully described hereinafter. After the twisted rods have been released by the jaws in twisting heads 53, 51, and 52, they drop into the pockets of the endless chain in registry with these heads, and when a new batch of untwisted rods is advanced into alignment with the twisting heads, the previously twisted rods are carried by the conveyor to the left or unloading side of the machine, where they may be dropped in a chute (not shown) or taken off by hand, as desired.

As shown in Fig. 3, the bottoms of the pockets in carrier links 132 are located somewhat below the level of the horizontal center line of the rotatable twisting heads 53, 51, and 52, but at approximately the same level as the stationary clamps 86, 87, and 88 (Fig. 2), so that the bars are fed directly into clamping position relative to the latter. Hence, when the bars are gripped in the stationary clamps and in the rotatable twisting heads, they will be at a slight slope during the twisting operation and are therefore prevented from chafing on the pockets in links 132 of conveyors 24. It must be realized that one end of the bars is held fixed during the twisting operation by means of the stationary clamps 86, 87, and 88. The twisting force is exclusively provided by the rotatable twisting heads 53, 51, and 52, which may rotate at considerable speeds. The twisting torque of rotatable heads 53, 51, and 52 is transmitted through the whole bars, and, inasmuch as the clamps 86, 87, and 88 hold the ends of the bars stationary, the twisting deformation will begin there and will travel at a comparatively slow rate along the bars towards their rotating ends, which are gripped in the rapidly rotating twisting heads 53, 51, and 52. It is, therefore, desirable that no portion of the bars is in contact with the pockets of any of the conveyors 24 during the actual twisting operation, to avoid the previously described chafing, which might even cause the bars to break on account of the high stresses present due to the combined twisting and stretching action.

Centering device

After either one of cams 137 and 138 has stopped the conveyor motor 121 and, hence, the conveyors 24 by actuating limit switch 139, as previously described, the end portions of the bars adjacent to the twisting heads 53, 51, and 52 are lifted to the level of said twisting heads by means of lifting and centering device 23.

A structural member 162 (Fig. 4) extends between opposite sides of main frame 20 and rigidly supports a hydraulic cylinder 163, having left and right-hand pressure ports 164 and 165 and carrying a piston 166 in sliding engagement. Left-hand end 174 of piston rod 167, depending from piston 166, pivotally engages one end of connecting links 169, whose opposite ends pivotally engage a bell crank 170, fastened by a key or the like to a transverse rocker shaft 171, which is journalled in bearings 172 and 173, mounted in opposite sides of lower base 20 (Fig. 5). Double-ended rocker arms 175 and 176, fixed to the right and left ends, respectively, of shaft 171 and provided with two longitudinal slots each 177 and 178, are pin-connected on their one end to connecting rods 179 and 180 and on their other end to connecting rods 181 and 182, respectively. Brackets 183 and 184, serving also as stops for locating sub-base 26 in its working position, carry connecting rods 179 and 181 and connecting rods 180 and 182, respectively, in slidable and spaced-apart relationship. Lower cross-bar 140 rests in the fork-like upper ends of connecting rods 179 and 180 and is fixedly fastened thereto by bolts or the like. Connecting rods 181 and 182 have fastened to their upper ends brackets 187 and 188, respectively, which project longitudinally of the machine and end in vertically positioned bosses 189 and 190, whose center line is substantially in the same vertical plane as the axes of connecting rods 179 and 180; to each side of bosses 189 and 190, cross-bars 191 and 192 are suitably fastened by bolts or the like.

The lower cross-bar 140 carries three trough-shaped lifting members 141, 142, and 143 in alignment with rotatable twisting heads 53, 51, and 52, respectively. Each of these lifting members consists of two similarly shaped plates, fastened in pairs to the front and to the rear of cross-bar 140, respectively, forming between them a recess into which centering members 144, 145, and 146, suitably fastened between upper cross-bars 191 and 192 and having a substantially inverted V-shape, may extend for the purpose of centering and gripping the bars to be twisted, to locate the latter in cooperative relation to twisting heads 53, 51, and 52 during a certain operative period of the machine.

Fig. 4 shows the lifting mechanism in its closed and elevated position. When pressure fluid is admitted to port 165 of cylinder 163, piston 166 with piston rod 167 and links 169 will move to the left, and the fluid on the left-hand side of

piston 166 will be returned to tank through port 164. Bell crank 170 will be rotated in counter-clockwise direction, thereby rotating the double-ended rocker arms 175 and 176 also in counter-clockwise direction. In consequence, connecting rods 179 and 180, carrying the lower cross-bar 140 with trough-like lifting members 141, 142, and 143, will be lowered, and connecting rods 181 and 182, actuating cross-bars 191 and 192 with centering members 144, 145, and 146, will be raised. This position of the lifting or centering mechanism is illustrated in the view to the left of the center line of Fig. 5 and also in Fig. 3.

On the other hand, when pressure fluid is admitted to port 164, when piston 166 is in its extreme left position, the piston will be urged towards the right, and the liquid in the cylinder on the right-hand side of piston 166 will be returned to tank through port 165. Bell crank 170 and rocker arms 175 and 176 will be rotated in clockwise direction, thereby lifting connecting rods 179 and 180 with cross-bars 140 and lifting members 141, 142, and 143. Simultaneously therewith, connecting rods 181 and 182 will be lowered, thereby lowering cross-bars 191 and 192 with centering members 144, 145, and 146. As a result, the ends of the bars to be twisted will be raised and simultaneously centered and clamped in pockets, such as 148, formed between the upper centering members, such as 144, and the lower lifting members, such as 141. This raised and closed position of the centering device is shown most clearly in the view to the right of the center line in Fig. 5. The vertical and horizontal axes of pocket 148 coincide exactly with the respective center lines of their corresponding twisting heads. Consequently, when said twisting heads are moved into their clamping position at a certain predetermined point in the automatic sequence of operations, they will find the ends of the bars properly aligned for clamping.

Counter

A counting mechanism 195, operating in the conventional manner to count revolutions of the rotatable twisting heads 53, 51, and 52, is carried on bracket 196, fastened to the side of headstock 21 (Fig. 4). Counter 195, shown in greater detail in Figs. 9 and 10, derives its drive from an endless sprocket chain 198, passing over driving sprocket 197, fixedly mounted on spindle 50 (Fig. 6) of twisting head 53 and driven sprocket 199, carried by rotatable shaft 200, journalled in bearings 201 and 202, respectively, suitably mounted in housing 185, forming a part of bracket 196. Drive shaft 203 of the counter is operatively connected with shaft 200 by coupling means 204, or the like. A reset shaft 205 on the opposite side of the counter 195, adapted to reset said counter to zero, is similarly connected by coupling 206, or the like, with shaft 207, having a pinion 208 cut integral with it and being mounted in suitable bearings 209 and 210 of bracket 196. Rack-ended piston rod 245, slidably mounted at right angles to shaft 207 in a suitable bore of boss 211, forming part of bracket 196, is in mesh with pinion 208 and depends from piston 213, slidable in cylinder 212, which is bolted or otherwise fastened to the back of bracket 196 (Fig. 10). Said cylinder 212 has left and right-hand pressure ports 214 and 215, and its back cover 216 is provided with set-screw 217, lock nut 218, and acorn nut 219.

Counter 195 embodies a one-way clutch (not shown in Figs. 9 and 10) for reset shaft 205, adapted to effect resetting only when reset shaft 205 is rotated in clockwise direction, as viewed in Fig. 10. It will be understood that counter 195 is adapted to open an electric circuit after a predetermined number of revolutions has been recorded. It will close said electric circuit only when the counter has been reset to zero for arresting the twisting operation, as will be more fully explained hereinafter.

When directing pressure fluid into port 214, piston 213 will be urged to the right. The hydraulic fluid to the right of said piston 213 will be returned to tank through port 215, and rack-ended piston rod 245 will rotate pinion 208 in clockwise direction until the counter is reset to zero (Fig. 10). The length of stroke of piston 213 toward the right is precisely limitable by adjustment of set-screw 217, which is of great practical importance, because failure to reset the counter exactly to zero would result in interrupting the sequence of operations of the automatic cycle for the reason to be more fully explained hereinafter. When pressure fluid is admitted to port 215, with piston 213 in its extreme right position, said piston 213 will be urged towards the left, and rack 245 will rotate pinion 208 in counter-clockwise direction. However, as previously pointed out, a one-way clutch, provided in counter 195 in connection with reset shaft 205, will prevent any counter-clockwise rotation of pinion 208 and shaft 205, respectively, from influencing its setting.

Electric circuit

As shown in Fig. 11, wires 222 and 223 constitute a power line and return or ground line, respectively, for the several electric motors and controls. Power line 222 includes a manual main switch 224 and a normally closed, spring-returned manual switch 242. At a point between said switches 224 and 242, a wire 227 is connected with power wire 222 and, by means of its branch wires 228 and 229, supplies current to one terminal of electric pump motors 225 and 226, respectively. The other terminals of motors 225 and 226 are connected by means of branch wires 231 and 232, respectively, with wire 230, which forms a part of ground line 223.

A three-wire, spring-returned push-button-type switch 249, whose upper and middle sets of contacts are normally open, and whose lower set of contacts is normally closed, has one of its upper contacts connected with power line 222 by a wire 250. A wire 251, including a contactor coil 252, connects its other upper contact to one of its middle contacts, and a wire 247 connects the other middle contact to the lower left-hand terminal of two-wire, spring-returned limit switch 139, whose upper left-hand terminal is shown connected by a wire 248 with said wire 251. The two lower contacts of switch 249 are connected by wires 253 and 243 with wire 251 and with the lower right-hand terminal 244 of limit switch 139, respectively. Upper right-hand terminal 246 of said switch 139 is connected with one side of a solenoid-operated, four-way valve 259 by means of a wire 260. A wire 261, which leads from the other side of said valve 259 to ground wire 223, completes this electric circuit. A wire 257, with normally open contactors 256 interposed therein, connects power line 222 with wire 251 between switch 249 and contactor coil 252, the latter being adapted to close said contactors 256 when electric current is flow-

ing in wire 251, thus establishing a circuit which by-passes switch 249.

Actuating arm 221 of limit switch 139 is located in the path of movement of cams 137 and 138, which are mounted on sprocket wheel 134, as previously described. Upon contact with either one of said cams, switch 139 will be actuated, thereby opening the electric circuit between wires 247 and 248 and closing the circuit between wires 243 and 260, as shown in Fig. 11. In its normal position, said limit switch 139 is adapted to keep the electric circuit closed between wires 247 and 248, while the one between wires 243 and 260 is open.

A wire 254 is connected with wire 247 and leads to one terminal of conveyor motor 121 and its magnetic, spring-loaded brake 258. A wire 255 connects the other terminal of said motor 121 with ground wire 230, completing this circuit. One terminal of a normally open pressure-reactive switch 287 is connected by means of a wire 274, including a contactor coil 69, with wire 260, while a wire 288 leads from its other terminal to one side of a solenoid-operated, four-way valve 291, whose other side is connected by wire 318 with ground wire 230 to complete the circuit. A wire 147, including a set of normally open contactors 83, is connected at one end with wire 274 between coil 69 and switch 287 and at its other end with wire 288. As long as current flows in wire 274 and, hence, through coil 69, the latter will keep contactors 83 closed. Thus, an electric circuit will be established, which by-passes switch 287. Its purpose will appear more fully hereinafter.

A normally open pressure-reactive switch 267 is connected by wire 269 with power line 222 and by wire 270 with one terminal of the switch in counter 195, said switch being closed only when counter 195 is reset to zero. Wire 271 leads from the other terminal of said switch in counter 195 to lower left binding post 272 of a two-wire pressure-reactive switch 273, which is adapted to hold the circuit normally closed between its upper contacts 276 and 277 and to hold the circuit normally open between lower contacts 272 and 278. A wire 304 connects contact 278 with one terminal of twisting motor 25 and its magnetic spring-loaded brake 40. A wire 233 leads from the other terminal of said motor 25 to ground wire 230, thus completing this particular circuit. A manually operated switch 305 is interposed in line 304 and also connected by wires 317 and 316 with power line 227 and ground 230, respectively. Said switch, illustrated diagrammatically in greater detail in Fig. 12, normally holds the electric circuit closed in wire 304, coming from pressure switch 273 and leading to motor 25, and normally holds the circuit open between wires 317 and 316.

At a certain period of the cycle of operations, to be more fully explained hereinafter, and while no current is flowing in wire 304, it may be desirable to reverse twisting motor 25 by reversal of its field 306 by means of switch 305 (Fig. 12). Said switch 305 comprises six sets of contacts, whose upper three are normally closed and whose lower three sets are normally open. The top set of contacts normally holds the circuit closed in wire 304, coming from the pressure switch 273 and continuing to one terminal of twisting motor 25. A wire 229 connects the fourth set of contacts from the top with the power line 317 and continues to the same terminal of the motor, the circuit being normally open in this line. The second set of contacts from the top connects line 304 with one side of field 306, this contact being normally closed. The sixth set of contacts from the top connects the ground wire 230 with the same side of field 306 as the second set of contacts by means of wire 316, this contact being normally open. The third set of contacts from the top connects the ground wire 230 with the other side of field 306, this contact being normally closed, and the fifth set of contacts from the top connects the power line 317 with said other side of field 306, this contact being normally open. It will be seen that, when spring-returned switch 305 is actuated, after counter 195 has interrupted the electric circuit to 271 and 304, the three upper sets of contacts will all be opened, while the three lower ones will be closed. Consequently, the electric field and the direction of rotation of motor 25 will be reversed.

The second circuit through switch 273 is constituted by a wire 275, connecting terminal 276 of said switch 273 with wire 274 at a point in advance of coil 69, and a wire 279, connecting terminal 277 with one side of solenoid-operated, four-way valve 280, whose other side is connected with ground wire 230, completing the circuit.

A normally open limit switch 295 is connected with power wire 222 at a point beyond switch 242 by a wire 296 and with one side of solenoid-operated, four-way valve 298 by a wire 297; the electric circuit is completed by wire 319 leading from the other side of solenoid-operated, four-way valve 298 to ground wire 230.

Hydraulic circuit

Suction pipes 236 and 237 of pumps 234 and 235, respectively, communicate with the respective interiors of reservoirs or tanks 99 and 127, which may contain any suitable pressure fluid. Through outlet pressure ports 238 and 239, respectively, the pressure fluid is forced into respective main conduits 240 and 241 (Fig. 11). It will be understood that electric main switch 224 is usually closed and electric motors 225 and 226 and their respective pumps 234 and 235 are constantly in operation when the machine is in use, so that pressure is provided in said main conduits 240 and 241.

Inlet port 262 of spring-loaded, solenoid-operated, four-way valve 259 is connected to conduit 240, and, in its normal, de-energized position, said valve 259 will direct the pressure fluid from said inlet port 262 to upper port 307, connected by pipe 308 and suitable branch pipes to the front ports 98 of stationary clamping cylinders 96, whose rear ports 97, in turn, communicate through branch pipes 265 with a conduit 264, which terminates in lower port 263 of said valve 259. In said de-energized position of valve 259, the hydraulic fluid on the left side of pistons 95 will be under negligible pressure only and is free to flow from said lower port 263 to an outlet port communicating with discharge pipe 309, open to the interior of tank 99.

When solenoid-operated valve 259 is energized, its valve spool will be lifted against spring pressure, and fluid pressure will be directed from inlet port 262 to lower port 263 and through conduit 264 and branch pipes 265 to the rear ports 97 of stationary clamping cylinders 96. Pistons 95 will thus be urged towards the right and expel the fluid in cylinders 96 to the right of said pistons 95 through cylinder ports 98, conduit 308, valve port 307, and outlet port and discharge pipe 309 back to tank at negligible pressure.

Said valve 259 and all other solenoid-operated, four-way valves, such as designated by numerals 280, 291, and 298, used elsewhere in the circuit, are of standard and well-known design and similar to the type shown in Fig. 6 of my U. S. Patent No. 2,217,301.

Normally open pressure-reactive switch 267, including a drain pipe 268 communicating with the interior of tank 99, is connected by pipe 266 with conduit 264 and will close the electric circuit between wires 269 and 270 when a predetermined maximum hydraulic pressure has been reached in conduit 264 after the jaws 64'' in stationary clamping heads 86, 87, and 88 have gripped the bars to be twisted with the desired force equivalent to said predetermined maximum hydraulic pressure. At a lower pressure, or when valve 259 is de-energized and the fluid pressure in conduits 264 and 266 is of a nominal magnitude only, pressure switch 267 will be in open position.

Another spring-loaded, solenoid-operated, four-way valve 280, similar to previously described valve 259 and having its inlet port 281 connected to main conduit 241, is arranged for controlling piston or plunger 166 in cylinder 163 of the lifting and centering mechanism 23. An upper port 285 and lower port 282 of said valve 280 are connected by pipes 284 and 283, respectively, to the respective rear port 165 and front port 164 of cylinder 163. An outlet or discharge port of valve 280 communicates by means of pipe 286 with the interior of tank 127. In its normal, de-energized position, said solenoid-operated valve 280 will direct the pressure fluid from inlet port 281 to upper port 285 and through pipe 284 to cylinder port 165. Hydraulic fluid to the left of piston 166 is free to return to tank at nominal pressure through cylinder port 164, pipe 283, lower port 282, and outlet port and pipe 286.

When energized, valve 280 will direct the pressure fluid which enters inlet port 281 to lower port 282 and through conduit 283 to front cylinder port 164. Hydraulic fluid to the right of piston 166 is free to return to tank 127 at negligible pressure through rear cylinder port 165, conduit 284, upper port 285, and discharge port and pipe 286.

Conduit 283 is also in communication, by means of a branch pipe 290, with a normally open pressure-responsive switch 287, which includes a drain pipe 289 open to tank 127, and which is similar in every respect to switch 267, previously described. Said switch 287 will close the electric circuit between wires 274 and 288 when a predetermined maximum pressure has been built up in conduit 283 after lifting and centering the bars to be twisted. At a lower hydraulic pressure, or when solenoid-operated, four-way valve 280 is de-energized and conduit 283 is open to tank at nominal pressure, as previously set forth, switch 287 will return to its normally open position.

Still another spring-loaded, solenoid-operated, four-way valve 291, similar in every respect to the ones previously described, is adapted to control the movement of indexing piston 37 with its piston rod 38 to shift sub-base 26 and, hence, twisting heads 53, 51, and 52 into working position. Four-way valve 291 has its inlet port 292 connected to main conduit 241, its discharge port open to tank 127 by means of pipe 315, and its lower and upper ports 293 and 314 in communication, respectively, with rear port 32 and front port 33 of indexing cylinder 34 by means of respective pipes 294 and 36. In the normal, de-energized position of said solenoid-operated valve 291, pressure fluid from conduit 241 is in communication with front port 33 of indexing cylinder 34 through inlet port 292, upper port 314, and conduit 36; fluid under nominal pressure is free to return to tank 127 through rear port 32, conduit 294, lower port 293, and discharge port and pipe 315. When the solenoid of said valve 291 is energized and lifts the valve spool against spring pressure, pressure fluid from conduit 241 is in communication with rear port 32 of indexing cylinder 34 through inlet port 292, lower port 293, and conduit 294. Fluid to the left of piston 37 is free to return to tank 127 at nominal pressure through front port 33, conduit 36, upper port 314 and discharge port and pipe 315.

A further spring-loaded, solenoid-operated, four-way valve 298, similar in action and design to valves 259, 280, and 291, already described, and having its inlet port 299 also connected with main conduit 241, is arranged to control the operation of clamping pistons 70, reset piston 213, and a pressure-reactive switch 273 including drain pipe 150. In its normal, de-energized position, valve 298 is adapted to direct the pressure from inlet port 299 to an upper port 310, which is in communication with front ports 77 of rotatable clamping cylinders 71 by means of a pipe 311. Simultaneously, pressure will also be directed by a pipe 313, branching off conduit 311, to the rear port 215 of reset cylinder 212, moving piston 213 forward. The resulting anti-clockwise rotation of pinion 208 will leave the setting of counter 195 undisturbed, because a one-way clutch 220, shown diagrammatically in Fig. 11, will prevent transmission of said anti-clockwise rotation to the counting mechanism, as previously explained.

The fluid to the right of pistons 70 is free to return to tank 127 at negligible pressure through rear cylinder ports 78, a pipe 301 connecting said ports 78 with a lower port 300 of valve 298, and discharge port and pipe 312. Fluid in front of piston 213 will be returned to tank 127 through front port 214 and a pipe 302, which forms a branch of conduit 301.

When solenoid-operated valve 298 is energized, its valve spool will direct the pressure from inlet port 299 to lower port 300 and by means of pipe 301 to rear ports 78 of rotatable clamping cylinders 71 to close the jaws in twisting heads 51, 52, and 53. Simultaneously therewith, fluid under pressure will flow through branch pipe 302 to front port 214 of cylinder 212, thus resetting counter 195 to zero by the action of rack 245 and causing the electric circuit in counter 195 to be closed between wires 270 and 271. Two-wire, pressure-reactive switch 273 is also connected by pipe 303 to main conduit 301; hence, when a predetermined maximum pressure has been built up in conduit 301, after the jaws 64 and 64' in twisting heads 51, 52, and 53 have been set on the bars to be twisted, the normally closed electric circuit between wires 275 and 279 will be opened, and the normally open electric circuit between wires 271 and 304 will be closed.

Operating cycle

After completion of one complete operating cycle, the parts occupy the positions illustrated diagrammatically in Fig. 11. The three bars twisted in the preceding cycle have been released by the stationary clamping heads 86, 87, and 88, as well as by the twisting heads 53, 51, and 52 and have dropped again into their respective pockets in carrier links 132 aligned with said

heads of the twisting station. Jaws 64 and 64' in rotatable heads 51, 52, and 53, and jaws 64'' in stationary heads 86, 87, and 88 are open, as shown in solid lines in Figs. 6 and 8, respectively. The headstock 21, mounted on sub-base 26, has been shifted into its extreme right-hand position. The solenoid-operated, four-way valves 259, 280, 291, and 298 are de-energized, and pressure-reactive switches 267, 287, and 273 are in their normal positions. The lifting and centering device 23 is in inoperative position, as depicted in Fig. 3; counter 195 still shows the number of twists recorded during the preceding operating cycle, and its switch, therefore, holds the electric circuit open, but, contrary to Fig. 11, main switch 224 will be closed, thus keeping electric motors 225 and 226 with their respective hydraulic pumps 234 and 235 in constant operation. The conveyors 24 are at rest, having been stopped by cam 138 on sprocket wheel 134, actuating limit switch 139, and thereby interrupting the electric circuit to electric motor 121 at a predetermined point in the preceding operating cycle. Contactors 256 and 83 are open.

To begin a new operative cycle of the machine, three bars are loaded into the aligned loading pockets, *a*, *b*, and *c* (Fig. 3) of the several transverse and spaced-apart conveying or feeding means 24 (Figs. 1 and 2) with intermediate portions of said bars spanning the space between adjacent conveyors 24, and opposite end portions of said three bars projecting beyond the centering means 23 and conveyor 24 adjacent to tailstock 22, respectively. The left-hand end portions project somewhat into horizontal recesses 90 of stationary clamps 86, 87, and 88. When the bars have thus been placed, the manual, spring-returned switch 249 is momentarily actuated, thus opening the electric circuit between wires 253 and 243, and closing the electric circuit to start conveyor motor 121 by directing the current from power line 222 through wires 250, 251, 247, and 254. Coil 252 simultaneously closes contactors 256, thereby establishing another electric circuit, independent of and by-passing switch 249, between said power line 222 and wire 251 as long as current is flowing in said wire 251 and coil 252. Simultaneously with actuating switch 249, motor 121, and, consequently, conveyors 24 will start to operate. Cam 138 on sprocket wheel 134 will free arm 221 of spring-returned limit switch 139, thereby opening the circuit between wires 243 and 260 and closing the circuit between wires 247 and 248. After releasing the only momentarily actuated switch 249, conveyor motor 121 wil continue to operate, because it receives electric current from power line 222 over by-pass circuit 257, wires 251, 248, 247, and 254, and, although the circuit is now closed between wires 253 and 243, no current will flow in wire 260, since the circuit is now interrupted between terminals 244 and 246 of limit switch 139.

The upper runs of the endless chains forming parts of conveyors 24 move toward the left in Fig. 3, carrying the bars twisted in the previous cycle from the twisting station to the left or unloading side of the machine and conveying the untwisted bars in loading pockets *a*, *b*, and *c* from the receiving position, shown in Fig. 3, to predetermined positions at the twisting station, so as to be in axial alignment with the stationary clamps 86, 87, and 88 and in longitudinal alignment with twisting heads 53, 51, and 52, respectively. In this position of the conveyors 24, cam 137 on sprocket wheel 134 will actuate lever 221 of limit switch 139, thereby opening the electric circuit between wires 248 and 247 and stopping conveyor motor 121. At the same time, the circuit will be closed between wires 243 and 260, and solenoid-operated, four-way valve 259 will be energized, thus moving pistons 95 to the right and closing gripper jaws 64'' in stationary clamps 86, 87, and 88 with a predetermined force over the left-end portions of the bars to be twisted. Pressure switch 267 will respond thereto and close the electric circuit between wires 269 and 270. As this takes place, solenoid-operated, four-way valve 280 will also be energized, since electric current will also flow in wires 274, 275, and 279. As previously explained, this will result in moving piston 166 of lifting and centering device 23 towards the right, thereby lifting, centering, and holding the other ends of said bars to be twisted in axial alignment with twisting heads 53, 51, and 52, respectively, as shown to the right of the vertical center line in Fig. 5. At a predetermined pressure in conduit 283, pressure switch 287 will close the electric circuit between wires 274 and 288, thereby energizing solenoid-operated, four-way valve 291. Electric current flowing in wire 274 will cause coil 69 to close contactors 83, thus establishing by means of wire 147 an electric circuit which by-passes switch 287. Energizing solenoid-operated valve 291 will result in moving piston 37, and, hence, sub-base 26 to the left, to locate the open jaws 64 and 64' of twisting heads 53, 51, and 52 over the right-end portions of said bars or workpieces to be twisted, as shown in Figs. 2 and 4. Towards the end of its travel, sub-base 26 will contact and actuate limit switch 295 and close the electric circuit between wires 296 and 297 for energizing solenoid-operated, four-way valve 298. This will cause clamping pistons 70 to move to the left, thereby closing jaws 64 and 64' of twisting heads 53, 51, and 52 (as shown in dotted lines in Fig. 6) over the respective right-end portions of the work-pieces to be twisted. The bars to be twisted are now clamped at both their ends and with their right hand ends in the twisting heads at a higher level than the adjacent conveyor pockets. The bars will, therefore, be suspended in the air during the twisting operation to follow, because the bars are usually under tension stresses during the twisting operation, since they are prevented from following their natural tendency to shorten. Simultaneously with the clamping of the right-end portions of the work-pieces, reset piston 213 will move to the rear and will reset counter 195 to zero, causing the electric circuit between wires 270 and 271 to be closed. At a preset hydraulic pressure, switch 273 will respond and open the electric circuit between wires 275 and 279 and close the electric circuit between wires 271 and 304. Therefore, solenoid-operated valve 280 will be de-energized, piston 166 will be caused to return to its original position, shown in Fig. 11, and, hence, return lifting and centering device 23 into initial, inoperative position (Fig. 3), thereby freeing the bars or stock for the twisting operation to follow. The hydraulic pressure in conduits 283 and 290 being now negligible only, pressure switch 287 will open the electric circuit between wires 274 and 288, but the electric circuit to valve 291 will not be interrupted, because the current will still flow through the by-pass wire 147, whose contactors 83 are closed at this point of the cycle. The aforementioned closing of the electric circuit between wires 271 and 304 will result coincidentally in starting twisting motor 25 to ro-

tate twisting heads 53, 51, and 52 for helically twisting the stock.

Pressure switch 267, counter 195, and pressure switch 273 are in series. Hence, twisting motor 25 can start only when the respective electric circuits in all these devices are closed, indicating that the preceding operations have taken place in the manner intended; otherwise, the automatic sequence of operations will be interrupted at this point, and possible damage to the equipment or an unsatisfactory product will be prevented. Should the automatic cycle be interrupted, or should it become desirable to interrupt the same, all parts of the machine may be actuated to return to their respective initial positions by actuating manual switch 242, without first finishing the remainder of the cycle.

Normally, the twisting operation is continued until the bars have been subjected to a predetermined number of twists, for which the counter 195 is set. At this point, counter 195 will act to open the circuit in which it is located and thereby cause the twisting motor 25 to be stopped, which represents the final step of the automatic cycle made possible with the control arrangement shown in Fig. 11.

When the twisting operation has been completed, the twisted bars, because of inherent forces, tend to untwist or uncoil. To take this so-called spring-back out of the bars, twisting motor 25 and, hence, twisting heads 51, 52, and 53 may be reversed at this point by means of manually-operated switch 305. After recoiling the twisted bars a few turns, to eliminate the spring-back and neutralize the inherent forces developed in the bars during the twisting operation, switch 305 is released and reset-switch 242 actuated, which results in opening the electric circuit beyond said switch 242. As a consequence, solenoid-operated, four-way valves 259, 298, and 291 will be de-energized and their valve spools returned by spring pressure into their initial positions, thereby opening the jaws of stationary clamps 86, 87, and 88 and those of twisting heads 53, 51, and 52, as well as shifting sub-base 26 into initial position. Pressure switches 267 and 273 will return into their normal positions, and contactors 256 and 83 will also open as soon as the flow of the electric current is interrupted by actuating switch 242. The twisted bars are, consequently, released and will drop into their respective pockets of conveyors 24, preparatory to the next cycle of operation of the machine.

The machine combines relative mechanical simplicity with maximum efficiency, because the several operations of the automatic cycle, despite their complexity, follow one another in natural sequence, requiring for their timing and control only simple and, therefore, reliable, inexpensive control devices. The hydraulic actuation of the gripping jaws permits the application of heavy pressure to cause the jaws to bite into the bars, eliminating slippage between bars and jaws during the twisting operation and thereby insuring a uniform product. The wedge-shaped, self-energizing jaw-holders tend to tighten the jaws on the bars as the axial pull of the latter increases as a result of the stretching thereof, which generally accompanies their helical twisting.

It should be noted that for the shifting of headstock 21 into clamping position, for actuating its twisting heads 51, 52, and 53 to clamp the work-pieces at one end, for actuating the clamping heads 86, 87, and 88 of tailstock 22 to clamp the opposite ends of said work-pieces, and for actuating the centering device, all of which units comprise a twisting station, hydraulic means are employed. While an electric motor has been proposed for rotating twisting heads 51, 52, and 53, it will be understood that hydraulic means may be employed instead, if desired.

While in the embodiment of my invention, as disclosed, the automatic cycle of operations comes to an end after the twisting motor 25 has been stopped, uncoiling of the twisted bars and resetting of the several devices into their original position may also be incorporated into the automatic cycle, if desired, by employing means analogous to those disclosed in my aforementioned U. S. Patent No. 2,217,301, without departing from the spirit of the present invention. I have shown and described, by way of example, mechanisms as well as hydraulic and electrical controls for obtaining the stated objects, but it will be obvious to those skilled in the art that my invention is not limited thereto but is susceptible to various changes and modifications in the specific forms shown and described.

The electric wiring diagram has been shown intentionally in the simplest possible form, to facilitate tracing of the various circuits which are opened and closed during the working cycle. The multiple automatic twisting machine has been depicted, by way of example, as adapted to twist three bars simultaneously; but it may be modified to twist one bar alone or any desired number of bars simultaneously. The twisted bars are designed primarily for use as concrete reinforcements, although they are not limited to such use, nor is the machine restricted to the production of such reinforcement bars and may be employed for twisting stock of any suitable composition, including plastic material.

The pressure-responsive switches 267 and 273 are in series with counter 195 as a check on the preceding operations. It is obvious that pressure switch 267 could be altogether eliminated, if so desired, and wire 270 directly taken from the power line 222 without changing the natural sequence of operations as described.

While centering means are shown only for locating the ends of the bars adjacent to the twisting heads 51, 52, and 53, similar means may be employed for locating the opposite ends of the bars adjacent to the clamping heads 86, 87, and 88.

It is obviously not essential that the rotatable twisting heads 51, 52, and 53 are located at a higher level than clamping heads 86, 87, and 88. Their respective levels might be reversed; or both might be located at an identical but higher level than the bottoms of loading pockets *a*, *b*, and *c*, in which case lifting and centering means may preferably be used at both ends of the rods or work-pieces.

I desire, therefore, that only such limitations shall be placed on the scope of the present invention as are specifically set forth in the appended claims.

What I claim is:

1. In a machine for automatically twisting stock in a successive series of operations of the machine, means for receiving and conveying the stock to a predetermined position at a twisting station, clamping means for engaging one end of the stock at said station, other means at said station adapted to grip the respective opposite end of said stock, hydraulic actuators for said clamping and said gripping means, control means for said hydraulic actuators, means to rotate said gripper means to twist said stock at said station, means to then reverse actuation of said gripper means to partially uncoil said twisted

stock, and to free the stock from said clamping and gripper means preparatory to the next cycle of operations of said machine.

2. In a machine for automatically twisting a plurality of work-pieces simultaneously in a successive series of operations of the machine, means for receiving and conveying a plurality of work-pieces to predetermined positions at a twisting station, clamping means for engaging one end of the work-pieces at said station, other means at said station adapted to grip the opposite ends of said work-pieces, hydraulic actuating means and electrically actuated control means for said clamping and said gripping means, means to rotate said gripper means to twist all of said work-pieces simultaneously at said station, and means for automatically arresting the twisting operation when the work-pieces have been subjected to a predetermined number of twists.

3. In a machine for automatically twisting a plurality of bars simultaneously in a successive series of operations of the machine, means for receiving and conveying a plurality of bars to predetermined positions at a twisting station, clamping means for engaging one end of the bars at said station, other means at said station adapted to grip the opposite ends of said bars aligned in said station, hydraulic actuators for said clamping means and for said gripping means, hydraulic controls for said hydraulic actuators, said hydraulic controls being electrically operated, means to then rotate said bar gripper means to twist all of said bars simultaneously at said station, means for automatically arresting the twisting operation when the bars have been subjected to a predetermined number of twists, and means to then reverse actuation of said gripper means to partially uncoil said twisted bars and to free the bars from said clamping and gripper means preparatory to the next cycle of operations of said machine.

4. In a machine for automatically twisting a plurality of work-pieces simultaneously in a successive series of operations of the machine, electrically controlled and actuated means for receiving and conveying a plurality of work-pieces to predetermined positions at a twisting station, clamping means for engaging one end of the work-pieces at said station, other means at said station adapted to grip the opposite ends of said work-pieces aligned in said station, hydraulic actuators for said clamping means and said gripping means, electrically operated hydraulic control means for said hydraulic actuators, means to then rotate said gripper means to twist all of said work-pieces simultaneously at said station, counting means for automatically arresting the twisting operation when the bars have been subjected to a predetermined number of twists, and adjustable plunger means to reset said counting means to zero just prior to the twisting operation.

5. In a machine for automatically twisting a plurality of work-pieces simultaneously in a successive series of operations of the machine, electrically controlled and actuated means for receiving and conveying a plurality of work-pieces to predetermined positions at a twisting station, clamping means for engaging one end of the work-pieces at that station, other means at said station adapted to grip the opposite ends of said work-pieces aligned in said station, further means adapted to locate the ends of said work-pieces adjacent to said gripper means and to hold said ends in alignment therewith until said gripper means have gripped said ends, said clamping means, gripping means, and locating means being hydraulically actuated and electrically controlled, means to then rotate said gripper means to twist all of said work-pieces simultaneously at said station, counting means for automatically arresting the twisting operation when the bars have been subject to a predetermined number of twists, adjustable hydraulic means to reset said counting means to zero prior to the twisting operation, means to reverse rotation of said gripper means to partially uncoil said twisted work-pieces, and means to release the work-pieces from said clamping and gripper means preparatory to the next cycle of operations of said machine.

6. In a machine for automatically twisting a plurality of bars simultaneously in a successive series of operations of the machine, a main frame, electrically controlled and actuated means for receiving and conveying a plurality of bars to predetermined positions at a twisting station, clamping means for engaging one end of the bars at that station, said clamping means being hydraulically actuated and electrically controlled, means to anchor said clamping means selectively at different spaced-apart points along said frame to accommodate varying lengths of bars, other means at said station adapted to be shifted into gripping position preparatory to gripping the opposite ends of said bars, said shiftable gripping means being in longitudinal alignment with the first clamping means, electrically controlled hydraulic actuating means for shifting said gripping means into working position in response to said first-mentioned clamping means, centering means for locating said opposite ends of the bars into axial alignment with said gripping means, electrically controlled hydraulic means for actuating said gripping means to then grip said opposite ends of the bars, means to return said centering means to initial position in response to the gripping operation, means to then rotate said gripper means relative to said first clamping means to helically twist all of said bars simultaneously at said station, a counting device for automatically arresting the twisting operation when the bars have been subjected to a predetermined number of twists, plunger means to reset said counting device to zero, means to reverse rotation of said gripping means to partially uncoil said twisted bars, and means to release the bars from said clamping and gripping means preparatory to the next cycle of operations of said machine.

7. In a machine for automatically twisting a plurality of bars simultaneously in a successive series of operations of the machine, a main frame, electrically controlled and actuated means for receiving and conveying a plurality of bars to predetermined positions at a twisting station, clamping means mounted on said frame for engaging one end of the bars at said station, electrically controlled and hydraulically actuated means for actuating said clamping means in response to the conveying operation, twisting means mounted on said frame in longitudinal alignment with the level of the first clamping means adapted to be shifted into gripping position preparatory to gripping the opposite ends of said bars, electrically controlled and hydraulically actuated centering means also responsive to said conveying operation for locating said opposite ends of the bars into gripping alignment with said twisting means, other electrically controlled and hydraulically actuated means responsive to the centering operation to shift said twisting means into gripping

position, further electrically controlled and hydraulically operated means for then actuating said twisting means to grip said opposite ends of the bars, electrically controlled and hydraulically actuated means for returning said centering means into initial position in response to the gripping operation of said twisting means, means to then rotate said twisting means relative to said first clamping means to helically twist all of said bars simultaneously at that station, a counting device operatively connected to said twisting means for automatically arresting the twisting operation when the bars have been subjected to a predetermined number of twists, adjustable means to reset said counting device to zero, means to reverse rotation of said twisting means to partially uncoil said twisted bars, and means to release the bars from said clamping and twisting means preparatory to the next cycle of operations of said machine.

8. In an automatic machine of the character described, a clamping unit for engaging one end of a work-piece, a gripping and twisting unit for engaging the opposite end of said work-piece and for helically twisting said work-piece, a centering unit for aligning said opposite end of the work-piece with said gripping and twisting unit, in combination with means to automatically cause the actuation of all of said units or parts thereof in a predetermined successive series of operations.

9. In an automatic machine of the character described, in combination, rotatable means, power means operatively connected with said rotatable means for their actuation, a counting device adapted to automatically arrest said rotation after a predetermined number of revolutions, plunger-actuated means for automatically resetting said counting device to zero preparatory to the next cycle of rotation, and adjusting means to accurately limit the resetting stroke of said plunger.

10. In an automatic machine of the character described, means for receiving and conveying a plurality of work-pieces to predetermined positions at a twisting station, a clamping unit for engaging one end of said work-pieces, a gripping and twisting unit for engaging the opposite ends of said work-pieces and for helically twisting said work-pieces, a centering unit for aligning said opposite ends of the work-pieces with said gripping and twisting unit, and electrically controlled hydraulic means to automatically cause the actuation of all of said units or parts thereof in a predetermined successive series of operations.

11. In an automatic machine of the character described, means for receiving and conveying a plurality of bars to predetermined working positions at a twisting station, a clamping unit for engaging one end of said bars, a gripping and twisting unit for engaging the opposite ends of said bars and for helically twisting said bars, said conveying means being adapted to position one end of the bars in the horizontal working plane of said clamping unit and to position the opposite ends of the bars in a lower horizontal plane than said gripping and twisting unit, a lifting and centering unit for aligning said opposite ends of the bars with said gripping and twisting unit, and hydraulic means to automatically cause the actuation of all of said units or parts thereof in a predetermined successive series of operations.

12. In an automatic machine of the character described, electrically controlled and actuated means for receiving and conveying a plurality of bars to predetermined working positions at a twisting station, a clamping unit for engaging one end of the bars, a gripping and twisting unit for engaging the opposite ends of said bars and for helically twisting said bars, the working plane of said gripping and twisting unit being above that of that clamping unit, a lifting and centering unit for lifting said opposite ends of said bars to the working plane of said gripping and twisting unit and to locate said bars in axial alignment thereto, and electrically controlled hydraulic means for actuating all of said units or parts thereof in a predetermined successive series of operations.

13. In an automatic machine of the character described, means for receiving and conveying a plurality of work-pieces to predetermined working positions at a twisting station, a clamping unit for engaging one end of said work-pieces, a centering unit for aligning said ends of the work-pieces in clamping relation to said clamping unit, a gripping and twisting unit for engaging the opposite ends of the work-pieces and for helically twisting the latter, another centering unit for aligning said opposite ends of the work-pieces with said gripping and twisting unit, and fluid-pressure means for automatically actuating all of said units or parts thereof in a predetermined successive series of operations.

14. In a machine of the character described, means for receiving and conveying a plurality of bars to predetermined working positions at a twisting station, a clamping unit for engaging one end of said bars, a gripping and twisting unit for engaging the opposite ends of said bars and for helically twisting said bars, a centering unit for aligning said opposite ends of the bars with said gripping and twisting unit, in combination with means for automatically actuating all of said units or parts thereof in a predetermined successive series of operations.

15. In a machine for automatically twisting a plurality of bars simultaneously in a successive series of operations of the machine, a main frame, electrically controlled and actuated means for receiving and conveying a plurality of bars to predetermined positions at a twisting station, stationary clamping means mounted on said frame for clamping one end of the bars at said station, electrically controlled and hydraulically actuated means for actuating said stationary clamping means in response to the conveying operation to clamp one end of the bars, twisting means mounted on said frame in longitudinal alignment with said clamping means and adapted to be shifted into gripping position preparatory to gripping the opposite ends of said bars, the working plane of said twisting means being above that of said clamping means, electrically controlled and hydraulically actuated centering means for lifting said opposite ends of the bars into gripping alignment with said twisting means also responsive to said conveying operation, other electrically controlled and hydraulically actuated means responsive to said centering operation to shift said twisting means into gripping position, further electrically controlled and hydraulically operated means responsive to the shifting operation for actuating said twisting means to grip said opposite ends of the bars, additional electrically controlled and hydraulically actuated means responsive to the gripping operation for returning said centering means into inoperative position, means to then rotate said twisting means relative to said first clamping means to helically twist all of said bars simultaneously at that station, a counting device operatively connected to said twisting means for automatically arresting the

twisting operation when the bars have been subjected to a predetermined number of twists, hydraulically controlled and actuated means to reset said counting device to zero coincidentally with said gripping operation, manually controlled means to reverse rotation of said twisting means to partially uncoil said twisted bars, and other manually controlled means to release the bars from said clamping and twisting means and to return all parts of said twisting station to their respective initial positions preparatory to the next cycle of operations of said machine.

16. In a machine for automatically twisting a plurality of bars simultaneously in a successive series of operations, a main frame, electrically controlled and actuated means for receiving and conveying a plurality of bars to predetermined positions at a twisting station, stationary clamping means mounted on said frame for clamping one end of the bars at that station, electrically and hydraulically controlled but hydraulically actuated means for actuating said stationary clamping means in response to the conveying operation to clamp one end of the bars, rotatable clamping means mounted on said frame in a different plane than said first stationary clamping means but in longitudinal alignment therewith, said rotatable clamping means being adapted to be shifted into gripping position preparatory to gripping the opposite ends of said bars, centering means for locating said opposite ends of the bars in gripping alignment with said rotatable clamping means, electrically and hydraulically controlled but hydraulically actuated means for operating said centering means in response to the conveying operation to align said opposite ends of the bars, further electrically and hydraulically controlled but hydraulically actuated means responsive to the centering operation to shift said rotatable clamping means into gripping position, additional electrically and hydraulically controlled but hydraulically actuated means responsive to the shifting operation for actuating said rotatable clamping means to grip said opposite ends of the bars, auxiliary electrically and hydraulically controlled but hydraulically actuated means for returning said centering means into inoperative position in response to the gripping operation, means also responsive to said gripping operation to then rotate said rotatable clamping means relative to said stationary clamping means to helically twist all of said bars simultaneously at that station, a counting device operatively connected to said rotatable clamping means for automatically arresting the twisting operation when the bars have been subjected to a predetermined number of twists, means also responsive to said gripping operation to reset said counting device to zero prior to the twisting operation, manually controlled means to reverse rotation of said rotatable clamping means to partially uncoil said twisted bars, and other manually controlled means to release the bars from said stationary and said rotatable clamping means and to return all parts of said twisting station into their respective initial positions preparatory to the next cycle of operations of said machine.

ODD WENNBERG.

REFERENCES CITED

The following references are of record in the file of this patent:

UNITED STATES PATENTS

Number	Name	Date
1,367,099	Schmidt	Feb. 1, 1921
2,164,343	Nighthart	July 4, 1939

FOREIGN PATENTS

Number	Country	Date
403,213	Great Britain	Dec. 21, 1933
552,677	Great Britain	Apr. 20, 1943