June 1, 1965 A. H. MEIJERS 3,186,620

SHIPPING CONTAINER

Filed Oct. 15, 1962

Fig. 1.

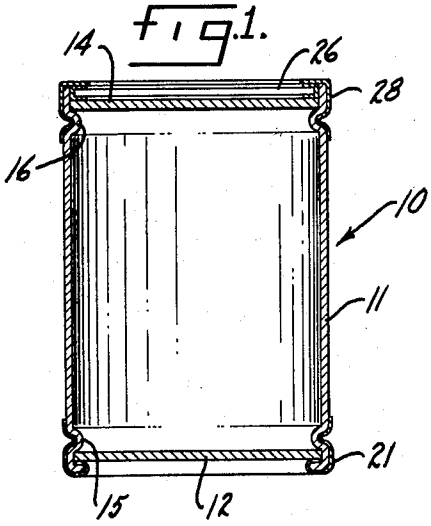

Fig. 2.

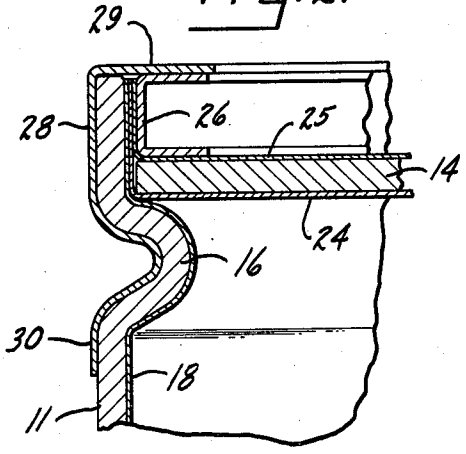

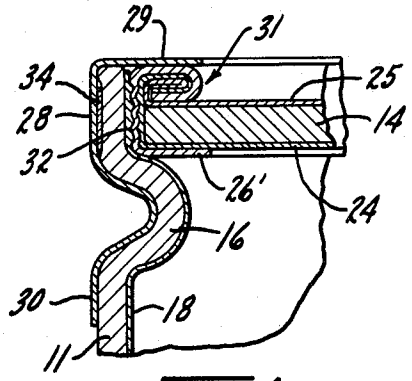

Fig. 3.

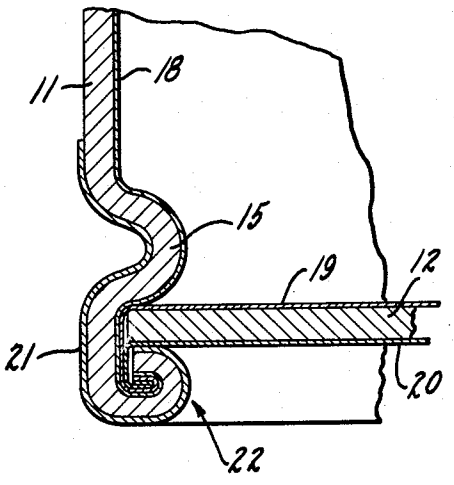

Fig. 4.

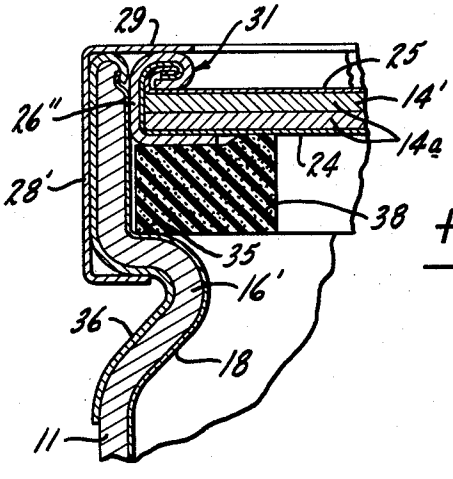

Fig. 5.

INVENTOR.

Antonie Herman Meijers,

BY

Wolfe, Hubbard, Voit & Osann

Attorneys.

United States Patent Office 3,186,620 Patented June 1, 1965

3,186,620

SHIPPING CONTAINER

Antonie H. Meijers, Nederhorst den Berg, Netherlands, assignor, by mesne assignments, to Inland Steel Company, Chicago, Ill., a corporation of Delaware

Filed Oct. 15, 1962, Ser. No. 230,617
Claims priority, application Germany, Oct. 18, 1961, V 21,479
4 Claims. (Cl. 229—5.7)

The present invention relates to shipping containers and more particularly, to an improved liquid-tight shipping container, and closure construction therefor, of the type wherein both the container body and the closure members are made of paperboard, fiber, or similar nonmetallic materials.

During recent years there has been an increasing demand for inexpensive nonmetallic containers which are suitable for use in storing and transporting diverse liquid or solid materials, yet which are capable of withstanding impacts occurring during handling of the containers. However, difficulties have been encountered in providing a liquid-tight closure construction for shipping containers of the type having both the container body and a closure or lid made, for example, of paperboard, fiber, or the like. This problem has been particularly vexing where the container lid is removable. In an effort to provide a paperboard shipping container having liquid-tight integrity—that is, a container characterized by its ability either to retain all of its liquid contents without leakage thereof, or to prevent ingress of contaminating liquids into the interior of a closed container—it has, heretofore, generally been necessary to resort to the use of a lid made of sheet metal which is secured to the nonmetallic container body by means of a locking ring. The use of such sheet metal lids has not, however, proven to be a satisfactory solution to the problem.

It is a general aim of the present invention to provide an improved shipping container and closure construction therefor characterized by the fact that both the container body and the lid are made of paperboard or similar material, yet wherein an effective liquid tight closure is obtained at the junction of the lid and the container body.

More specifically, it is an object of the invention to provide a closure construction for shipping containers made of paperboard or the like, which construction not only permits the use of a removable paperboard lid, or lid made of similar material, but moreover, enhances the liquid-tight integrity of the container.

In another of its aspects, it is an object of the invention to provide a shipping container and closure construction therefor wherein both the container body and the lid are made of paperboard, fiber, or similar material, yet wherein the closure construction is characterized by its ability to withstand impacts or other destructive forces applied thereto during usage.

Other objects and advantages of the invention will become apparent as the following description proceeds, taken in conjunction with the accompanying drawings, in which:

FIGURE 1 is a vertical axial cross-sectional view of a shipping container embodying the features of the present invention;

FIG. 2 is an enlarged fragmentary cross-sectional view of the upper edge portion of the container shown in FIG. 1 illustrating particularly the details of an exemplary closure construction for use with containers employing a removable lid made of paperboard or the like;

FIG. 3 is an enlarged fragmentary cross-sectional view similar to FIG. 2 illustrating the lower edge or seam porton of the container shown in FIG. 1; and,

FIGS. 4 and 5 are enlarged fragmentary cross-sectional views similar to FIG. 2 of slightly modified forms of closure constructions, also embodying the features of the present invention.

While the invention is susceptible of various modificatons and alternative forms, specific embodiments thereof have been shown by way of example in the drawings and will herein be described in detail. It should be understood, however, that it is not intended to limit the invention to the particular forms disclosed but, on the contrary, the intention is to cover all modifications, equivalents and alternatives falling within the spirit and scope of the invention as expressed in the appended claims.

Referring now to the drawings, there is illustrated in FIG. 1 a shipping container **10** having a generally cylindrical container sidewall or body **11**. In the exemplary form of the invention, the opposite ends of the container **10** are closed by a pair of disc shaped closure members **12, 14** which are dimensioned to be received within the ends of the container. The closure members **12, 14** are respectively seated or bottomed on a pair of radially inwardly extending circumferential ribs **15, 16** formed in the container body **11**. The ribs **15, 16** are spaced axially inward of the respective ends of the container, thus recessing the closure members **12, 14** relative to the container ends.

As the ensuing description proceeds, it will become apparent that the container body **11** and the closure members **12, 14** can be made of a wide variety of nonmetallic fibrous materials such for example, as paperboard, fiber, or other natural or synthetic materials. However, the invention will herein be descrbed in connection with a container employing components made of paperboard, it being understood that other similar materials may also be used if desired.

As best illustrated in FIG. 3, the container **10** is provided with a liner or liquid-tight coating **18** which is contiguous and coextensive with the inner surface of the container body **11**, and which renders the container body impervious to the passage of liqiuds therethrough. The exemplary closure member **12**, or container bottom, is provided with inner and outer layers **19, 20** respectively which protrude or extend beyond the periphery of the paperboard bottom **12**. The arrangement is such that when the bottom **12** is inserted into the end of the container **10** and seated on the circumferential rib **15**, the protruding edges of the layers **19, 20** are bent downwardly parallel to the container body **11** with the layer **19** being contiguous with the liquid-tight coating **18**.

In order to secure the bottom **12** to the container body **11** while simultaneously reinforcing the latter, there is provided a metal reinforcing ring **21** which surrounds the lower end of the container body. Thus, it is simply necessary to curl or roll the downwardly projecting edges of the ring **21**, body **11**, coating **18** and layers **19, 20** together in a manner known to those skilled in the art so as to form a substantially rigid folded seam **22** which securely locks the bottom closure **12** in place and presses the layer **19** into sealing contact with the liquid-tight layer **18** adjacent the rib **15**.

To insure that an effective liquid-tight closure is obtained and to prevent the passage of liquid through the paperboard bottom closure **12**, the inner layer **19** may itself constitute a liquid-tight liner or coating similar to the coating **18** on the inner surface of the container body **11**. Merely by way of example, the layer **19** could take the form of a thin sheet of plastic or the like. Alternatively, the layer **19** might simply be a thin sheet of paper upon which is sprayed, painted or otherwise deposited, a suitable liquid-tight coating. In either instance, the formation of the bottom seam **22** will tend to urge the liquid-

tight layer 19 into intimate sealing contact with the coating 18 both within the seam and in the vicinity of the circumferential rib 15.

Upon inspection of FIG. 2, it will be noted that the upper closure member 14, or lid, is substantially identical to the bottom closure 12 hereinabove described. Thus, the lid 14 is provided with inner and outer layers 24, 25 respectively which protrude or extend beyond the periphery of the paperboard lid 14. When the lid 14 is inserted into the upper end of the container and snugly seated therein on the circumferential rib 16, the protruding edges of the layers 24, 25 are bent upwardly parallel to the container body 11 with the layer 24 being contiguous with the liquid-tight coating 18. Of course, it will be appreciated that the layer 24 will either constitute or include a liquid-tight coating in a manner similar to that described for layer 19.

In accordance with one of the important aspects of the present invention, there is provided a novel closure construction for securely locking the lid 14 in place while at the same time establishing an effective liquid-tight seal at the junction of the lid 14 and the container body 11. In the illustrative form of the invention shown in FIG. 2, this is accomplished by providing a pair of metallic rings 26, 28 which are utilized to intimately press the upper ends of the container body 11, coating 18, and layers 24, 25 together in a radial direction, while simultaneously urging the lid 14 and its liquid-tight layer 24 axially into intimate sealing contact with the coating 18 adjacent the rib 16.

In carrying out the present invention, the two metallic rings 26, 28 are generally U-shaped in cross-section with the ring 28 encompassing ring 26 and with the latter ring 26 defining a press ring positioned on the outer side of the lid 14 and within the upwardly projecting ends of the container body 11, coating 18, and upwardly bent portions of layers 24, 25. The ring 28 is preferably a continuous closing ring having a portion 29 adapted to be turned inwardly—however, it may take the form of a split ring having an inwardly projecting flange similar to the portion 29 and suitable clamping means (not shown) for contracting the ring. In either case, when the portion 29 of the ring 28 is turned inwardly or when the clamping means associated with a split ring is tightened, the upwardly projecting portions of the container body 11, coating 18 and lid layers 24, 25 are subjected to radial compressive forces between the webs of the rings 26, 28, thus providing a liquid-tight closure. Moreover, at the same time the lid 14, coating 24, coating 18, and container body 11 are also subjected to axial compressive forces in the vicinity of rib 16, thereby tending to enhance the liquid-tight seal obtained.

It will also be noted that the ring 28 is provided with a downwardly extending portion 30 which surrounds the upper end of the container 10. Thus, the ring 28 with its radial and axial extensions 29, 30 serves to reinforce the upper end of the container, thereby protecting the container end from damage due to rough handling or the like.

Referring to FIG. 4, there is illustrated a slightly modified form of closure assembly which is somewhat similar in construction to the arrangement described above and also embodying the present invention. In view of the similarity between the two exemplary closure assemblies of the invention, like parts in both assemblies will be designated by identical reference numerals and those parts not common to the two assemblies will be designated by different reference numerals.

As shown in FIG. 4, the closure assembly includes a metallic press-ring 26′ which is permanently secured to the lid 14. In this form of the invention a liquid-tight connection between the ring 26′ and the lid 14 is established by curling one leg of the ring 26′ and the protruding marginal edges of layers 24, 25 to form a seam 31 in much the same manner as previously described in connection with the bottom closure shown in FIG. 3. When the lid 14 and press-ring 26′ assembly is inserted into the upper end of the container, it is simply necessary to contract the closing ring 28 (either by turning the portion 29 inwardly as shown in FIG. 4, or by tightening suitable clamping means, not shown, in the event that the ring 28 is a split ring) to establish an effective liquid-tight closure. When the ring 28 is contracted, the container body 11 and coating 18 are radially compressed between the webs of the rings 28 and 26′. At the same time, the liquid-tight layer 24 is being compressed between the lid 16 and the ring 26′. And, of course, the ring 26′ (like the ring 26 shown in FIG. 2) serves as a press-ring to simultaneously establish axial compressive forces at the junction of the lid 14 and the container body 11.

In order to further enhance the liquid-tight integrity of paperboard containers embodying the present invention, one or more circumferential, radially projecting, annular ribs 32 (FIG. 4) are formed in the web of the press-ring 26′. Such ribs tend to be pressed into the container body when the ring 28 is contracted, thereby establishing a higher specific pressure at least over a narrow contact surface between the container body and the closure components. Of course, while such ribs have not been illustrated in the form of the invention shown in FIG. 2, it will be understood that the web of the ring 26 could be provided with annular ribs having an outwardly bent angular or arcuate cross-section, while the web of the ring 28 could be provided with similar opposing ribs bent inwardly.

For the purpose of insuring that liquid-tight closure assemblies embodying the present invention are substantially unaffected by shocks or blows occurring in the upper edge region of the container during transport, provision may be made for relieving the ring 28 from the high closing forces required to perfect a liquid-tight seal. To this end, and as shown in FIG. 4, an additional ring 34 is provided in surrounding relationship to the upper end of the container body 11 and underlying the ring 28. In this form of the invention, the ring 34 serves to provide the requisite closing forces, while the ring 28 serves to protect and reinforce the upper end of the container. And, of course, the ring 28 and its flange 29 also serve to hold the lid 14 snugly against the seat defined by rib 16.

Turning next to FIG. 5, there is shown a slightly modified closure assembly also embodying the present invention and which is particularly suitable for use with containers that are or may be subjected to rough handling. As here shown, the lid 14′ comprises a lamination of a plurality of plies 14*a* of paper or the like which are secured together by adhesive. The lid 14′ is also provided with inner and outer layers 24, 25, the protruding peripheral edges of which are curled together with a press-ring 26″ in a manner similar to that described in connection with FIG. 4. The lid 14′ is received within the upper end of the container body 11 and its liquid-tight coating 18, the container body here having a circumferential rib 16′ defining an annular radial seat or shoulder 35. A separate metallic reinforcing band 36 is mounted on the outer surface of the upper end of the container. In this form of the invention, a liquid-tight closure is obtained by compressing the marginal edges of the coatings 24, 25 between the press-ring 26″ and the lid 14′ while simultaneously compressing the container body 11 and its coating 18 between the press-ring 26″ and an encompassing closing ring 28′ having a U-shaped cross-section.

As so far described, the closure assembly shown in FIG. 5 is substantially like that shown in FIG. 4. The two closure assemblies differ primarily in that a resilient washer 38 (FIG. 5) made, for example, of rubber, is interposed between the seat or shoulder 35 and the lid 14′. The arrangement is such that when the U-shaped closing ring 28′ is applied, the seam 31 on the lid 14′ is pushed axially inward so as to force the press ring 26″ into intimate engagement with the resilient washer 38.

Thus, a resilient container closure assembly is established which will withstand impacts and rough handling better than heretofore possible.

While the present invention has been described in connection with lids made of paperboard or the like and having a liquid-tight coating applied thereto, it will be appreciated that other arrangements could be employed and still fall within the spirit and scope of the invention. Merely by way of example, rather than applying a liquid-tight coating to the inner surface of the lid, a thin foil of synthetic liquid-tight material covering the entire inner surface of the lid and having a marginal edge portion extending into the clamping area between the lid and the container body could be provided when closing the container. Such a construction would be particularly advantageous in an arrangement where the press-ring is permanently secured to the lid (as shown in FIG. 4) and where it is desired to prevent direct contact of the container contents with the metallic press-ring.

I claim as my invention:

1. A shipping container comprising, in combination, a container body made of fibrous material such as paperboard, a removable lid made of similar material, a layer of liquid-tight sheet material formed on a surface of said lid, said layer having a marginal edge portion protruding radially beyond the periphery of said lid and adapted to be bent outwardly into a position adjacent the inner surface of said body upon insertion of said lid into said body, a first ring surrounding the upper edge of said body, a second ring disposed inwardly of said first ring, said body and said marginal edge portion, one of said rings comprising a closing ring, and means for tightening said closing ring whereupon said body and said marginal edge portion are pressed together.

2. A shipping container comprising, in combination, a container body made of fibrous material such as paperboard, a removable lid made of similar material, a liquid-tight coating formed on the inner surface of said lid, said coating having a marginal edge portion protruding radially beyond the periphery of said lid and adapted to be bent outwardly between said body and said lid, an inwardly extending circumferential rib formed on said body and defining a seat for said lid, a first ring surrounding the upper edge of said body, a second ring disposed inwardly of said body, said first ring, and said marginal edge portion, one of said rings comprising a closing ring, and means for tightening said closing ring so that said

body and said marginal edge portion are pressed together between said rings and inwardly toward said lid while said lid and said coating are pressed into intimate engagement with said seat.

3. A shipping container comprising, in combination, a container body made of fibrous material such as paperboard, a removable lid made of similar material, a liquid-tight coating applied to the inner surface of each of said body and said lid with the coating applied to said lid having a peripheral marginal edge portion protruding radially beyond the edge of said lid and adapted to be bent outwardly between said body and said lid, a first ring surrounding the upper edge of said body, a second ring disposed inwardly of said first ring, said body and the coating applied thereto, and said marginal edge portion, one of said rings comprising a closing ring, and means for tightening said closing ring whereupon said body and both of said coatings are pressed together between said rings and simultaneously pressed inwardly towards said lid.

4. A shipping container comprising, in combination, a container body made of fibrous material such as paperboard, a removable lid made of similar material, a liquid-tight coating applied to the inner surface of each of said body and said lid with the coating applied to said lid having a peripheral marginal edge portion protruding radially beyond the edge of said lid and adapted to be bent outwardly between said body and said lid, an inwardly extending circumferential rib formed on said body and defining a seat for said lid, and means for pressing said body and each of said coatings together and inwardly towards said lid and simultaneously pressing said lid and its coating firmly against said seat to form a liquid-tight closure.

References Cited by the Examiner

UNITED STATES PATENTS

2,018,595	10/35	Blair	217—44
2,307,923	1/43	Eggerss	229—5.7
2,651,432	9/53	McConnell	217—44
2,696,340	12/53	Bergstrom	229—5.7
2,727,673	12/55	Bergstrom	229—5.5
2,810,505	10/57	Kinna	229—5.7

FOREIGN PATENTS

884,130	12/61	Great Britain.

FRANKLIN T. GARRETT, *Primary Examiner.*