United States Patent

Baldwin

[15] **3,682,442**

[45] **Aug. 8, 1972**

[54] **TWO-SPEED WINCH**

[72] Inventor: **William C. Baldwin,** 2861 Monroe Avenue, Anaheim, Calif.

[22] Filed: **Nov. 17, 1969**

[21] Appl. No.: **877,262**

[52] **U.S. Cl.** **254/150,** 192/12

[51] **Int. Cl.** **B66d 1/30**

[58] **Field of Search** 254/150, 166; 114/111, 218; 192/12

[56] **References Cited**

UNITED STATES PATENTS

3,145,974	8/1964	Short	254/150
3,581,854	6/1971	Versoy	254/150 X
3,536,299	10/1970	McCloud et al.	254/150
3,292,905	12/1966	McCain	254/166
309,477	12/1884	Luther	254/150
733,795	7/1903	Barr	114/218
3,120,043	2/1964	Henley	114/218

FOREIGN PATENTS OR APPLICATIONS

971,333	9/1964	Great Britain	254/150
182,226	7/1922	Great Britain	114/111
731,014	3/1966	Canada	254/150

Primary Examiner—Evon C. Blunk
Assistant Examiner—Merle F. Maffei
Attorney—John E. Wagner

[57] **ABSTRACT**

A hand winch assembly having a central power input shaft to effect rotation of an external drum, the shaft when rotated clockwise effects direct rotation of the drum in a clockwise direction through a sprag clutch in a one-to-one ratio, the shaft when rotated in a counter-clockwise direction effects rotation of the drum in a clockwise direction through a planetary gear system and sprag clutch at a geared-down rotation.

The gearing assembly and clutches are located in the body and head portion of the winch thereby reducing the overall height. The working mechanism is entirely sealed from the external elements. The winch includes a disc-like mounting ring which is mounted relatively flush with the deck of the boat and the winch body may be attached and removed from the mounting ring without disturbing the seals.

4 Claims, 4 Drawing Figures

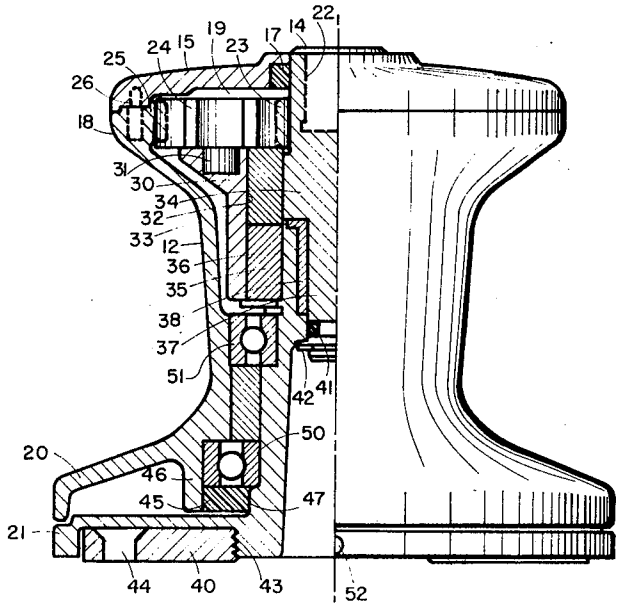

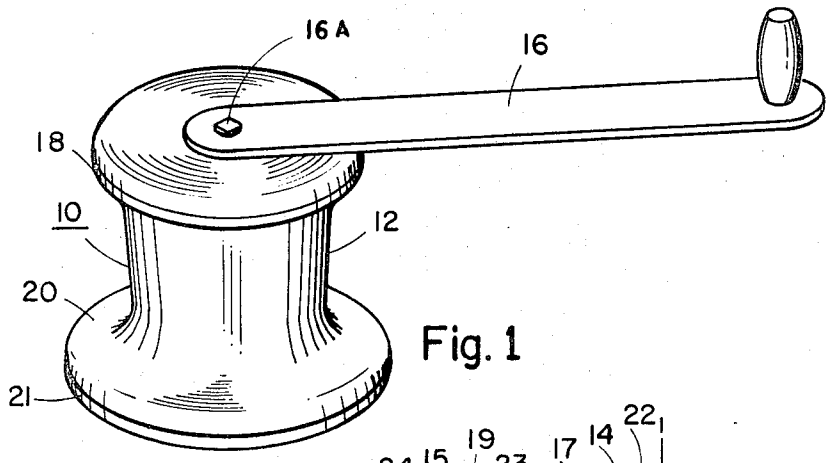

Fig. 1

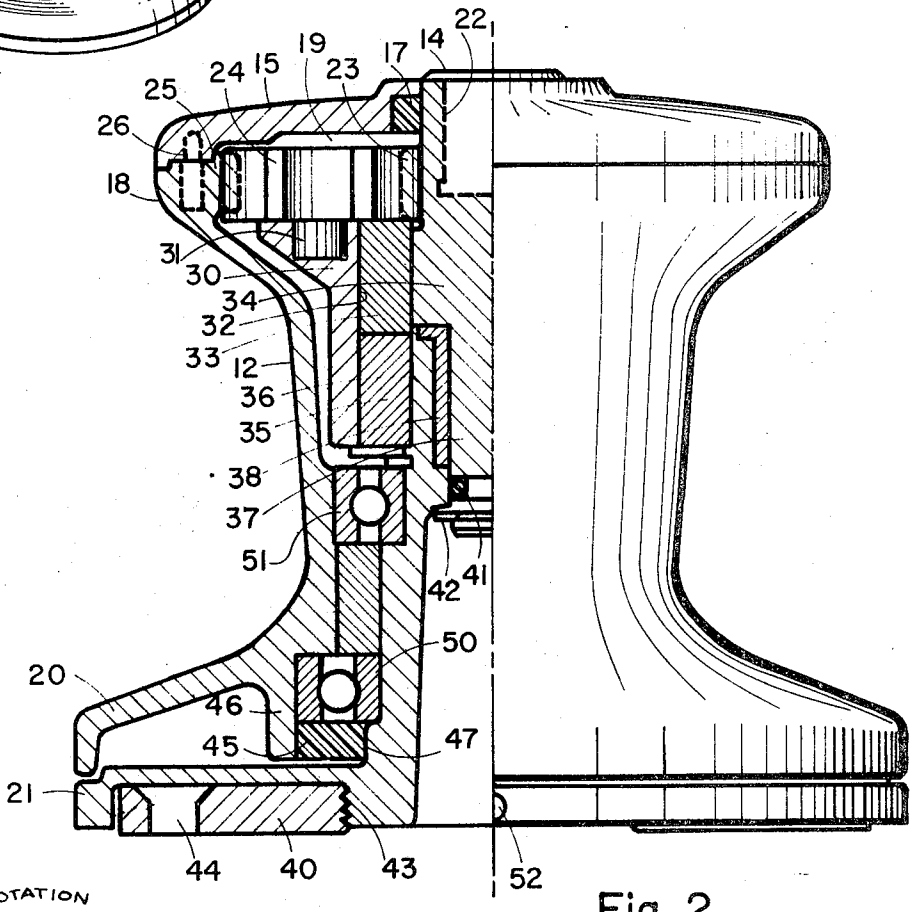

Fig. 2

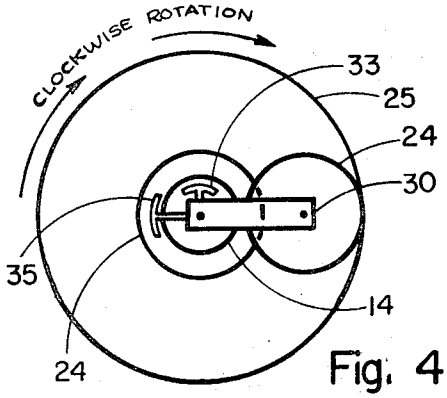

Fig. 4

INVENTOR
William C. Baldwin

BY John E. Wagner

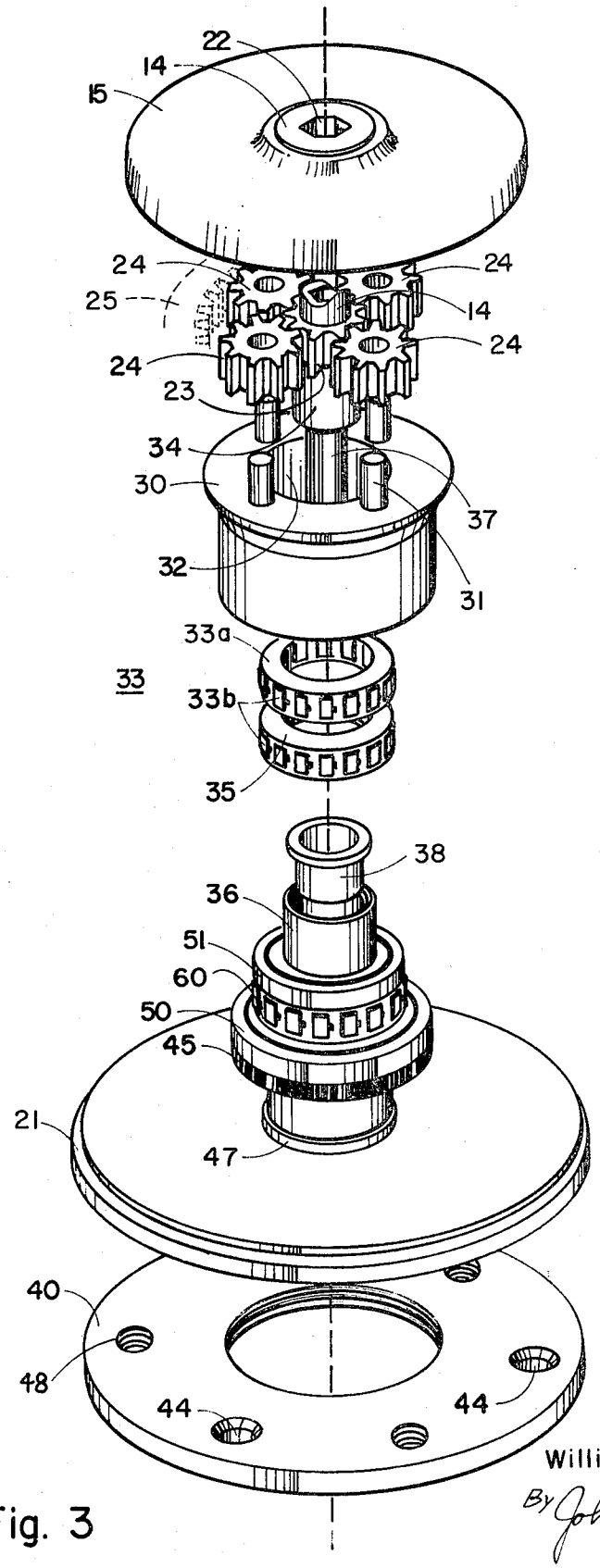

Fig. 3

INVENTOR
William C. Baldwin
By John E. Wagner

TWO-SPEED WINCH

BACKGROUND OF INVENTION

The field of this invention relates to manual actuated winches and more particularly to winches employed upon sailing craft. The winch assembly of this invention is an advancement in the art of the winch assembly described in our Patent application, Ser. No. 842,428, filed June 23, 1969, entitled SILENT WINCH.

Craft have employed the use of winches for many years. For example, upon power boats winches are frequently employed to "bring up" anchors or to reel in tie-up lines. However, upon sailboats there is a greater need for the use of winches. The sail must be constantly manipulated with respect to prevailing wind conditions or when the navigator wants to change course. The manipulation of the sail is conventionally accomplished by wrapping a boom line one or two turns about a winch drum, and drawing in or relaxing the line, depending on the position or change desired. Upon making the change, the free or loose end of the line may be secured to a nearby post or conventional cleat to hold the sail position until another change is desired.

When the making of a change is deemed to be necessary, either by reason of a change in wind conditions or a desire to change course, the time factor for making the change usually becomes important. It may be necessary to rapidly effect the change to avoid an adverse condition of the craft within the water or for reason of obtaining the most efficient operation of the craft during a race. In other instances, it may be desirable to obtain a slow change, but that change requiring a substantial winching force.

Heretofore, the winches that have been employed are generally of a single type. Each winch of the prior devices employs a spring biased pawl or pawls which cooperate with a series of ratchet teeth. As the winch drum is turned in one direction, the pawl or pawls cooperate with the ratchet teeth to prevent movement of the drum in the opposite direction. A disadvantage of winches used previously is that the "snapping" action of the spring biased pawl or pawls creates a significant amount of noise. This noise can be quite disturbing to passengers on board or, if the navigator is attempting to listen to a radio or another person, it is usually difficult for the navigator to hear while operating the winch.

In our copending application identified above, we describe and claim a silent winch employing sprag clutches which eliminate this disadvantage. The winch of that application is a single-speed winch and we have now discovered that in employing sprag clutches, it is possible to produce an improved two-speed winch.

Two-speed or geared winches are usually used for the main sail lines on a sailboat where the mechanical advantage of a substantial length handle and gearing is desirable because of winching and forces required. Additionally, if it is desirable for fast takeup the line may be affected by turning the handle in one direction and close or slow speed mechanically advantage takeup produced by rotation of the same handle in the opposite direction. Winches of this type are commonly referred to as two-speed or geared winches. Characteristically, they employ a rather deep base in the order of 3 to 4 inches in depth on which a winch drum is superimposed. The gear system is enclosed within the

base. Typically, the base portion is cup shaped and susceptible to capture water and producing corrosion damage to the working mechanism. With conventional winches, it is not possible to remove a winch without breaking the seals protecting the gearing and to remove a winch normally leaves exposed mounted holes in the deck.

It would be desirable to design a winch for water craft which is substantially silent in operation and is capable of operating at a plurality of different speed settings.

It would be further desirable to design a two-speed winch in which the operating mechanisms are well above the deck level, thoroughly sealed from the weather and the winch so arranged that it may be installed and removed without disturbing any of its rotational seals. Additionally, the winch base should remain in place on the deck as an unobtrusive member.

SUMMARY OF THE INVENTION

We have designed an improved two-speed hand-operated winch employing an internal planetary gear system totally sealed within the winch body and located in the region of the drum head. The planetary gear system is driven through and braked through a pair of sprag or one-way clutches without any pawls. The entire mechanism is located between a pair of seals, one near the input driving shaft opening and the second near the base.

The base of the winch is of low profile since it contains none of the driving mechanism and is secured by threads to a ring mounting plate permanently secured to the deck.

BRIEF DESCRIPTION OF THE DRAWINGS

FIG. 1 is an overall perspective view of the winch assembly of this invention contained within a drum;

FIG. 2 is a partial vertical sectional view of a winch assembly of FIG. 1 showing in more detail the arrangement of applicant's invention;

FIG. 3 is an exploded perspective view of the winch apparatus of this invention showing in greater detail the structure of applicant's invention; and

FIG. 4 is a simplified mechanical schematic drawing illustrating the operation of this invention.

DETAILED DESCRIPTION OF THE SHOWN EMBODIMENT

Referring particularly to the drawings, there is shown in FIG. 1 a winch **10** having a drum **12** and a central rotatable shaft **14** (of FIG. 2) operable by a crank **16**, including a square or noncircular shaft **16A**. Drum **12** is shaped to hold two or three pairs of a lanyard or line and restrain the line from being released. An upper flange **18** and lower flange **20** of the drum **12** tend to maintain the line upon the drum **12**.

The lower flange **20** of the drum **12** ends at a circular base portion **21** which presents the appearance of a disc ranging from one-fourth inch to one-half inch thickness depending upon the winch size. The base portion **21** actually does not constitute the mounting base of the winch but amovable portion of the winch which mounts the main shaft.

Now referring specifically to FIG. 2, operative arrangement of the winch as vertically sectioned may be more clearly seen. A shaft **14** is positioned at the axis of the winch and sealed to an upper housing cap **15** by an "**0**" ring of similar seal **17**. The shaft **14** extends into the interior cavity **19** of the winch and includes integral gearing which constitutes the sun gear **23** of a planetary gear system. Shaft **14** also includes an axial cavity **22** for the handle shaft **16A**. It should be noted that the cavity terminates in the region of the gear **23** but constitutes a closed hole so that there is no communication through opening **22** into the interior of the winch. The sun gear **23** mates with a plurality, for examples, four planet gears **24** which also engage integral ring gear teeth **25** in the interior of the drum head **18**.

It is apparent also from FIG. **2** that the cap **15** is secured to the drum **12** round its periphery by a plurality of screw or similar fasteners **26** to constitute a single member when the winch is manufactured. The cap **15** may be removed for servicing of the gear system. The planet gears **24** are carried on a carrier **30** with each of the planets mounted by integral stub shafts, for example, **31**, fitting in mating recesses in the carrier **30**. The planet carrier includes a cylindrical inner surface **32** which constitutes the braking surface with a first sprag type one-way clutch **33** which engages a drum portion **34** integral with the shaft **14**.

A second sprag clutch **35** similarly engages the surface **32** and cooperates to allow one-way movement only with a cylindrical surface **36** integral with the drum base member **21**. A sprag clutches **33** and **35** constitute one-way clutches described in more detail in our copending application identified above. It is recognized that other types of one-way clutches might be substituted for the members **33** and **35** to provide an operative winch. However, for the reasons explained in more detail in our copending application, the sprag one-way clutches are preferred.

The shaft **14** in the region of the clutch **35** includes a reduced diameter section **37** riding in a sleeve bearing **38** which is positioned central shaft opening of the base member **21**. An "**0**" ring or similar seal **41** prevents any ingress of moisture into the working mechanism of the winch. A retainer ring **42** transfers any axial loading on the drum to the base member **21** which in turn is secured by threads **43** to the base **40**. The base **40** is secured by flat head bolts unshown in the drawing to the deck. The bolts pass through rim openings **44**, one of which appears in the drawing.

A number of features of the invention are clearly evident from FIG. **2** and may be described prior to the explanation of the detailed operation. These features in particular have to do with the sealing and mounting arrangements of the winch.

SEAL ARRANGEMENT

It is noted in FIG. **2** that the recessed shaft **14** is mounted on the axis of the winch and passes through the cover **15**. Seal **17** is secured in a recess in the cap **15** and provides effective moisture seal between the rotating shaft **14** and the winch drum. All gearing and braking members are located below the seal **17** in the cavity **19** generally in the upper half of the winch. At the lower end of the shaft **14** is the "**0**" ring seal **41** securing or sealing the interior of the winch from moisture which might enter under the base.

The most critical seal in the winch is located between the lower drum portion **20** and the base **21**. It is a flat ring shaped seal **45**, for example, of neoprene rubber. The underside of the seal **45** is exposed to possible ingress of fluid between the drum **20** and the base **21**, but the narrow clearance passage between these members **20** and **21** shields the seal **45** from direct exposure. Seal **45** is positioned between a flange **46** which is integral with the drum **12** and annular step **47** on the base **21**. The step **47** also constitutes a stop for positioning a first set of ball bearings **50** of the winch.

It should be noted that the base **21** actually is not directly secured to the deck but is in threaded engagement with mounting plate **40**. Base **21** includes a pair of openings **52**, one of which is partially shown in FIG. **2** designed to accept a large spanner wrench used in installing and removing the winch. By rotating the winch and winch base **21** in a counter-clockwise direction, the entire winch is removed from the mounting plate **40** and none of the mechanism seals of the winch are disturbed. The winch is movable to any other position on the boat where a similar mounting plate **40** has previously been installed. Installation of the winch, removal and reinstallation at a different spot can be accomplished in a matter of minutes.

INTERNAL DETAILS OF THE WINCH

Please refer to FIG. **3** which the winch assembly of FIG. **2** is shown in an exploded view with the drum **12** removed and only the ring gear portion **25** shown in phantom. The cover **15** is illustrated as enclosing the upper end of shaft **14** with its polygonal opening **22** to receive a handle. The shaft **14** is shown broken appearing below the cover plate as including its integral gear teeth **23** constituting the sun gear of a planetary system. The four planet gears **24** are shown engaging sun gear **23** and the phantom ring gear **25**. The planet gears **24** are each positioned on the carrier **30** by four equally spaced shafts **31**. The carrier braking surface **32** is readily apparent as a cylindrical opening of such dimension that it receives the pair of sprag clutches **33** and **35**. The sprag clutches include a retainer ring **33***a* and a plurality of sprag members **33***b* having outer surfaces which engage the surface **32** and inner surfaces which engage the shaft **14** on surface **34**. The lower portion of shaft **14**, namely the stem **37**, may be seen extending below the planetary gears **24** into the cylindrical opening **32**.

The two sprag clutches **33** and **35** are shown in position for entry into the opening **32** with the sprag clutch **33** engaging surfaces **32** and **34** to prevent relative rotation between the shaft **14** and the carrier **30** in a counterclockwise direction while allowing free relative rotation in the opposite direction. The sprag clutch **35** similarly engages the surface **32** and surface **36** on the base member **21**, preventing relative rotation between the planetary carrier **30** and the rigid base in a counterclockwise direction while allowing relatively free rotation in the opposite direction. The bearing assembly **51** is shown on he vertical extension of the base **21** and below it a third sprag clutch **60** engaging the base member **21** and a cylindrical surface of the drum **12** unshown in the drawing. The sprag clutch **60** constitutes the basic braking element of the winch preventing relative rotation of the drum in the counterclockwise direction at any time. Positioned below the

sprag clutch **60** is the second roller bearing assembly **50** engaging the upright portion of base **21** and the unshown drum. Below the bearing **50** may be seen the seal **45** and step **47**. This seal, as is apparent from FIG. **2**, engages the base member **21** and the unshown drum.

The low mounting plate **40** with mounting holes **44** appear below the base member **21**. The simplicity of the mounting plate in its unobtrusive nature are apparent. The threads for securing the base **21** to the mounting plate **40** appear in the central circular opening of the plate **40**. Inasmuch **25** as the load applied on the winch drum transmitted to the base member **21** exerts a counter-clockwise torque, left handed threads are used in the mounting plate and base so that loading the winch tends to tighten the mounting rather than release it.

The mode of operation of the winch is illustrated particularly in FIG. **4**. For high speed operation the handle of FIG. **1** is turned in a clockwise direction. The sun gear **23** engages planet gear **24** which is restrained from rotation relative to sun gear **23** by sprag clutch **33** holding carrier **30** and the planet gear **24** directly drives the ring gear **25** integral with the drum. This operation is in a one-to-one speed ratio with the drum turning one full revolution for each revolution of the handle in a clockwise direction.

If the handle **16** is reversed and driven in a counter-clockwise direction, the winch is restrained from releasing the line by the one way clutch **60** unshown in FIG. **4**. But the sun gear **23** is then rotated counter-clockwise and the planet carrier **30** is allowed to rotate clockwise. The planet gear **24** then drives the ring gear **25** at a reduced speed. A four to one ratio reduction has been found to be desirable. In either the high speed or low speed operation the drum always turns in the same direction. Sprag clutch **35** prevents the carrier from counter-clockwise rotation at any time.

One other feature of the invention relates to the low profile of the winch. Since the base is only in the order of three-eights inch to three-fourths inch high depending upon the diameter of the winch the mean position for loading of the line is significantly less than prior art winches. Therefore the tip-over moment applied to the winch is reduced. Additionally there is no cup base to retain water.

The separate mounting ring **40** is of universal type since it includes not only countersunk mounting holes **44** for receiving flat head screws but also includes threaded open holes **48** suitable for machine screw mounting from the underside. This latter arrangement is particularly suitable for fiberglass hull boats.

The foregoing is representative of illustrative embodiments of this invention and is not to be construed as limiting. It is recognized that one skilled in the art can, through minor modification of the structure, produce a device different in certain details and respects but not departing from the true spirit and scope of the invention. This invention therefore is not limited by the embodiments shown above but rather than by the prior art and the following claims.

I claim:

1. A marine winch comprising:

a mounting plate designed for substantially flat permanent mounting on the deck of a boat;

said mounting plate including a central threaded aperture;

a winch base including an upstanding shaft portion and a threaded stub portion designed to engage the threads of said mounting plate, and

including a flange portion extending outward to the periphery of the winch,

a drum mounted for rotation about the upstanding portion of the base including internal braking means to prevent the rotation of the drum in one direction,

said drum portion including a lower flange extending outward to cover the base and mounting plate except for the edge thereof;

seal means between the drum and base; and

the edge of said base including means engageable by a wrench for removing the base from the mounting plate without disturbing said seal means.

2. The combination in accordance with claim **1** wherein the winch includes first seal means between the drum and the shaft and second seal mans between the drum and the base,

said first and second seal means being independent of the mounting and de-mounting portion of the base and mounting plate.

3. The combination in accordance with claim **1** including a planetary gear system including a shaft having and external input comprising a shaft extending to the top of said drum and sealed for rotation with respect to said drum and a sun gear fixed to the shaft within the winch,

a ring gear coupled to the drum and a planet gear system engaging the sun and ring gear wherein the planetary gear system is positioned within the region of the upper flange of the winch.

The combination in accordance with claim **3** wherein said shaft is rotatably secured to the base of the winch and a pair of sprag clutches engage the planet gear portion of the planetary gear system,

one of said sprag clutches allowing rotation in one direction only on the planet portion of the planetary gear system with respect to the shaft and the second of the sprag clutches allowing one-way rotation of the planet portion of the planetary gear system with respect to the base of the winch.

* * * * *