(19) Europäisches Patentamt
European Patent Office
Office européen des brevets

(11) EP 1 938 918 A1

(12) EUROPEAN PATENT APPLICATION
published in accordance with Art. 153(4) EPC

(43) Date of publication:
**02.07.2008 Bulletin 2008/27**

(21) Application number: **06797631.6**

(22) Date of filing: **07.09.2006**

(51) Int Cl.:
***B22C 9/04*** *(2006.01)* ***B22C 1/00*** *(2006.01)*
***B22C 1/08*** *(2006.01)* ***B22D 21/02*** *(2006.01)*

(86) International application number:
**PCT/JP2006/317771**

(87) International publication number:
**WO 2007/029785 (15.03.2007 Gazette 2007/11)**

(84) Designated Contracting States:
**DE FR GB IT**

(30) Priority: **07.09.2005 JP 2005259218**
**07.09.2005 JP 2005259219**

(71) Applicants:
- **IHI Corporation**
  **Tokyo 135-8710 (JP)**
- **Ishikawajima Precision Castings Co., Ltd.**
  **Akishima-shi, Tokyo (JP)**

(72) Inventors:
- **CHIKUGO, Kazuyoshi**
  **Koto-ku Tokyo 1358710 (JP)**
- **SATO, Shigeyuki**
  **Tokyo (JP)**

(74) Representative: **Schaumburg, Thoenes, Thurn, Landskron**
**Patentanwälte**
**Postfach 86 07 48**
**81634 München (DE)**

# (54) MOLD, METHOD FOR MANUFACTURE OF THE MOLD, AND MOLDED ARTICLE USING THE MOLD

(57) The object of the present invention is to provide a mold which has low reactivity with molten alloys and which is inexpensive, a method for manufacturing the same and a molded article using the mold. A mold 40 in accordance with the present invention serves for manufacturing a molded article 60 of a titanium-aluminum alloy or a titanium alloy. At least an initial layer 44a of a cavity surface 43 of a mold body 41 constituting the mold 40 is formed of a calcined product of a slurry comprising a filler having cerium oxide as a main component and a binder having silica sol as a main component.

[FIG.4]

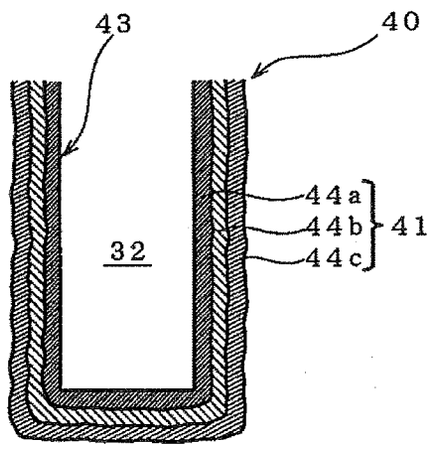


EP 1 938 918 A1

## Description

### TECHNICAL FIELD

**[0001]** The present invention relates to a mold used for manufacturing a molded article of a titanium-aluminum alloy or a titanium alloy, a method for manufacturing the same, and a molded article using the mold.

### BACKGROUND ART

**[0002]** Titanium-aluminum alloys composed of titanium aluminide (TiAl), which is an intermetallic compound of Ti and Al have features such as small weight and high strength. For this reason, titanium-aluminum alloys are promising materials for turbochargers for automobile engines and rotary member for gas turbine engines or aircraft jet engines.

**[0003]** Further, because titanium alloys have good corrosion resistance, small weight and biocompatibility, they have been widely used for automobiles, motorcycles, sports and leisure goods, artificial bones, artificial teeth, and the like.

**[0004]** In order to employ titanium-aluminum alloys or titanium alloys for the aforementioned members, in particular to commercial products, they have to be molded articles to reduce cost. Molds are required to manufacture molded articles, and a variety of molds therefor have been suggested (see, for example, Patent Documents 1 to 4).

**[0005]**

Patent Document 1: Japanese Patent Application Laid-open No. H5-123820.

Patent Document 2: Japanese Patent Application Laid-open No. 2003-225738.

Patent Document 3: Japanese Patent Application Laid-open No. H 5-277624.

Patent Document 4: Japanese Patent Application Laid-open No. H 6-292940.

### DISCLOSURE OF THE INVENTION

### PROBLEMS TO BE SOLVED BY THE INVENTION

**[0006]** However, because titanium alloys have high activity, a needle-like modified layer (oxygen-rich layer, surface hardened layer) that is called $\alpha$ case is sometimes formed in the surface layer portion of the obtained molded articles. The $\alpha$ case has higher hardness and lower machinability than the $\alpha$ phase of the matrix phase. Therefore, where the $\alpha$ case layer is too thick, a long time is required for chemical milling or mechanical cutting, causing increase in production cost and decrease in productivity.

**[0007]** Further, molds described in Patent Documents 1 to 4 above were designed for titanium alloys, and these molds have been often diverted as molds for titanium-aluminum alloys.

**[0008]** Because of high activity to titanium-aluminum alloys and titanium alloys, the reaction of molten alloy and mold has to be taken into account. In particular, because titanium-aluminum alloys have higher reactivity with molds. than titanium alloys, it is important to inhibit this reactivity. This is because, both Ti and Al are active metals, but the activity of Al is higher than that of Ti, and also because titanium-aluminum alloys have a melting point higher than titanium alloys.

**[0009]** Accordingly, the selection of constituent materials is important for molds designed for titanium-aluminum alloys and titanium alloys. The mold is composed of a ceramic and mainly comprises a filler and a binder for increasing bonding between the filler particles. Examples of constituent materials with low reactivity include zirconium oxide (zirconia), yttrium oxide (yttria), and calcium oxide (calcia) as the filler, and zirconia sol and organic binders (for example, resins) as the binder.

**[0010]** However, zirconia and yttria are expensive to be used as the fillers on the industrial scale. Calcia is difficult to handle because it decomposes on reaction with water.

**[0011]** Zirconia sol is expensive to be used as the binder on the industrial scale and has low strength at a temperature close to room temperature. Therefore, a separate binder is required to maintain the strength at room temperature. Further, organic binders are decomposed at a high temperature, and a separate binder has to be used to maintain the strength at a high temperature. As a result, the mold cost rises.

**[0012]** It is an object of the present invention, which has been created with the foregoing in view, to provide an inexpensive mold that has low reactivity with molten alloys, a method for manufacturing such mold and a molded article using the mold.

### MEANS FOR SOLVING THE PROBLEMS

**[0013]** The mold in accordance with the present invention that attains the above-described object is a mold for manufacturing a molded article of a titanium-aluminum alloy or a titanium alloy, wherein at least an initial layer of a cavity surface of a mold body is formed of a calcined product of a slurry comprising a filler having cerium oxide as a main component and a binder having silica sol as a main component.

**[0014]** It is preferred that the initial layer and a second layer of the cavity surface of the mold body be formed from the calcined product of the slurry. Further, the mold is a shell mold or a solid mold.

**[0015]** On the other hand, a method for manufacturing a mold in accordance with the present invention is for manufacturing a molded article of a titanium-aluminum alloy or a titanium alloy, comprising:

a step of forming an initial layer slurry film by applying an initial layer slurry comprising a filler having cerium oxide as a main component and a binder having silica sol as a main component to a surface of a wax mold that is an evaporative pattern mold and by drying thereof;
a step of successively forming slurry films of second and subsequent layers on a surface of the initial layer slurry film;
a step of forming a mold precursor having a cavity inside the initial layer slurry film by performing a wax removal treatment with respect to the wax mold that has been coated with at least two layers of slurry films; and
a step of forming a shell mold by performing a calcination treatment with respect to the mold precursor to solidify each slurry film.

**[0016]** Here, the step of forming the initial layer slurry film is preferably repeated again as a step for forming the second slurry film.

**[0017]** Further, the method for manufacturing a mold in accordance with the present invention is for manufacturing a molded article of a titanium-aluminum alloy or a titanium alloy, comprising:

a step of forming a block body of an initial layer slurry by applying an initial layer slurry comprising a filler having cerium oxide as a main component and a binder having silica sol as a main component to a surface of a wax mold that is an evaporative pattern mold and by drying thereof;
a step of forming a mold precursor having a cavity inside the block body by performing a wax removal treatment with respect to the wax mold having the block body; and
a step of forming a solid mold by performing a calcination treatment with respect to the mold precursor to solidify the block body.

**[0018]** Further, the method for manufacturing a mold in accordance with the present invention is for manufacturing a molded article of a titanium-aluminum alloy or a titanium alloy, comprising:

a step of forming an initial layer slurry film by applying an initial layer slurry comprising a filler having cerium oxide as a main component and a binder having silica sol as a main component to a surface of a wax mold that is an evaporative pattern mold and by drying thereof;
a step of forming a block body of the last layer slurry around the initial layer slurry film;
a step of forming a mold precursor having a cavity inside the initial layer slurry film by performing a wax removal treatment with respect to the wax mold that has the initial layer slurry film and the block body; and
a step of forming a solid mold by performing a calcination treatment with respect to the mold precursor to solidify the initial layer slurry film and the block body.

**[0019]** Here, it is preferred that the step of forming the initial layer slurry film be repeated again after the step of forming the initial layer slurry film, and the block body of the last layer slurry be formed around the initial layer slurry film having a two-layer structure.

**[0020]** The titanium-aluminum alloy molded article in accordance with the present invention is formed by casting in use of the above-described shell mold or solid mold.

**[0021]** Further, the titanium-aluminum alloy molded article in accordance with the present invention is a titanium alloy molded article that is formed by casting in use of the above-described shell mold or solid mold, wherein a thickness of an $\alpha$ case layer in the surface layer portion of the as-cast material is less than 300 $\mu$m.

## EFFECT OF THE INVENTION

**[0022]** The mold in accordance with the present invention demonstrates an excellent effect in making it possible to obtain a molded article of a titanium-aluminum alloy with good surface state even as-cast material or a molded article of a titanium alloy with reduced occurrence of $\alpha$ case in the surface layer.

## BRIEF DESCRIPTION OF THE DRAWINGS

**[0023]**

Fig. 1 is a cross-sectional view of a wax mold for use in the manufacture of a mold of one preferred embodiment of the present invention.
Fig. 2 illustrates a state after a slurry film has been formed around the wax mold in the process for manufacturing the mold of one preferred embodiment of the present invention.
Fig. 3 illustrates the state after wax removal in the process for manufacturing the mold of one preferred embodiment of the present invention.
Fig. 4 is a cross sectional view of the mold in one preferred embodiment of the present invention.
Fig. 5 illustrates the state in which a melt is poured into a mold cavity shown in Fig. 4.
Fig. 6 is a cross sectional view of a molded article formed by casting using the mold shown in Fig. 4.
Fig. 7 is a cross-sectional view of a wax mold used in the manufacture of a mold of another preferred embodiment of the present invention.
Fig. 8 illustrates a state after a slurry film has been formed around the wax mold in the process for manufacturing the mold of another preferred embodiment of the present invention.
Fig. 9 illustrates the formation of a slurry block body around a slurry film in the process for manufacturing the mold of another preferred embodiment of the

present invention.

Fig. 10 illustrates a state after the slurry block body has been formed in the process for manufacturing the mold of another preferred embodiment of the present invention.

Fig. 11 illustrates a state after the wax has been removed in the process for manufacturing the mold of another preferred embodiment of the present invention.

Fig. 12 is a cross sectional view of a mold of another preferred embodiment of the present invention.

Fig. 13 illustrates a state in which a melt has been poured into the cavity of the mold shown in Fig. 12

Fig. 14 is a cross sectional view of a molded article that is formed by casting using the mold shown in Fig. 12.

Fig. 15 is a planar observation view of a portion of a titanium-aluminum alloy molded article formed by casting by using a mold of one preferred embodiment of the present invention.

Fig. 16 is an enlarged view of the main portion 16 shown in Fig. 15.

Fig. 17 is a planar observation view of a portion of a titanium-aluminum alloy molded article formed by casting by using the conventional mold.

Fig. 18 is an enlarged view of the main portion 18 shown in Fig. 17.

Fig. 19 is a cross-sectional view illustrating an adhesion state of the initial layer slurry and the wax mold when the filler/binder ratio in the initial layer slurry is 1.8.

Fig. 20 is a cross-sectional view illustrating an adhesion state of the initial layer slurry and the wax mold when the filler/binder ratio in the initial layer slurry is 2.0.

Fig. 21 is a cross-sectional view illustrating an adhesion state of the initial layer slurry and the wax mold when the filler/binder ratio in the initial layer slurry is 3.0.

Fig. 22 is a cross-sectional observation view of a titanium alloy molded article formed by casting using a shell mold of one preferred embodiment of the present invention.

Fig. 23 is a cross-sectional observation view of a titanium alloy molded article formed by casting using a conventional shell mold.

Fig. 24 is a cross-sectional observation view of a titanium alloy molded article formed by casting using a solid mold of another preferred embodiment of the present invention.

Fig. 25 is a cross-sectional observation view of a titanium alloy molded article formed by casting using a conventional solid mold.

## EXPLANATION OF REFERENCE NUMERALS

**[0024]**

| | |
|---|---|
| 40 | shell mold (mold) |
| 41 | mold body |
| 43 | cavity surface |
| 44a | initial layer |
| 60 | molded article |

## BEST MODE FOR CARRYING OUT THE INVENTION

**[0025]** Colloidal silica (silica sol) has been used as a binder for casting molds for Ni-based alloys, Co-based alloys, and Fe-based alloys. Silica sol features chemical stability (low activity), low industrial cost, and a high strength from room temperature to a high temperature. However, silica sol is highly reactive with titanium-aluminum alloys and titanium alloys. For this reason, silica sol has been conventionally considered unsuitable for use as a binder for molds for titanium-aluminum alloys and titanium alloys.

**[0026]** However, the results of a keen study performed by the inventors demonstrated that by adjusting the constituent materials of a filler for a mold for a titanium-aluminum alloy or a titanium alloy, it is possible to prevent a vigorous reaction with the titanium-aluminum alloy or titanium alloy even when silica sol is used as a binder.

**[0027]** One preferred embodiment of the present invention will be described below with reference to the appended drawings.

**[0028]** A cross sectional view of a mold of one preferred embodiment of the present invention is shown in Fig. 4.

**[0029]** As shown in Fig. 4, in a mold (shell mold) 40 of the present embodiment, at least an initial layer (in Fig. 4, two layers, that is, an initial layer 44a and a second layer 44b of a cavity surface 43) of a surface (referred to hereinbelow as "cavity surface") 43 adjacent to a cavity 32 of a mold body 41 is formed from a calcined product (referred to hereinbelow as a cerium oxide - silica sol calcined product) of a slurry composed of a filler comprising cerium oxide as the main component and a binder comprising silica sol as the main component.

**[0030]** The mold body 41 has a multilayer structure comprising the initial layer (surfacemost layer) 44a, the second layer 44b, a third layer 44c ... . The slurry calcined product constituting the third layer 44c and subsequent layers may be the same as, or different from the cerium oxide - silica sol calcined product constituting the initial layer 44a and second layer 44b. For the third layer 44c and subsequent layers, a composition identical to that of the usual mold (for example, a calcined product of a slurry composed of a filler comprising at least one selected from zirconia, alumina, silica, mullite, zircon, and yttria as the main component and a binder comprising zirconia sol as the main component) can be applied as the slurry calcined product different from the cerium oxide - silica sol calcined product.

**[0031]** The major part, for example, 75 wt.% or more, preferably 80 wt.% or more of the filler of the initial layer, is cerium oxide, and the remainder is composed of at

least one oxide selected from zirconia, alumina, silica mullite, zircon, or yttria. It goes without saying, that the filler may be composed only of cerium oxide (filler containing 100 wt.% cerium oxide).

**[0032]** Further, the binder for example comprises silica sol (20 to 50% aqueous solution of silica sol) at 10 to 100 wt.%, preferably 50 to 100 wt.% of the entire binder, the remainder being composed of zirconia sol, yttria sol, alumina sol, or an organic binder.

**[0033]** At least the viscosity of the initial layer slurry is adjusted by the filler (gram) / binder (gram) ratio to a range of 2-4, preferably 2.5 to 3.5. Where the slurry viscosity is low, the slurry does not remain in the mold (the below-described wax mold 10) and peeling occurs. Fig. 19 shows that when the filler/binder ratio is 1.8, peeling occurs, and Fig. 20 shows that when the filler/binder ratio is 2.0, peeling is about to start. As shown in Fig. 21, when the filler/binder ratio is 3.0, peeling does not occur and a uniform film is obtained. When the slurry viscosity is too high, the slurry film becomes too thick, a long time is required for drying, and uniform drying is not attained, thereby causing "non-uniformity". For this reason the filler/binder ratio is taken to be equal to or below 4.0.

**[0034]** In the shell mold 40 of this embodiment, the explanation is conducted with respect to the case in which the mold body 41 has a three-layer structure, but the present invention is not limited to such configuration. For example, the mold body 41 can have a two-layer structure or a structure comprising four or more layers.

**[0035]** In the shell mold 40 of this embodiment, the explanation is conducted with respect to the case in which the initial layer 44a and the second layer 44b are composed of the cerium oxide - silica sol calcined product (materials of the same type), but the present invention is not limited to such configuration. For example, when the thickness of the initial layer 44a is sufficiently large (for example, in the case where the thickness of the initial layer 44a is 500 μm or more), it is preferred that only the initial layer 44a be formed from cerium oxide - silica sol calcined product, and that the second and subsequent layers be from the same material as the usual molds (for example, a calcined product of a slurry composed of a filler comprising zirconium oxide as the main component and a binder comprising zirconia sol as the main component), and with consideration for coating workability, a slurry may be used in which the filler/binder ratio is decreased and viscosity is reduced by comparison with those of the initial layer.

**[0036]** A method for manufacturing the mold of the present embodiment will be explained below with reference to the appended drawings.

**[0037]** First, as shown in Fig. 1, a wax mold 10 of the same shape and size as a target precision molded article (see the below-described Fig. 6) is prepared in advance.

**[0038]** Then, an initial layer slurry is coated around the wax mold 10, then the initial layer stucco is coated, and then dried, to form an initial layer slurry film 24a, as shown in Fig. 2. Then, a second layer slurry is coated around the initial layer slurry film 24a, the second layer stucco is coated, and then dried, to form the second layer slurry film 24b. The initial layer slurry and the second layer slurry are identical. In other words, the initial layer slurry film 24a and the second layer slurry film 24b constitute a two-layer structure of the initial layer slurry film 24a.

**[0039]** Here, the initial layer slurry and the second layer slurry are prepared, for example, by mixing 1 kg of a binder comprising silica sol as the main component with 2 to 4 kg of a filler comprising cerium oxide as the main component. For example, at least one compound selected from zirconia, alumina, silica, mullite, and yttria of about #60 to 160 mesh can be used as the stucco (refractory particles that are scattered over, and caused to adhere to the slurry surface) of the initial layer and second layer, but no specific limitation is placed on the particle size and material thereof. A dipping method, a blowing method, and a coating method can be used for applying the slurry, but the dipping method is preferred.

**[0040]** A third layer slurry is then coated around the second layer slurry film 24b, then the third layer stucco is coated, and then dried to form a third layer slurry film 24c. Here, the steps of forming the slurry films of the third and subsequent layers are performed appropriately and repeatedly as necessary. As a result, the thickness of the entire slurry film is controlled to the desired thickness. No specific limitation is placed on the third layer slurry and the slurry of subsequent layers, and also on the constituent materials of the third layer stucco and the stucco of subsequent layers, and any slurry and stucco that have been usually used for shell molds can be applied.

**[0041]** The wax of the wax pattern 10 is then removed using steam, whereby a mold precursor 30 is obtained, as shown in Fig. 3. The mold precursor 30 has a cavity 32 inside the precursor body 31 configured of three layers of slurry films 24a, 24b, 24c.

**[0042]** The mold (shell mold) 40 of the present embodiment is then obtained, as shown in Fig. 4, by subjecting the mold precursor 30 to calcination treatment. The shell mold 40 has the cavity 32 inside the mold body 41 configured of three layers: initial layer 44a, second layer 44b, and third layer 44c.

**[0043]** Then, as shown in Fig. 5, a melt 50 of a titanium-aluminum alloy or titanium alloy is poured into the cavity 32 of the shell mold 40 and casting is performed. The shell mold 40 is then cooled to solidify the melt 50, thereby completing the casting process. As a result, a cast body is formed inside the shell mold 40.

**[0044]** The shell mold 40 is then dipped into a high-temperature alkali bath or the like, the shell, that is, the mold body 41 is dissolved and removed, and knockout is performed to obtain a molded article 60 of a titanium-aluminum alloy or a titanium alloy, as shown in Fig. 6. A physical method (for example, blast cleaning) can used for the knockout. Sandblasting, shot blasting, or water jet (blowing of high-pressure water) may be used for blast cleaning. Shakeout may be also used as a physical method other than blast cleaning.

**[0045]** The effect of the mold 40 of the present embodiment will be explained below.

**[0046]** In the mold (shell mold) 40 of the present embodiment, the initial layer 44a and the second layer 44b of the cavity surface 43 of the mold body 41 that comes into direct contact with the melt 50 of titanium-aluminum alloy is formed from the cerium oxide - silica sol calcined product.

**[0047]** Here, cerium oxide used as the main component of the filler of the shell mold 40 is hardly a stable oxide in comparison with zirconia or yttria. This is also clear from the comparison of free energies.

**[0048]** However, cerium oxide demonstrates excellent stability with respect to Ti and neither reacts directly with Ti nor is reduced by the melt 50 of titanium-aluminum alloy poured into the cavity 32 of the shell mold 40. The inventors noticed this specific feature of cerium oxide. Thus, by using cerium oxide as the main component of the filler of the mold body 41, it is possible to prevent the melt 50 of titanium-aluminum alloy from reacting with the mold body 41 and oxidizing inside the cavity 32.

**[0049]** Further, silica sol that is used as the main component of the binder of the mold body 41 usually reacts vigorously with the melt 50 of titanium-aluminum alloy. However, by using cerium oxide as the main component of the filler, as in the shell mold 40 of the present embodiment, it is possible to prevent a vigorous reaction between silica sol and titanium-aluminum alloy even when silica sol is used for the binder. Further, because silica sol is chemically stable (low activity), industrially inexpensive, and has a high strength within a range from room temperature to a high temperature, when silica sol is used, the strength is maintained with single sol and it is not necessary to use other sols or organic binders for the binder.

**[0050]** Further, because cerium oxide is less expensive than zirconia or yttria, using cerium oxide as the main component of the filler of the shell mold 40 makes it possible to reduce the cost of materials for the mold. On the other hand, because silica sol has been used as a binder for the usual molds (for example, molds for Ni-based alloys), by using silica sol as the main component of the binder for the shell mold 40, it is possible to expect a significant cost reduction since the binder can be shared. Because of these factors, an inexpensive shell mold 40 can be obtained.

**[0051]** By forming the initial layer 44a and second layer 44b of the cavity surface 43 of the mold body 41 from the cerium oxide - silica sol calcined product, it is possible to suppress reliably (or almost reliably) the oxidation of titanium-aluminum alloy and the reaction between silica sol and titanium-aluminum alloy, to suppress the formation of a layer containing a large amount of oxygen on the surface of the molded article 60, and to inhibit the adhesion (baking) of the mold body 41 to the surface of the molded article 60.

**[0052]** For example, as shown in Fig. 15 and Fig. 16, in the titanium-aluminum alloy molded article 150 that was formed by casting using the shell mold 40 of the present embodiment, practically no baking of the mold body to the surface of the molded article was observed. Thus, the titanium-aluminum alloy molded article 150 had beautiful surface appearance and a smooth surface. By contrast, as shown in Fig. 17 and Fig. 18, in the titanium-aluminum alloy molded article 160 formed by casting using zirconia as the main component of the filler and silica sol as the main component of the binder of the mold, a large amount of baked material 161 of the mold body appeared on the surface of the molded article. Thus, the titanium-aluminum alloy molded article 160 had poor surface appearance, a rough surface, and poor surface state.

**[0053]** Thus, in the titanium-aluminum alloy molded article 150 formed by casting using the shell mold 40 of the present embodiment, practically no mold body is baked to the molded article surface. Therefore, good surface state can be obtained by simple blast cleaning. For example, the titanium-aluminum alloy molded article 150 has an average surface roughness of an as-molded article of 200 μm or less, preferably 50 μm or less. Therefore, even the as-cast titanium-aluminum alloy molded article 150 has a sufficiently good surface state and does not require surface finishing treatment such as chemical milling or mechanical cutting (or required only very small surface finishing). Therefore, the titanium-aluminum alloy molded article 150 makes it possible to reduce the number of production steps, reduce the production cost, and improve productivity in comparison with the conventional titanium-aluminum alloy molded article 160.

**[0054]** The shell mold 40 of the present embodiment can be manufactured by changing the formation steps of the initial layer slurry film 24a and the second layer slurry film 24b (or only the initial layer slurry film 24a). Therefore, the shell mold 40 of the present embodiment can be manufactured without substantial changes in the already existing production line for the conventional shell mold and, as a consequence, the increase in production cost can be suppressed.

**[0055]** By performing casting using the melt 50 of a titanium alloy in the shell mold 40 of the present embodiment, it is possible to inhibit the occurrence of a hardened layer (α case) comprising a large amount of oxygen in the surface layer portion of the molded article 60. The thickness of the α case layer occurring in the surface layer portion of the obtained molded article 60 is thin, which is less than 300 μm, preferably less than 250 μm.

**[0056]** For example, as shown in Fig. 22, in a titanium alloy molded article 220 formed by casting using the shell mold 40 of the present embodiment, the thickness of the α case layer occurring in the surface layer portion was about 220 μm. By contrast, as shown in Fig. 23, in the titanium alloy molded article 230 formed by casting using zirconia as the main component of the filler and silica sol as the main component of the binder of the mold, the thickness of the α case layer occurring in the surface layer portion was about 500 μm. Therefore, it is clear

that the thickness of the α case layer in the titanium alloy molded article 220 is less than half that in the titanium alloy molded article 230.

**[0057]** Thus, in the titanium alloy molded article 220 formed by casting using the shell mold 40 of the present embodiment, the occurrence of the α case layer in the surface layer portion is reduced. Therefore, a time required for surface treatment (chemical milling, mechanical cutting, or the like) is shortened in comparison with that for the conventional titanium alloy molded article 230. Accordingly, productivity of the titanium alloy molded article 220 is increased and the production cost of the titanium alloy molded article 220 can be reduced. Further, because no significant surface treatment is required for the titanium alloy molded article 220 to obtain the final product and the difference in dimensions between the titanium alloy molded article 220 and the final product is small, the material yield is good and the material cost of the titanium alloy molded article 220 can be reduced.

**[0058]** The mold 40 of the present embodiment is suitable as a mold for precision molded articles. Examples of titanium-aluminum alloy precision molded articles include rotary members for turbochargers for automobile engines, gas turbine engines, and aircraft jet engines, and also heat-resistant tools. Examples of titanium alloy precision molded articles include automobile and motorcycle parts, sports and leisure articles, artificial bones, artificial teeth, and heat exchangers.

**[0059]** Another embodiment of the present invention will be described below with reference to the appended drawings.

**[0060]** A cross sectional view of the mold of another preferred embodiment of the present invention is shown in Fig. 12.

**[0061]** As shown in Fig. 12, in the mold (solid mold) 120 of the present embodiment, at least the initial layer (in Fig. 12, two layers: an initial layer 44a and a second layer 44b of a cavity surface 123) of the cavity surface 123 of a mold body 121 is formed from a cerium oxide - silica sol calcined product.

**[0062]** The mold body 121 is configured by a block-shaped body portion 124 and a layer portion 125 adjacent to a cavity 112. The layer portion 125 has a two-layer structure comprising the initial layer 44a and the second layer 44b. The slurry calcined product constituting the body portion 124 may be same as, or different from the cerium oxide - silica sol calcined product constituting the initial layer 44a and the second layer 44b. For the body portion 124, a composition identical to that of the usual mold (for example, a calcined product of a slurry composed of a filler comprising at least one selected from zirconia, alumina, silica, mullite, zircon, and yttria as the main component and a binder comprising zirconia sol as the main component) can be applied as the slurry calcined product different from the cerium oxide - silica sol calcined product.

**[0063]** The cavity surface 123 of the mold body 121 in the shell mold 120 of the present embodiment may also have a one-layer structure or a structure comprising three or more layers.

**[0064]** When the thickness of the initial layer 44a in the solid mold 120 of the present embodiment is sufficiently large, only the initial layer 44a may be formed from the cerium oxide - silica sol calcined product, and the second layer 44b may be from the same material as the body portion 124.

**[0065]** A method for manufacturing the mold of the present embodiment will be explained below with reference to Fig. 7 to Fig. 14. Components identical to those shown in Fig. 1 to Fig. 6 are denoted by identical reference numerals and the explanation of these components is omitted.

**[0066]** First, as shown in Fig. 7, a wax mold of the same shape and size as a target precision case article (see the below-described Fig. 14) is prepared in advance.

**[0067]** Then, an initial layer slurry is coated around the wax mold 70, then the initial layer stucco is coated, and then dried, to form an initial layer slurry film 24a, as shown in Fig. 8. Then, a second layer slurry is coated around the initial layer slurry film 24a, the second layer stucco is coated, and then dried, to form the second layer slurry film 24b. The initial layer slurry and the second layer slurry are identical. In other words, the initial layer slurry film 24a and the second layer slurry film 24b constitute a two-layer structure of the initial layer slurry film 24a.

**[0068]** Then, as shown in Fig. 9, the wax mold 70 provided with the slurry films 24a, 24b is disposed in a space 92 of a mold box 91, and a last layer slurry 93 is injected into the space 92. The last layer slurry 93 is of a type that cures naturally with the passage of time and may appropriately contain an organic compound (for example, a phenolic resin), a curing agent, and a refractory material. Natural curing of the last layer slurry 93 forms, as shown in Fig. 10, a block body 103 of the last layer slurry 93 around the wax mold 70 provided with the slurry layers 24a, 24b.

**[0069]** The wax of the wax mold 70 is then removed using steam and a mold precursor 110 is obtained, as shown in Fig. 11. The mold precursor 110 has a cavity 112 inside a precursor body 111. The precursor body 111 is composed of a block body 103, which is a body portion, and slurry films 24a, 24b adjacent to the cavity 112.

**[0070]** A mold (solid mold) 120 of the present embodiment is then obtained, as shown in Fig. 12, by performing calcination treatment of the mold precursor 110. The solid mold 120 has the cavity 112 inside the mold body 121 composed of the body portion 124 and the layer portion 125.

**[0071]** Then, as shown in Fig. 13, the melt 50 of a titanium-aluminum alloy or a titanium alloy is poured into the cavity 112 of the solid mold 120 and casting is performed. The solid mold 120 is thereafter cooled to solidify the melt 50, and the casting process is completed. As a result, a cast body is formed inside the solid mold 120.

**[0072]** Then, as shown in Fig. 14, a molded article 140

of titanium-aluminum alloy or titanium alloy is obtained by removing the cast body from the solid mold 120.

**[0073]** In the method for manufacturing the mold 120 of the present embodiment, the case is explained in which the block body 103 of a last layer slurry 93 is formed around the slurry films 24a, 24b of a two-layer structure, but this configuration is not limiting. For example, the block body may be directly formed around the wax mold 70 in one manufacturing process. Thus, it is possible to dispose the wax mold 70 inside the space 92 of the mold box 91, then pour the last layer slurry 93 into the space 92, and form the block body composed of only the last layer slurry 93 directly around the wax mold 70. The last layer slurry 93 is identical to the initial layer slurry.

**[0074]** The effect obtained with the mold 120 of the present embodiment is identical to that obtained with the mold 40 of the above-described embodiment.

**[0075]** By performing casting using the melt 50 of a titanium alloy in the solid mold 120 of the present embodiment, it is possible to inhibit the occurrence of a hardened layer ($\alpha$ case) comprising a large amount of oxygen in the surface layer portion of the molded article 140, and the thickness of the $\alpha$ case layer is thin, which is less than 300 $\mu$m. For example, as shown in Fig. 24, in a titanium alloy molded article 240 formed by casting using the solid mold 120 of the present embodiment, the thickness of the $\alpha$ case layer occurring in the surface layer portion was about 280 $\mu$m. By contrast, as shown in Fig. 25, in the titanium alloy molded article 250 formed by casting using zirconia as the main component of the filler and silica sol as the main component of the binder of the mold, the thickness of the $\alpha$ case layer occurring in the surface layer portion was about 500 $\mu$m. Therefore, it is clear that the thickness of the $\alpha$ case layer in the titanium alloy molded article 240 is about half that in the titanium alloy molded article 250.

**[0076]** The mold 120 of the present embodiment is suitable as a mold for ultralarge molded articles, decorative articles, artificial teeth, and artificial bones than the molds for precision molded articles. Because the mold 120 has high endurance and small number of layers, it simplifies the manufacturing steps and, therefore, demonstrates excellent cost performance.

**[0077]** It goes without saying that the present invention is not limited to the above-described embodiments and may be modified in a variety of ways.

## Claims

**1.** A mold for manufacturing a molded article of a titanium-aluminum alloy or a titanium alloy, wherein at least an initial layer of a cavity surface of a mold body is formed of a calcined product of a slurry comprising a filler having cerium oxide as a main component and a binder having silica sol as a main component.

**2.** The mold according to claim 1, wherein the initial layer and a second layer of the cavity surface of the mold body are formed from the calcined product of the slurry.

**3.** The mold according to claim 1 or 2, wherein the mold is a shell mold.

**4.** The mold according to claim 1 or 2, wherein the mold is a solid mold.

**5.** A method for manufacturing a mold for manufacturing a molded article of a titanium-aluminum alloy or a titanium alloy, comprising:

a step of forming an initial layer slurry film by applying an initial layer slurry comprising a filler having cerium oxide as a main component and a binder having silica sol as a main component to a surface of a wax mold that is an evaporative pattern mold, and by drying thereof;
a step of successively forming slurry films of second and subsequent layers on a surface of the initial layer slurry film;
a step of forming a mold precursor having a cavity inside the initial layer slurry film by performing a wax removal treatment with respect to the wax mold that has been coated with at least two slurry films; and
a step of forming a shell mold by performing a calcination treatment with respect to the mold precursor to solidify each slurry film.

**6.** The method for manufacturing a mold according to claim 5, wherein the step of forming the initial layer slurry film is repeated again as a step for forming the second slurry film.

**7.** A method for manufacturing a mold for manufacturing a molded article of a titanium-aluminum alloy or a titanium alloy, comprising:

a step of forming a block body of an initial layer slurry by applying the initial layer slurry comprising a filler having cerium oxide as a main component and a binder having silica sol as a main component to a surface of a wax mold that is an evaporative pattern mold, and by drying thereof;
a step of forming a mold precursor having a cavity inside the block body by performing a wax removal treatment with respect to the wax mold having the block body; and
a step of forming a solid mold by performing a calcination treatment with respect to the mold precursor to solidify the block body.

**8.** A method for manufacturing a mold for manufacturing a molded article of a titanium-aluminum alloy or

a titanium alloy, comprising:

a step of forming an initial layer slurry film by applying an initial layer slurry comprising a filler having cerium oxide as a main component and a binder having silica sol as a main component to a surface of a wax mold that is an evaporative pattern mold, and by drying;
a step of forming a block body of a last layer slurry around the initial layer slurry film;
a step of forming a mold precursor having a cavity inside the initial layer slurry film by performing a wax removal treatment with respect to the wax mold that has the initial layer slurry film and the block body; and
a step of forming a solid mold by performing a calcination treatment with respect to the mold precursor to solidify the initial layer slurry film and the block body.

**9.** The method for manufacturing a mold according to claim 8, wherein the step of forming the initial layer slurry film is repeated again after the step of forming the initial layer slurry film to form the block body of the last layer slurry around the initial layer slurry film having a two-layer structure.

**10.** A titanium-aluminum alloy molded article that is formed by casting in use of the mold according to claim 3 or 4.

**11.** A titanium alloy molded article that is formed by casting in use of the mold according to claim 3 or 4, wherein a thickness of an $\alpha$ case layer in the surface layer portion of the as-cast material is less than 300 $\mu$m.

[FIG. 1]

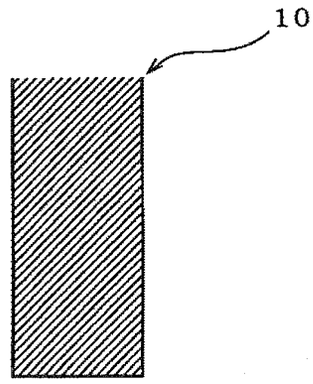


[FIG.2]

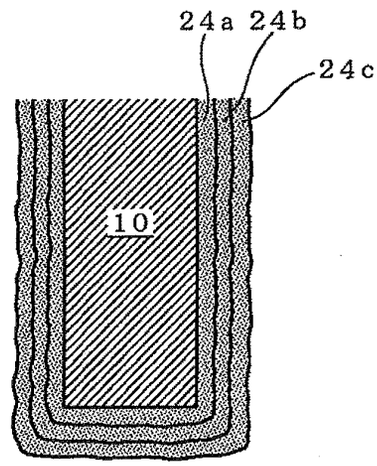


[FIG.3]

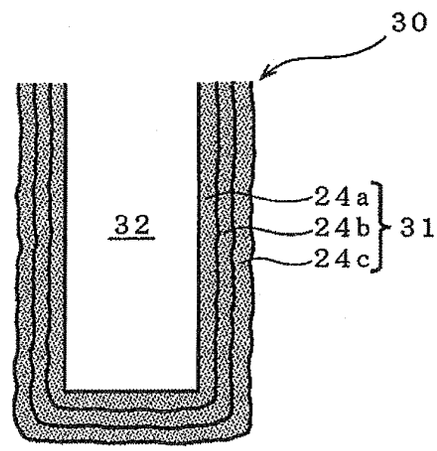

[FIG.4]

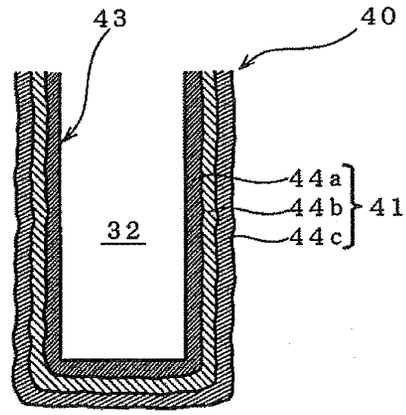


[FIG.5]

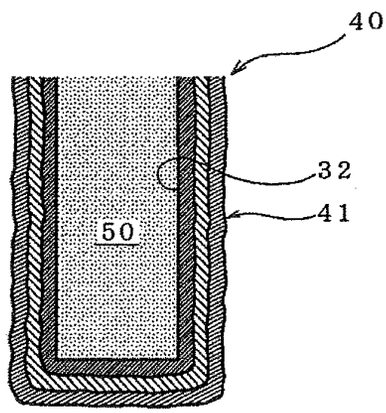


[FIG.6]

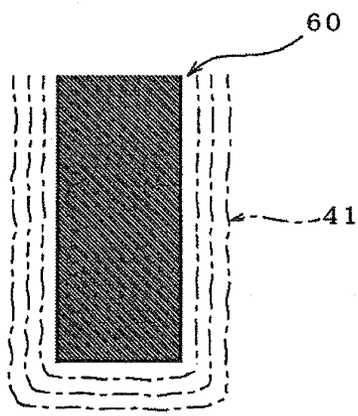

[FIG.7]

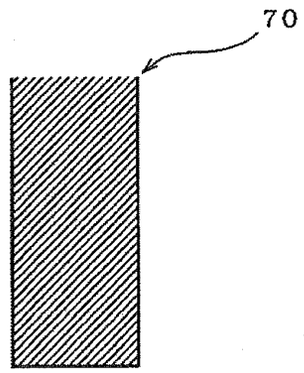


[FIG.8]

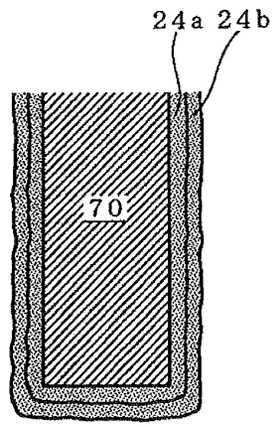


[FIG.9]

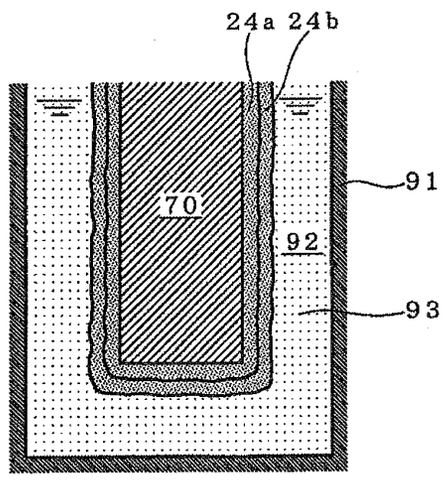

[FIG.10]

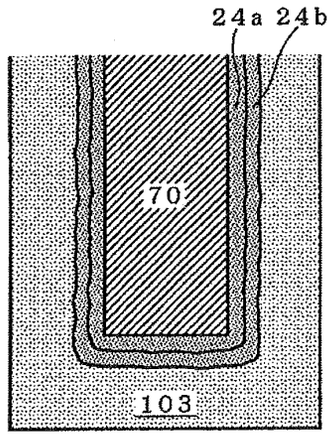


[FIG.11]

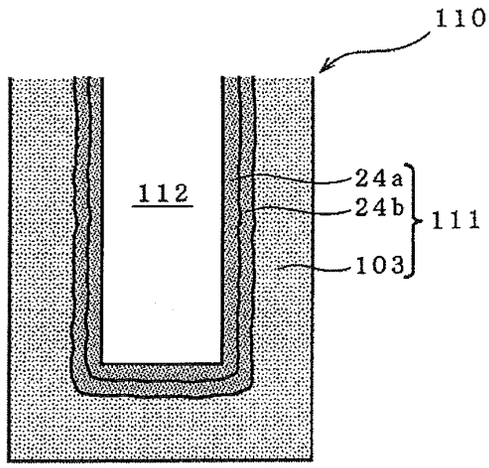


[FIG.12]

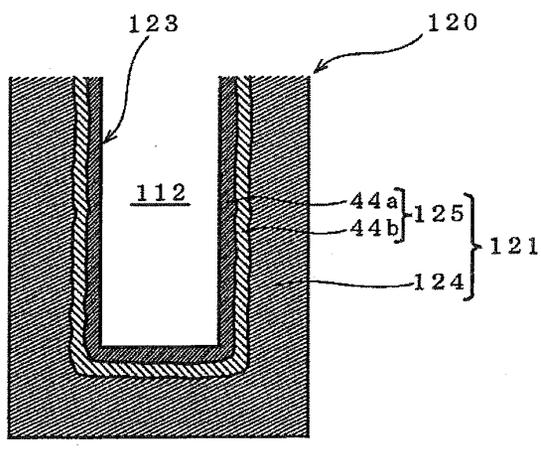

[FIG.13]

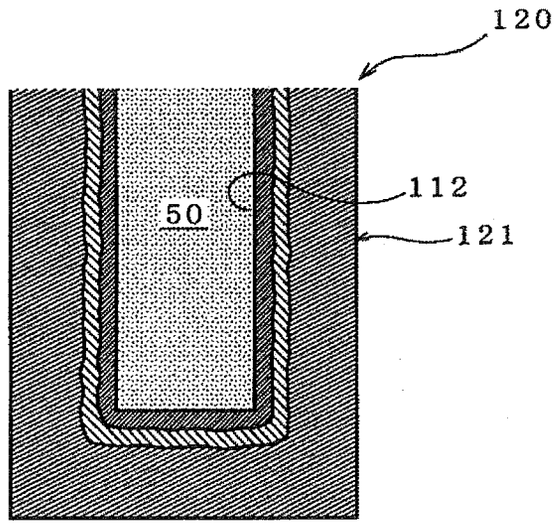


[FIG.14]

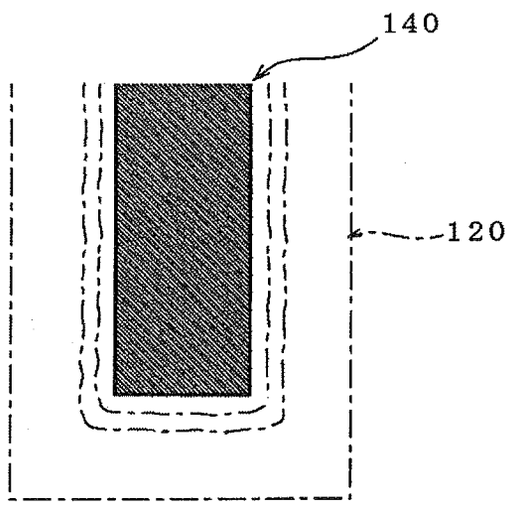

[FIG.15]

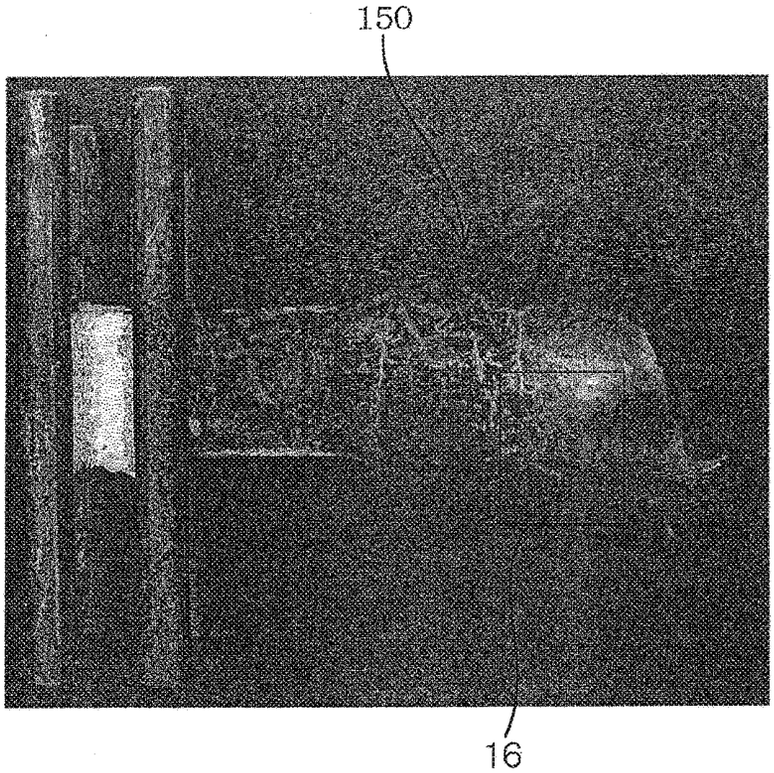


[FIG.16]

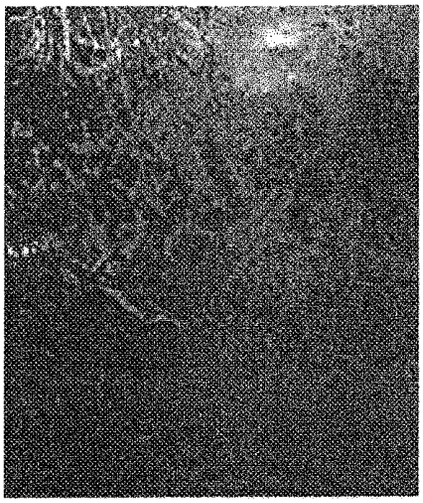

[FIG.17]

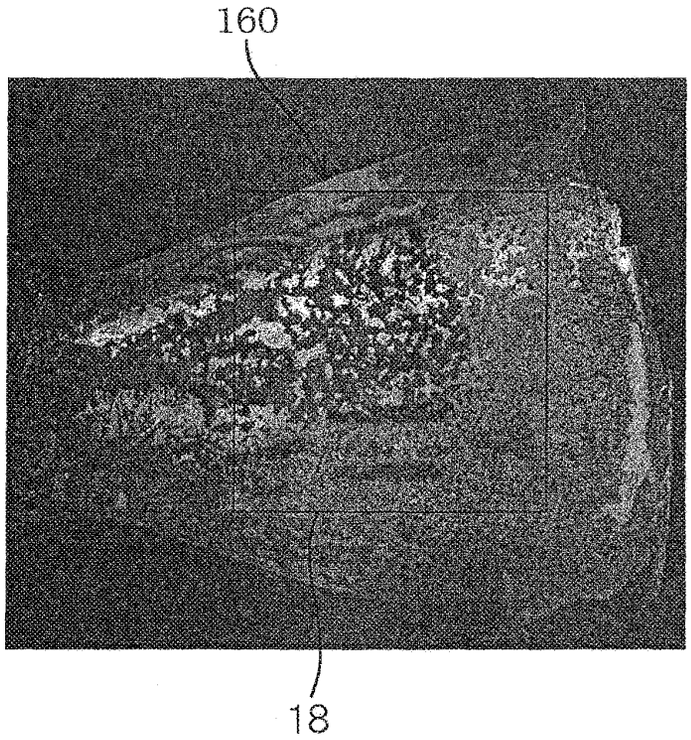


[FIG.18]

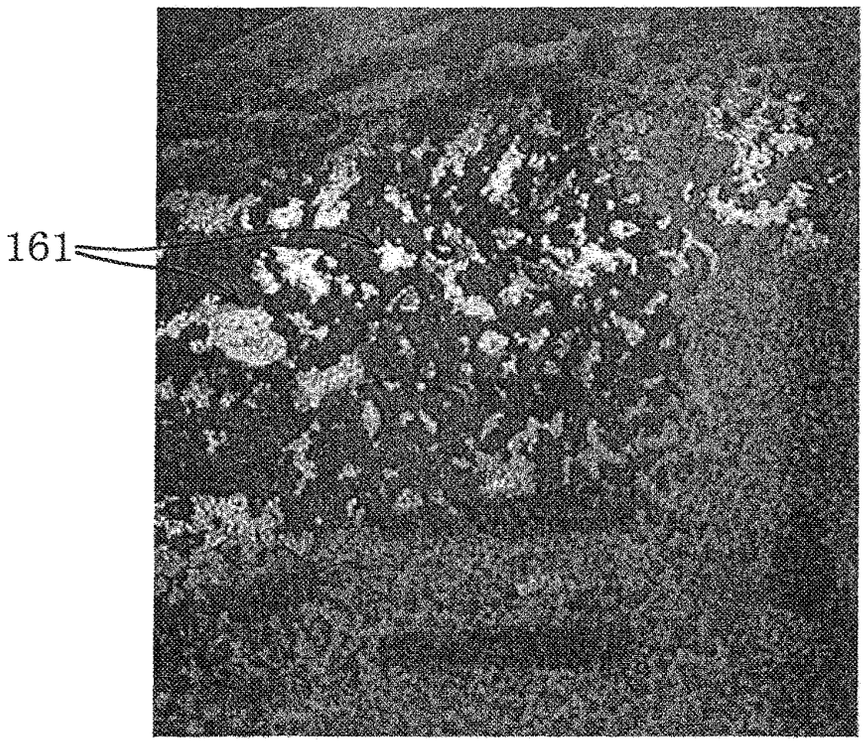

[FIG.19]

FILLER/BINDER=1.8
PEELING

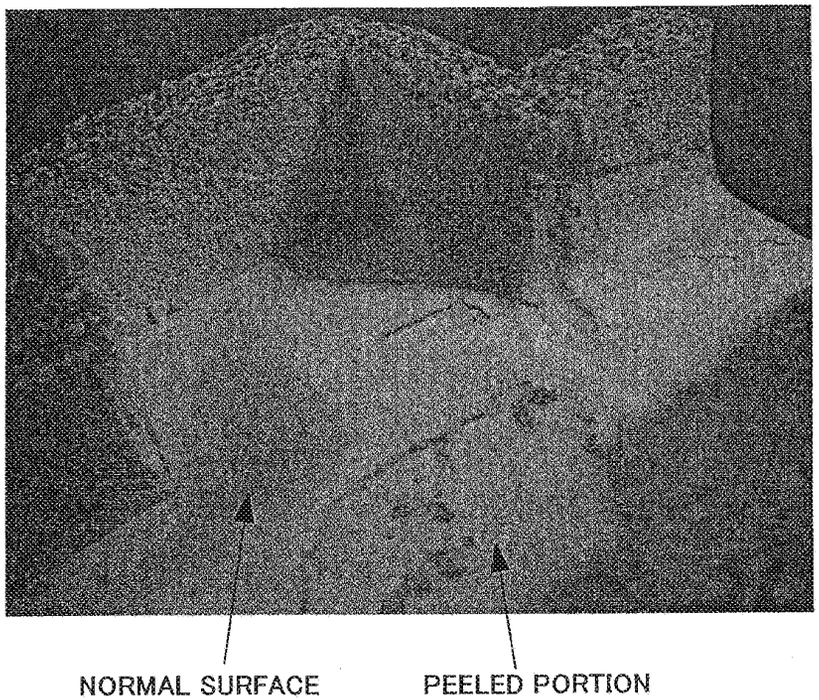


[FIG.20]

FILLER/BINDER=2.0

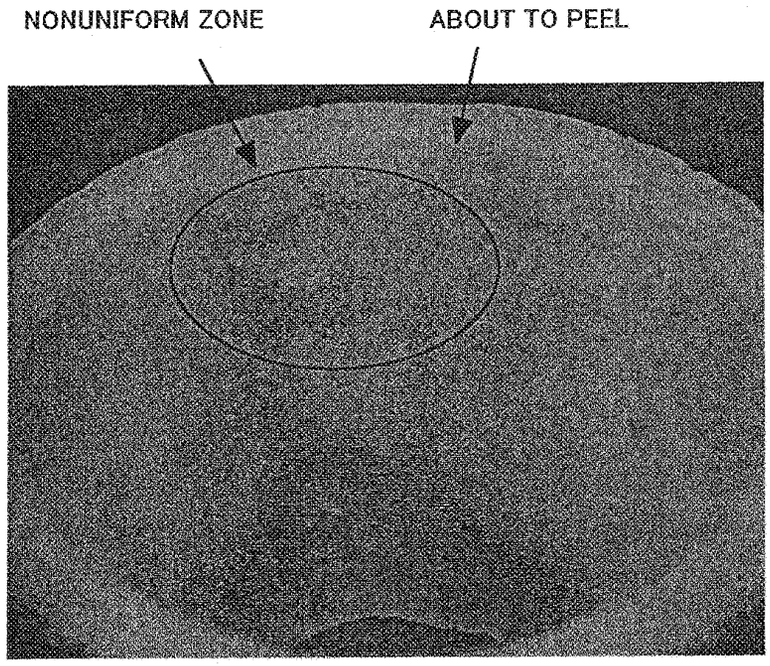

[FIG.21]

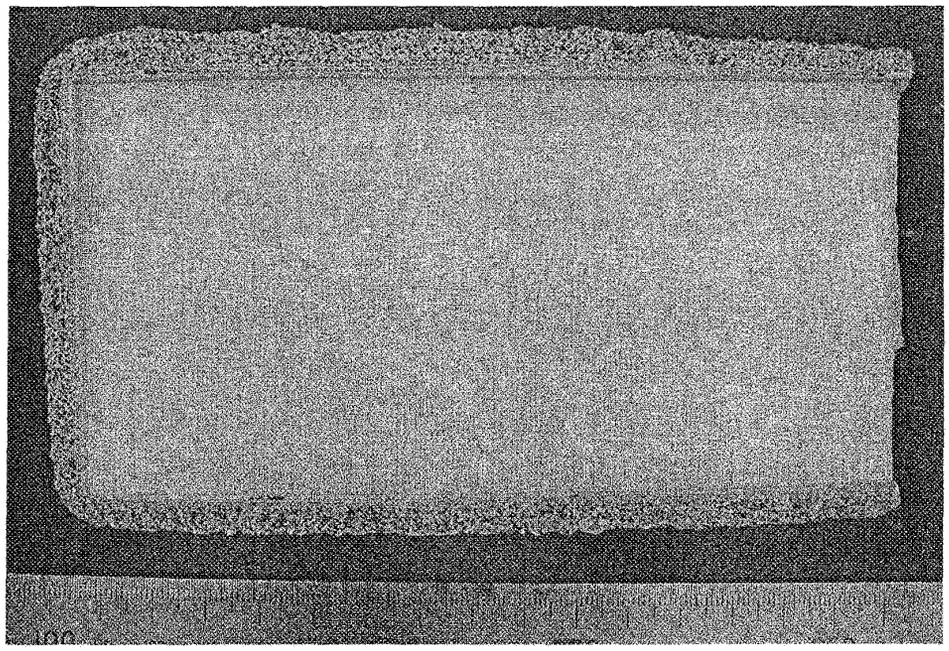

FILLER/BINDER=3.0
NO PEELING, UNIFORM SURFACE

[FIG.22]

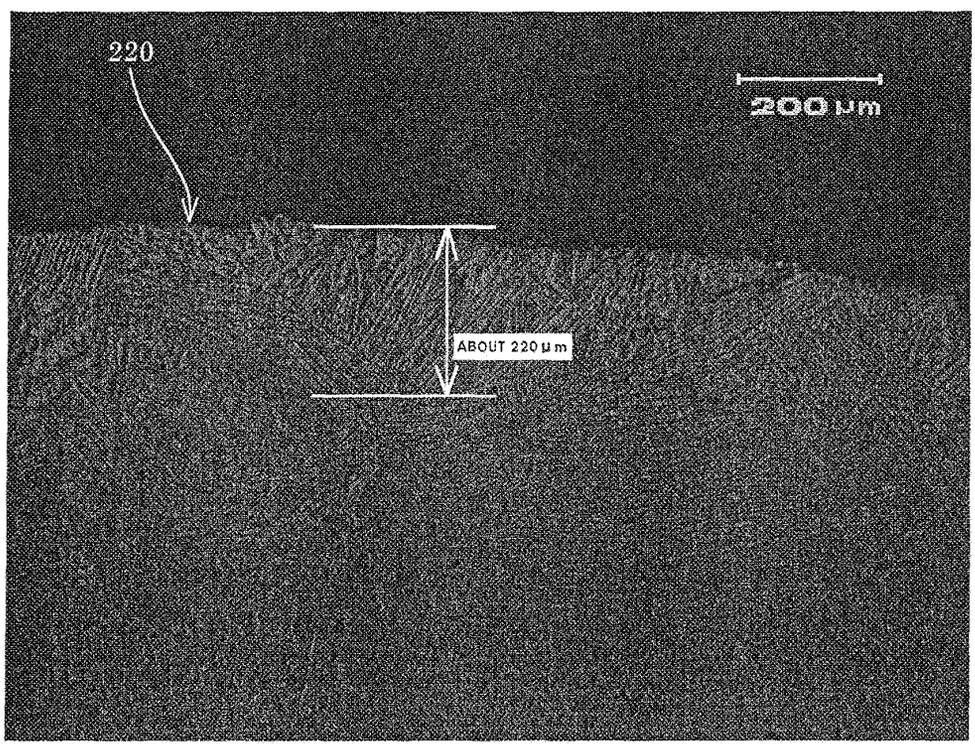

[FIG.23]

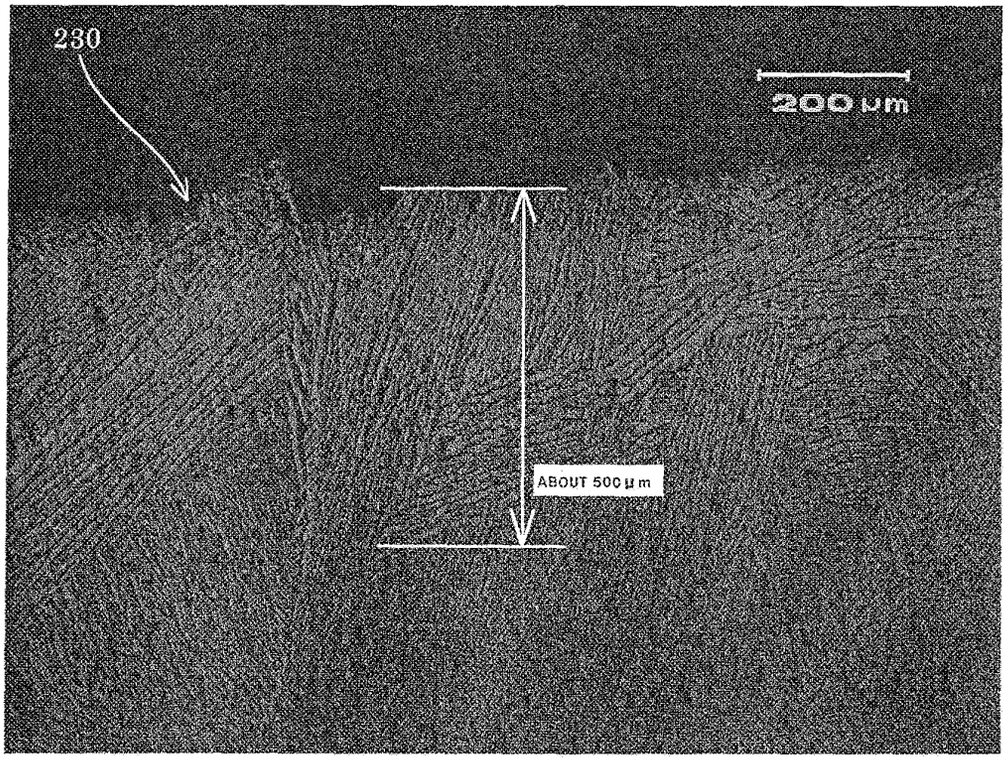


[FIG.24]

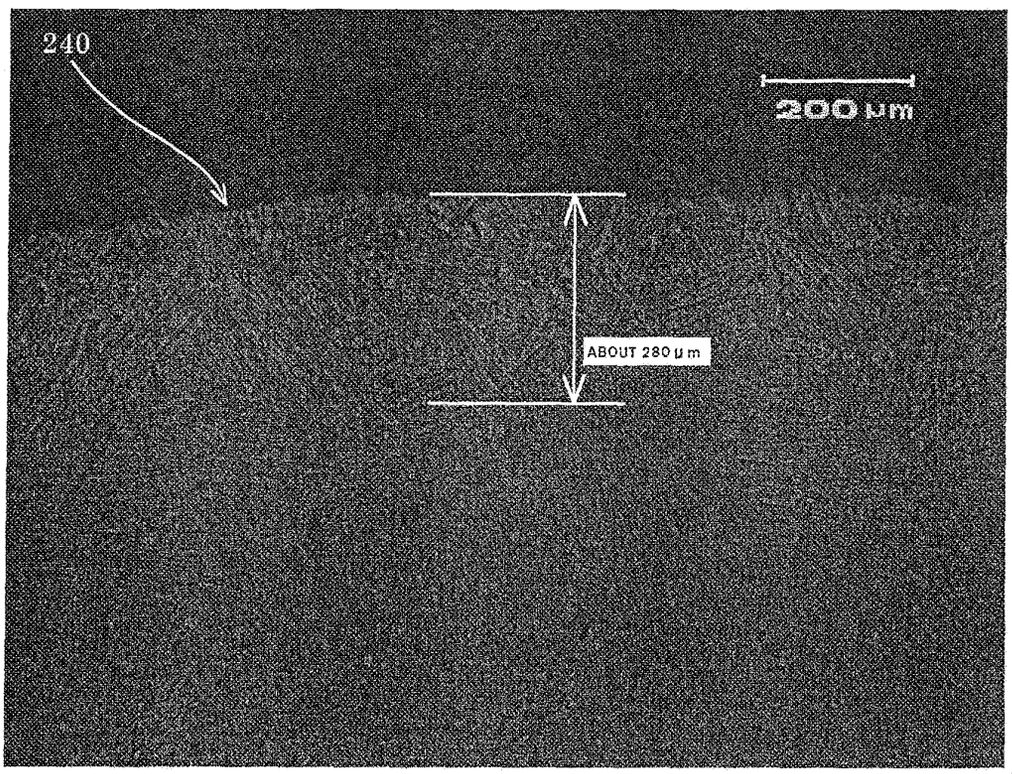

[FIG.25]

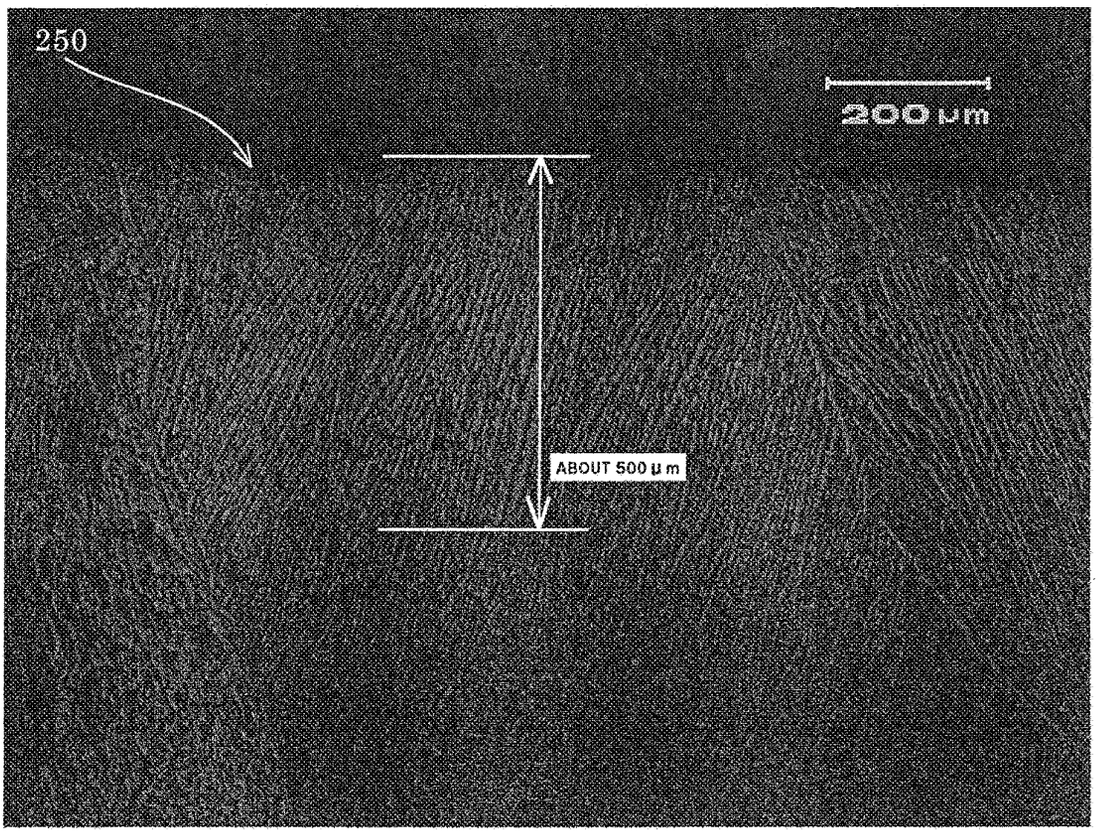

**INTERNATIONAL SEARCH REPORT**

International application No.
PCT/JP2006/317771

A. CLASSIFICATION OF SUBJECT MATTER
*B22C9/04*(2006.01)i, *B22C1/00*(2006.01)i, *B22C1/08*(2006.01)i, *B22D21/02*(2006.01)i

According to International Patent Classification (IPC) or to both national classification and IPC

B. FIELDS SEARCHED

Minimum documentation searched (classification system followed by classification symbols)
B22C1/00-25/00, B22D21/02

Documentation searched other than minimum documentation to the extent that such documents are included in the fields searched

| | | | |
|---|---|---|---|
| Jitsuyo Shinan Koho | 1922-1996 | Jitsuyo Shinan Toroku Koho | 1996-2006 |
| Kokai Jitsuyo Shinan Koho | 1971-2006 | Toroku Jitsuyo Shinan Koho | 1994-2006 |

Electronic data base consulted during the international search (name of data base and, where practicable, search terms used)

C. DOCUMENTS CONSIDERED TO BE RELEVANT

| Category* | Citation of document, with indication, where appropriate, of the relevant passages | Relevant to claim No. |
|---|---|---|
| A | JP 5-212489 A (Kawasaki Steel Corp., 24 August, 1993 (24.08.93), (Family: none) | 1-11 |
| A | JP 5-161938 A (Kawasaki Steel Corp.), 29 June, 1993 (29.06.93), & US 5492957 A | 1-11 |

☐ Further documents are listed in the continuation of Box C. ☐ See patent family annex.

* Special categories of cited documents:
"A" document defining the general state of the art which is not considered to be of particular relevance
"E" earlier application or patent but published on or after the international filing date
"L" document which may throw doubts on priority claim(s) or which is cited to establish the publication date of another citation or other special reason (as specified)
"O" document referring to an oral disclosure, use, exhibition or other means
"P" document published prior to the international filing date but later than the priority date claimed
"T" later document published after the international filing date or priority date and not in conflict with the application but cited to understand the principle or theory underlying the invention
"X" document of particular relevance; the claimed invention cannot be considered novel or cannot be considered to involve an inventive step when the document is taken alone
"Y" document of particular relevance; the claimed invention cannot be considered to involve an inventive step when the document is combined with one or more other such documents, such combination being obvious to a person skilled in the art
"&" document member of the same patent family

| | |
|---|---|
| Date of the actual completion of the international search<br>04 December, 2006 (04.12.06) | Date of mailing of the international search report<br>12 December, 2006 (12.12.06) |
| Name and mailing address of the ISA/<br>Japanese Patent Office<br><br>Facsimile No. | Authorized officer<br><br>Telephone No. |

Form PCT/ISA/210 (second sheet) (April 2005)

## REFERENCES CITED IN THE DESCRIPTION

*This list of references cited by the applicant is for the reader's convenience only. It does not form part of the European patent document. Even though great care has been taken in compiling the references, errors or omissions cannot be excluded and the EPO disclaims all liability in this regard.*

### Patent documents cited in the description


- JP H5123820 B **[0005]**
- JP 2003225738 A **[0005]**
- JP H5277624 B **[0005]**
- JP H6292940 B **[0005]**