July 13, 1943. J. J. ALLES 2,324,051

TRAFFIC SIGNAL CONTROL APPARATUS

Filed June 2, 1942 6 Sheets-Sheet 1

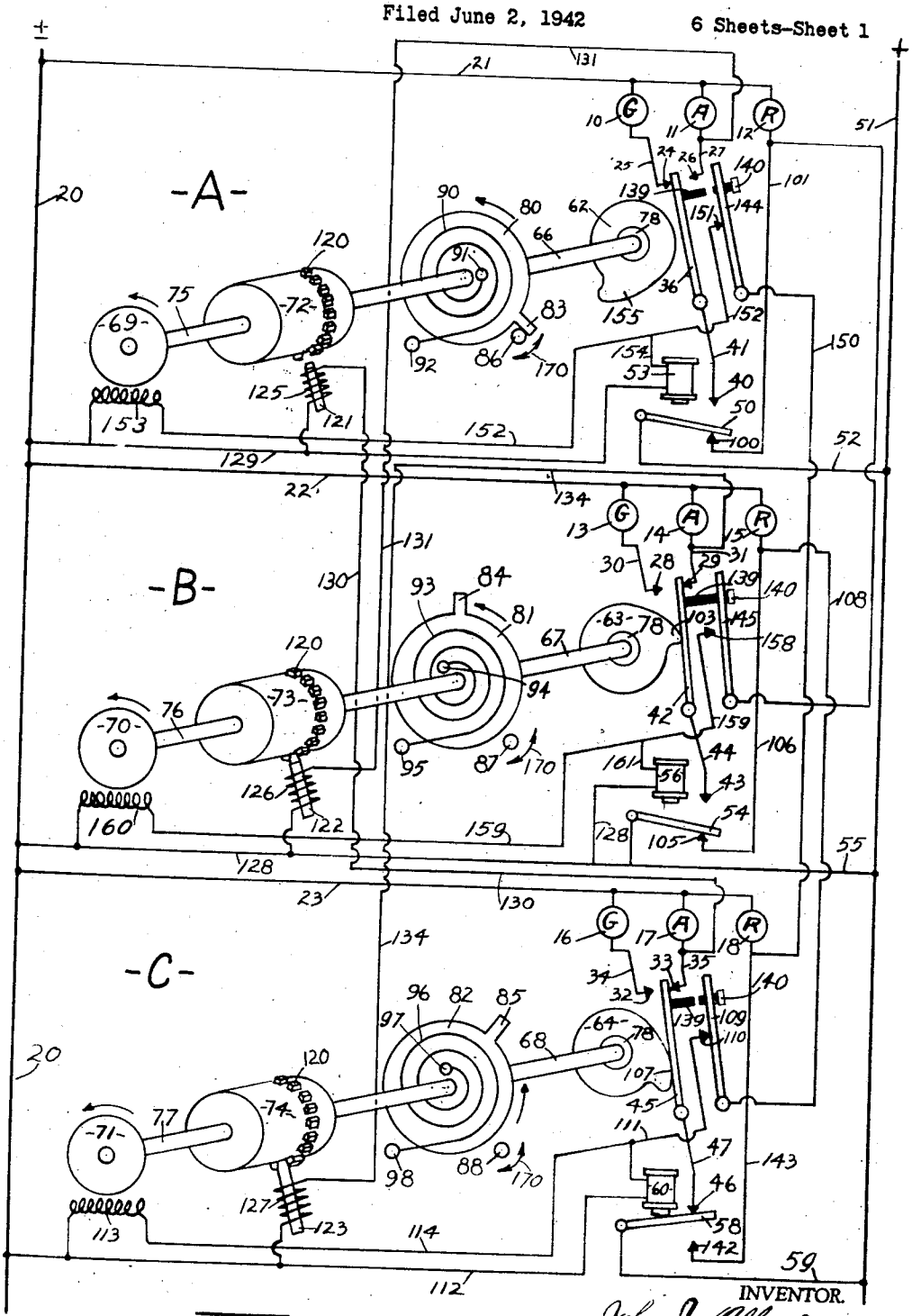

Fig-1-

July 13, 1943. J. J. ALLES 2,324,051

TRAFFIC SIGNAL CONTROL APPARATUS

Filed June 2, 1942 6 Sheets-Sheet 2

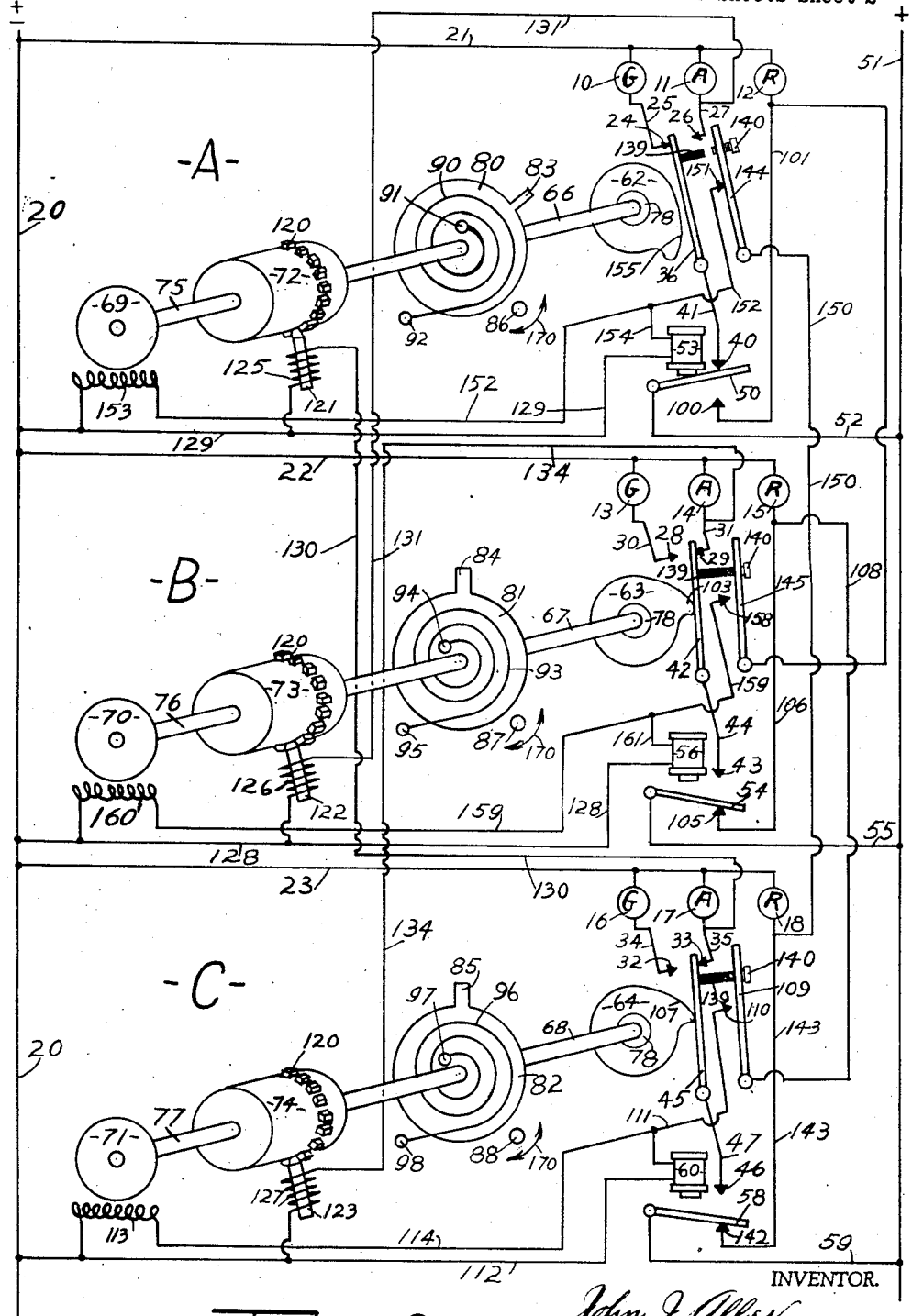

Fig-2-

July 13, 1943. J. J. ALLES 2,324,051

TRAFFIC SIGNAL CONTROL APPARATUS

Filed June 2, 1942 6 Sheets-Sheet 3

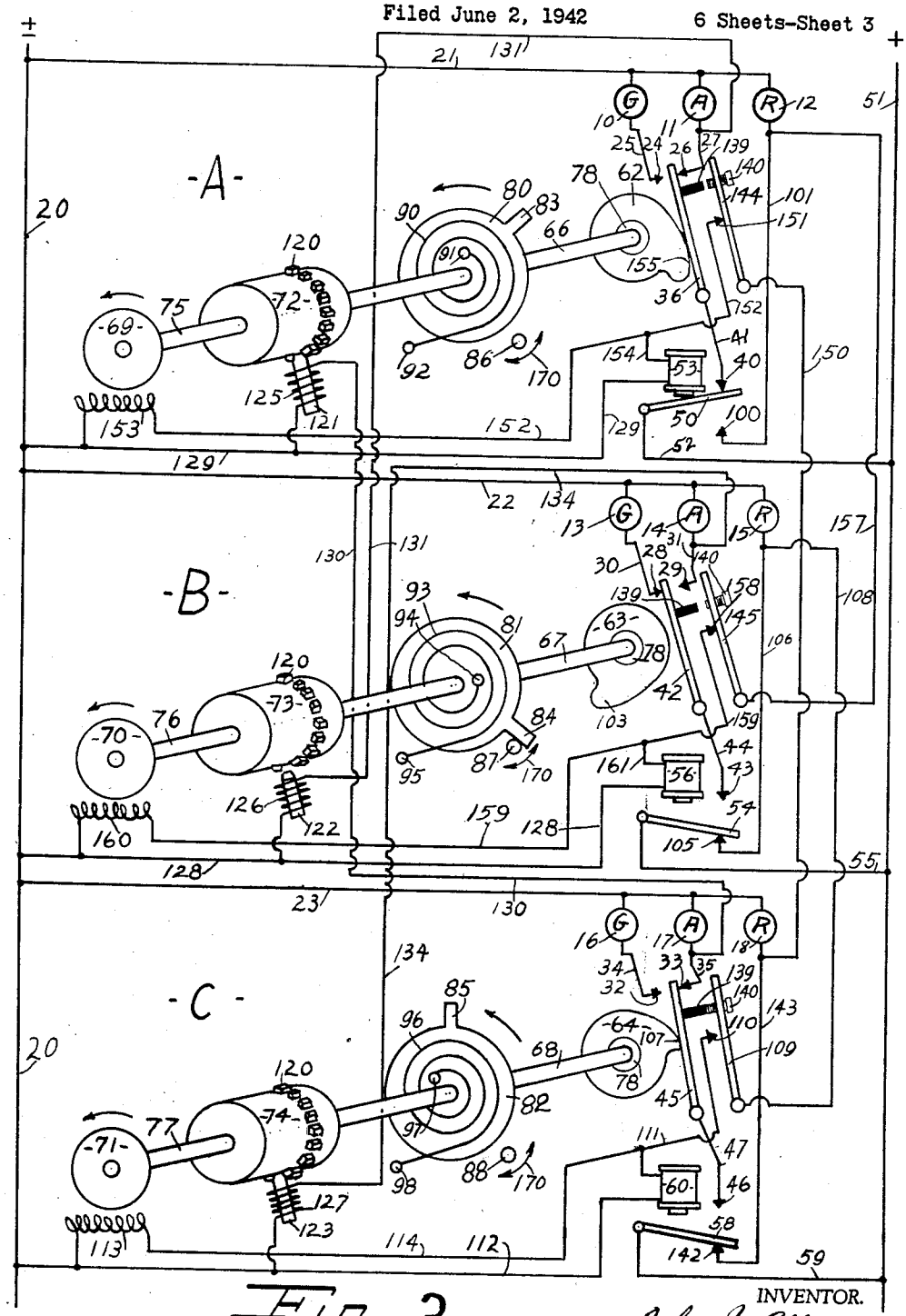

Fig -3-

INVENTOR.
John J. Alles.
BY Bodell & Thompson.
ATTORNEYS.

July 13, 1943. J. J. ALLES 2,324,051

TRAFFIC SIGNAL CONTROL APPARATUS

Filed June 2, 1942 6 Sheets-Sheet 4

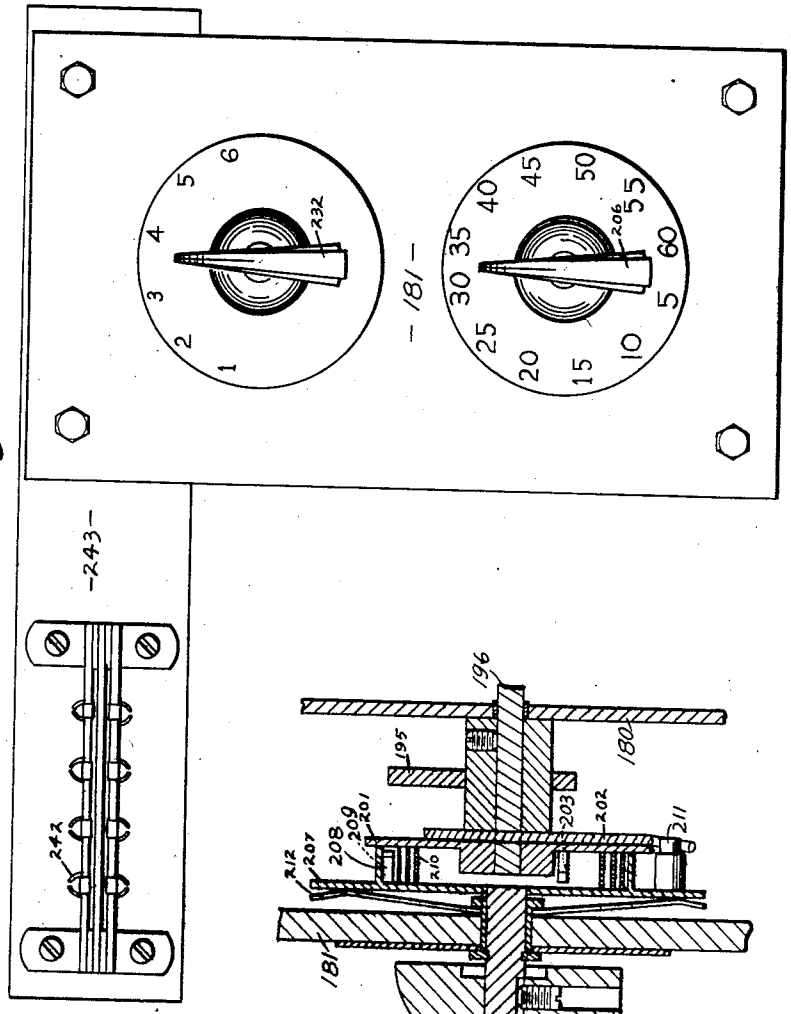

Fig. 4

Fig. 9

INVENTOR.
John J. Alles.
BY Bodell & Thompson
Attys.

July 13, 1943. J. J. ALLES 2,324,051

TRAFFIC SIGNAL CONTROL APPARATUS

Filed June 2, 1942 6 Sheets-Sheet 5

Fig. 5

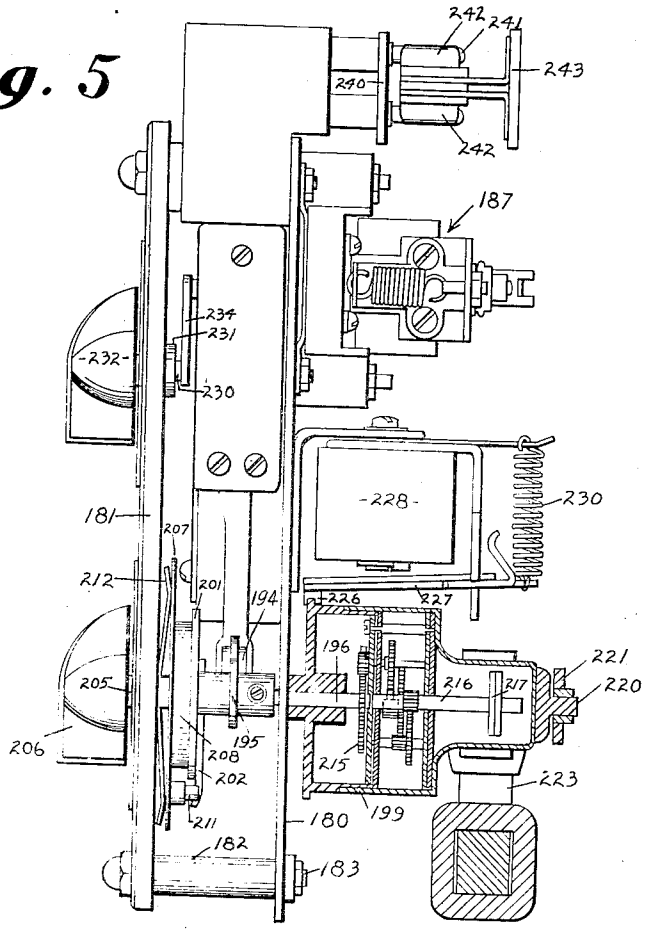

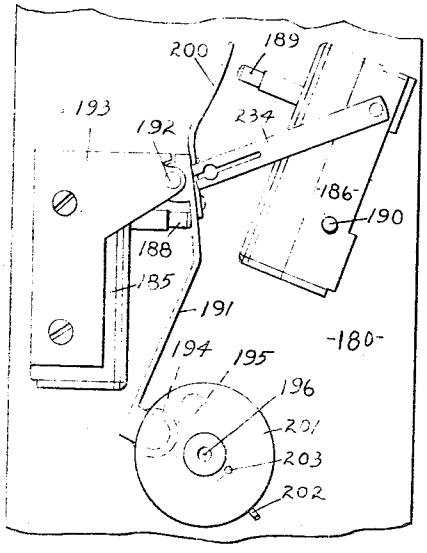

Fig. 8

INVENTOR.
BY John J. Alles
Bodell & Thompson
Attys

July 13, 1943. J. J. ALLES 2,324,051

TRAFFIC SIGNAL CONTROL APPARATUS

Filed June 2, 1942 6 Sheets-Sheet 6

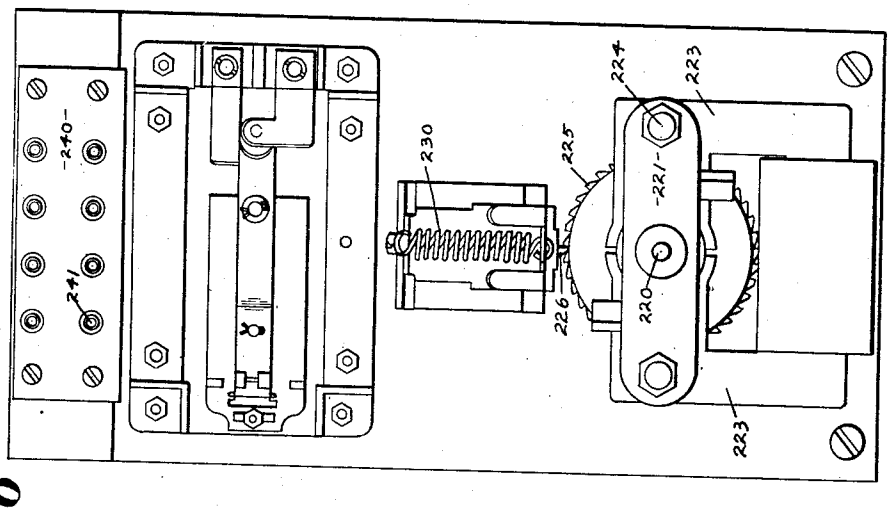

Fig. 6

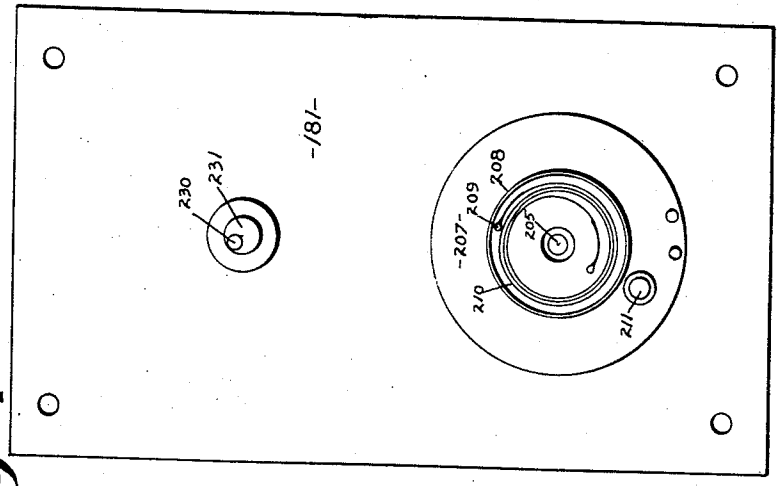

Fig. 7

INVENTOR.

By John J. Alles

Bakewell & Thompson

Attys.

Patented July 13, 1943

2,324,051

UNITED STATES PATENT OFFICE

2,324,051

TRAFFIC SIGNAL CONTROL APPARATUS

John J. Alles, Wilkes Barre, Pa.

Application June 2, 1942, Serial No. 445,457

14 Claims. (Cl. 177—337)

This invention relates to control apparatus for successively energizing a plurality of working circuits in a predetermined timed sequence.

The invention is herein illustrated and described in connection with a street traffic signaling system wherein the green, amber and red signals are operated through repeated cycles.

When traffic signals first went into commercial use, they were operated by relatively simple controls or timers in the nature of timers then in use for controlling signs. As the use of traffic signals grew, it became apparent that the sign flasher was not suitable for use as a traffic signal timer. It was particularly not adapted to provide the many adjustments and variations that were eventually required in more complicated traffic signaling systems. Accordingly, over a period of some twenty years many special timers, both mechanically and vacuum tube operated, were designed for traffic signal use and such timers progressively became more complicated and expensive to manufacture, this being particularly true when it was attempted to efficiently control traffic at intersections other than the common two street intersection for example, three, four, five and six street intersections. The proper movement of traffic at these multiple street intersections is rather complex and if suitable adjustments are provided for in the timer the mechanism becomes complicated and such timers are usually especially built for a particular intersection, with the result that they are relatively expensive and are of no value except for use on such an intersection.

The chief object of my invention is a timer or control apparatus embodying a number of individual control units. For example, an individual control unit for each street at the intersection, and the apparatus being so constructed and arranged that these control units may be added or taken away at will, whereby a timer initially installed to handle a two street intersection may, by simply adding another control unit, take care of a three street intersection.

The invention has as a further object a control apparatus of the type referred to wherein the individual control units are all of like construction and the construction of these units being extremely simple, with the result that they can be manufactured at a low cost, are particularly durable and efficient in operation and, inasmuch as they are jack mounted, can be instantly replaced. This feature is of importance to the municipality inasmuch as it makes it possible for the city to have a number of individual control units in stock and, in the event there comes a time when the individual control unit of a timer needs repairs, the unit can be removed and a workable one inserted in its place while the defective unit may be repaired at the convenience of the electrical department. It is also important because it permits the cities to readily convert timers to obtain any number of traffic movements desired at any particular location.

The invention has as a further object a construction whereby each individual control unit embodies means permitting the adjustment of certain periods of the traffic cycles on its street independently of the other periods. For example, if it is desired to lengthen the amber or caution period on one street, the adjustment is conveniently made without taking any time from either the red or the green period on that street.

Each of the control units operates through a cycle, at the end of which the unit comes to rest with one of the work circuits closed. Each unit is returned to its initial position and is again started upon its cycle by action of one of the other control units in the controller. In other words, the arrangement is such that the operation of each control unit is initiated by one of the other control units used in the controller.

The invention consists in the novel features and in the combinations and constructions hereinafter set forth and claimed.

In describing this invention, reference is had to the accompanying drawings in which like characters designate corresponding parts in all the views.

Figure 1 is a schematic wiring diagram illustrating the arrangement and operation of the control apparatus which is illustrated with three control units for three traffic lanes or streets, the units being positioned with the red signal displayed on streets A and B, and the amber signal on street C.

Figure 2 is a view, similar to Figure 1, with the apparatus positioned showing the green signal displayed on street A, and the red signal on streets B and C.

Figure 3 is a view, similar to Figures 1 and 2, illustrating the display of the amber on street A, and the red on streets B and C.

Figure 4 is a front elevational view of a cam unit embodying my invention.

Figure 5 is a side elevational view of one of the control units with the motor and reduction gearing shown in section.

Figure 6 is a rear elevational view of a control unit.

Figure 7 is an elevational view of the inner side of the face plate of a control unit.

Figure 8 is an elevational view of the control switches and operating mechanism.

Figure 9 is a fragmentary sectional view of the cam shaft and adjusting mechanism.

In the drawings, the controller is illustrated as having three individual cam units arranged to operate traffic signals at an intersection having three traffic lanes or streets. The arrange-

ments and circuits of the control apparatus can be more easily understood by making reference first to the diagrams shown in Figures 1, 2 and 3. These cam units are designated A, B and C, it being understood that the signals associated with each cam unit control traffic on streets or lanes A, B and C respectively. The green, amber and red signals, associated with unit A, are indicated at 10, 11 and 12; those associated with unit B 13, 14 and 15, respectively, and those associated with unit C 16, 17 and 18, respectively. While in the diagrams a green, amber and red signal is shown for each traffic lamp, it will be further understood that in the conventional installation there will be a second set of signals facing traffic moving in the opposite direction on each street. The green and amber lights for each street are controlled by a switch or switches actuated directly by the cam of the associated cam unit. The red signals on each of the streets are controlled by a relay controlled by the cam unit with which the red signal is associated, the energizing circuit of the relay being connected to the red signal circuit of one of the other units. This arrangement is such that the individual cam units operate successively in a cycle to display the traffic signals successively on the respective streets at the intersection.

The signal lights 10, 11 and 12 are connected to the common side 20 of the supply through a wire 21. The signals 13, 14 and 15 are connected to the side 20 through wire 22, and the signals 16, 17 and 18 through wire 23. The green signal 10 is connected to a contact 24 through wire 25, and the amber light 11 to a contact 26 through wire 27. In like manner, the green and amber signals 13, 14 are connected to contacts 28, 29 respectively through wires 30, 31, and the green and amber lights 16, 17 to contacts 32, 33, through wires 34, 35.

A movable contact 36 is arranged to be moved into and out of engagement with the contacts 24, 26, and is connected to a stationary contact 40 through wire 41.

The contacts 28, 29 are controlled by movable contact 42 connected to stationary contact 43 through wire 44, and the contacts 32, 33 are energized by movable contact 45 connected to contact 46 through wire 47.

Contact 40 is energized by the armature or movable contact 50 connected to the hot side 51 of the supply through wire 52. The armature 50 is under the control of a relay coil 53. The contact 43 of unit B is energized by armature 54 connected to wire 51 through wire 55, the armature being under the control of relay coil 56, and the contact 46 of unit C is energized by armature 58 connected to wire 51 through wire 59, this armature being controlled by relay 60.

It will be observed that each of the cam units A, B and C consist of identical parts in identical arrangement. However, separate numbers have been assigned to the respective parts of each unit in order that the cyclic operation hereinafter set forth may be more readily understood.

The contacts 36, 42, 45 are actuated into and out of engagement with their associated stationary contacts by cams 62, 63, 64. These cams are mounted upon and rotate with shafts 66, 67 and 68 respectively, these shafts being rotated by motors 69, 70, 71 through reduction gearing arranged in the respective gear housings 72, 73, 74. The motors 69, 70, 71 are connected to the gearing in housings 72, 73 and 74 through their shafts 75, 76 and 77 respectively. The gear housings are rotatably mounted upon the shafts 66, 67, 68; 75, 76, 77. The cams 62, 63 and 64 may be insulated from their shafts 66, 67, 68, by being mounted upon disks 78 of insulating material.

A disk 80 is secured to the shaft 66 and similar disks 81, 82 are secured to the shafts 67, 68. The disks 80, 81, 82 are provided with radially extending projections 83, 84 and 85 cooperable with stops 86, 87 and 88 when the associated cams 62, 63 and 64 are in initial position, as indicated in unit A, Figure 1.

A helical torsion spring 90 is secured at its inner end to disk 80 as at 91, and at its opposite end to a fixed pin 92. The arrangement is such that when the shaft 66 is rotated to move the cam 62 through its arc of rotation, the spring 90 is wound up. That is, the rotation of the shaft 66 is against the tension of the spring and accordingly, the spring 90 yieldingly urges the shaft 66 and the associated cam 62 back to its initial position. Similarly, a spring 93 is associated with disk 81 and a spring 96 with disk 82.

Referring to Figure 1 of the drawings, the cam 62 and disk 80 in unit A are in their initial or starting position with movable contact 36 in engagement with contact 24. However, the green signal 10 is not illuminated due to the fact that relay 53 is deenergized and its armature 50 is out of engagement with contact 40 and is dropped into engagement with stationary contact 100 which is connected to the red lamp 12 through wire 101. Accordingly, the red light is energized on street A.

Cam 63 and disk 81 of unit B have traveled through their arc of movement and have come to rest with the highest part of the lobe 103 of the cam in engagement with the movable contact 42 and has thus moved contact 42 in engagement with contact 29. However, the amber light 14 is not illuminated due to the fact that relay 56 is also deenergized thus breaking the feed circuit to contact 43. The red light 15 is however energized through wire 55, armature 54, contact 105 and wire 106.

Cam 64 and disk 82 in unit C have traveled through a portion of their arc of movement and are so positioned that the low part of the cam lobe 107 is in engagement with the contact 45 and has moved the same into engagement with contact 33. Inasmuch as the relay in unit C is now energized, a hot feed is provided to the amber light through wire 59, armature 58, contact 46, wire 47, contacts 45, 33, and wire 35.

Relay 60 in unit C is energized through wire 108 connected to wire 106 energizing the red signal 15 in unit B through a movable contact 109, stationary contact 110, wire 111, relay 60, wire 112, to the common side 20. Wire 111 is also connected to coil 113 of motor 71 through wire 114, the opposite side of the coil being connected to wire 112 to the common return 20. Accordingly, the motor 71 is energized and is operated effecting rotation of cam 64 and disk 82.

From the above description, in connection with Figure 1 of the drawings, it is apparent that motors 69, 70 of units A and B are deenergized and the red lights 12, 15 are displayed. Motor 71 of unit C is energized, cam lobe 107 having just shifted the movable contact 45 from contact 32 to contact 33 effecting a shift from the green signal 16 to the amber signal 17.

The gear housings 72, 73, 74 are each provided with radially extending projections 120, and the respective units are provided with detents 121,

122 and 123 normally engaging the projections 120 and being withdrawn from engagement therewith by the respective solenoid coils 125, 126 and 127. One side of the coil 127 is connected to the wire 112. Similarly, the coil 126 is connected to the wire 128 and the coil 125 to wire 129. The opposite side of coil 125 is connected through wire 130 to the feed wire 35 for the amber lamp 17 on street C. The other side of the coil 126 is connected through wire 131 to the feed wire 27 of the amber lamp 11 for street A, and the opposite side of coil 127 is connected through wire 134 to the feed wire 31 for amber lamp 14 on street B.

Accordingly, inasmuch as amber lamp 17 on street C is illustrated as energized in Figure 1 of the drawings, the coil 125 is likewise energized moving the detent 121 out of engagement with the projections 120 on gear housing 72. The reduction gearing in the housings 72, 73, 74 is of the planetary type and functions when the housings are held against rotation to effect rotation of the cam shafts by the respective motors. The arrangement of the motor shafts, cam shafts, housings and gearing within the housings, is illustrated more specifically in Figure 5. Due to the relatively great reduction in the gearing arranged in each of the housings 72, 73, 74, the housings are in practical effect, insofar as retrograde movement is concerned, coupled to the respective shafts 66, 67, 68. Accordingly, when the shafts 66, 67, 68 have been rotated through their cycle or arc of movement by their respective motors against the tension of the springs 90, 93, 96, and thereupon the detents 121, 122 and 123 are withdrawn from the projections 120, the housings 72, 73, 74 and their associated shafts 66, 67, 68 are rotated in retrograde movement until the projections 83, 84, 85 of the respective disks 80, 81, 82 engage their respective stops 86, 87, 88. Accordingly, when the amber lamp 17 on street C was illuminated, cam unit A was returned to its initial position as indicated in the drawings. And likewise, because of the relatively great reduction in the gearing arranged in the respective housings, the shafts 66, 67, 68 are prevented from returning to their initial position until the housings have been released by their detents.

In Figure 2 of the drawings, cam 64 has advanced to the end of its movement with the highest portion of the lobe 107 in engagement with the movable contact 45. The contacts 36, 42, 45 are so arranged, or the stationary contacts 26, 29, 33 are so arranged as to permit a slight overmovement. That is, when the low portion of the lobe 107 on cam 64 engages the contact 45, it moves the same into engagement with contact 33, and then effects further movement of contact 45, causing the insulating member 139 to engage adjusting screw 140, moving contact 109 out of engagement with contact 110, thereby breaking the feed circuit to relay 60 and motor coil 113. Accordingly, cam unit C stops in this position, retrograde movement by spring 96 being prevented because of the fact that detent 123 is in engagement with the projections 120 on gear housing 74.

Deenergization of relay 60 has effected display of the red signal 18 on street C through movable contact 58, stationary contact 142, wire 143. Units A and B are provided with movable contacts 144, 145 respectively, which contacts are comparable to contact 109 of unit C. Each of the movable contacts 144, 145 are also provided with adjusting screws 140. It will be apparent that when contacts 109, 144, 145 are moved out of engagement with their respective stationary contacts, the associated amber light is extinguished. Accordingly, the time within which the movable contacts are actuated determines the duration of the amber and accordingly the duration of the amber is adjustable by adjusting the screws 140.

As previously explained, when the amber lamp 17 on street C was energized, solenoid coil 125 of unit A was also energized retracting the detent 121 from engagement with the housing 72, thus permitting cam 62 to return to its initial position as shown in Figure 1. Subsequently, when the red light 18 of unit C was energized, relay 53 of unit A was energized through wire 150 connecting wire 143 to contact 144 which, at this time, is in engagement with contact 151, the latter being connected by wire 152 to the motor coil 153 of motor 69 and by branch wire 154 to the solenoid 53, the wire 129 serving as a return circuit for relay 53, coil 125 and motor coil 153.

Referring now again to Figure 2, the motor 69 of unit A has rotated cam 62 so that the lobe 155 is about ready to engage contact 36 to move the same out of engagement with contact 24 connected to the green light 10 and move it into engagement with contact 26 connected to the amber lamp 11. When this happens, as illustrated in Figure 3, the coil 126 of unit B will be energized moving the detent 122 out of engagement with housing 73 permitting cam 63 to be returned to its initial position by action of spring 93.

It will be observed that in Figure 1 the red light was displayed on streets A and B, and the amber light was displayed on street C. In Figure 2, because of the display of the amber light on street C in Figure 1, unit A was returned to its initial position and when unit C advanced far enough to deenergize the relay 60 and energize the red signal 18, the red signal on street A was extinguished and the green signal illuminated because of the shifting of the contact 50 upon the energization of relay 53, and when unit A had advanced to the position shown in Figure 3, the green light on street A was extinguished and the amber light 11 illuminated and simultaneously unit C returned to its initial position. Now when the unit A advances to its final position and moves contact 144 out of engagement with contact 151, relay 53 will be deenergized permitting contact 50 to move out of engagement with contact 40 thus extinguishing the amber lamp 11 and moving into engagement with contact 100 to energize the red signal 12 through wire 101 and thereupon through wire 157, contacts 145, 158, wire 159. The motor coil 160 of motor 70 will be energized to actuate cam 63 on its cycle and simultaneously the relay 56 will be energized through branch wire 161, in this instance the wire 128 serving as a common return for both relay 56 and motor coil 160.

This operation effects movement of contact 54 out of engagement with contact 105 and into engagement with contact 43. This completes a circuit from the hot side of the line 51 to the green light 13 on street B through wire 44, movable contact 42, contact 28, wire 30, green light 13 and thence to the common side 20 through wire 22.

Unit B continues to operate through its cycle shifting contact 42 out of engagement with contact 28 and into engagement with contact 29, thus extinguishing the green light 13 and energizing the amber light 14 and simultaneously energizing coil 127 of unit C, causing the detent

123 to move out of engagement with the housing 74 and permitting cam 64 to return to its initial position and at the end of its travel, as illustrated in Figure 1, cam 63 has moved contact 145 out of engagement with contact 158 breaking the circuit to relay 56 and effecting display of the red signal 15 as previously described.

It will be apparent that these individual control units are operable through a cycle to successively display the green, amber and red signals on their respective streets, and are also operable to shift or return one of the other units to its initial position, and upon display of the red light to initiate another one of said units on its cycle, whereby all of these units are electrically interconnected and can not get out of step with each other.

The stop pins 86, 87 and 88 are adjustable circumferentially of the disks 80, 81 and 82 in both directions, as indicated by arrows 170 on the schematic diagrams Figures 1, 2 and 3. This results in changing the initial position of the respective cams. When any of the pins are moved in a clockwise direction, the lobe on the associated cam must travel a greater distance before engaging the contacts 36, 42, 45, and thus a greater time interval is provided for the green light.

The arrangement of the contacts for the green and amber signals such as 25, 26 in unit A, the movable contact as 36, and the associated cams 62, 63, 64, is such that the amber contacts 26, 29, 33, are engaged by the contacts 36, 42, 45, immediately upon disengagement with the green contacts 24, 28 and 32.

The adjustment for the duration of the amber signal is accomplished by the adjusting screws 140 engaging the insulated spacers 139, as previously explained.

A structural embodiment of the invention is illustrated in Figures 4 to 7 inclusive. Each cam unit consists of a supporting plate 180, to the front side of which is secured a face plate 181 as by spacers 182, screws 183. Switches 185, 186 are mounted upon the front side of the supporting plate 180. The switch 185 is of the single pole, double throw switch and serves to control the green and amber signals associated with each unit. The switch 186 is of the single pole, single throw type and serves to control the relay 187. The switch 185 is provided with an actuating stem 188, and the switch 186 with an actuating stem 189. The contacts of these switches are actuated by a slight axial movement of the stems 188, 189, the switch 185 being comparable to contacts 25, 26, 36 of unit A; contacts 28, 29, 42 of unit B, and contacts 33, 32, 45 of unit C, as illustrated in the diagrams Figures 1, 2 and 3. Similarly the switch 186 serves the function of contacts 144, 151, 145, 158, and 109, 110 of units A, B and C, respectively, as shown in the diagrams. The specific structure of these switches is illustrated in Patent No. 1,960,020. The switch 185 is fixedly secured to the plate 180, and the switch 186 is pivotally mounted as at 190. The stem of switch 185 is operated by lever 191 pivoted at 192 to a bracket 193 secured to the switch 185. The lower end of the lever 191 is provided with a roller 194 engaged by a cam 195 secured to a cam shaft 196 journalled in the plate 180 and extending into the gear housing 199.

The lever 191 is provided with an upwardly extending finger 200 which is movable into and out of engagement with stem 189 of switch 186 to effect actuation thereof. The cam 195 has associated with it a disk 201 provided with a radially extending pin 202 and with an axially extending pin 203. The outer end of the cam shaft 196 terminates at the disk 201. A stub shaft 205 is journalled in the face plate 181 and provided at its outer end with an adjusting knob 206 and having secured to its inner end a disk 207 having an annular flange 208 facing the disk 201. The disk 207 is provided with a pin 209 arranged within and adjacent to the flange 208. A torsion spring 210 is arranged within the flange 208 having its outer end secured to the pin 209 and its inner end secured to the pin 203 on disk 201. The disk 207 is also provided with a pin 211 arranged to be engaged by the radially extending pin 202. The disk 207 is rotatably adjustable by the knob 206 and is frictionally retained in adjusted position by a washer spring 212 interposed between the disk and the inner side of the face plate 181.

The inner end of the cam shaft 196 is provided with a gear 215 arranged to mesh with the reduction gearing arranged in the housing 199 and which is driven by the motor shaft 216 on which the rotor 217 is mounted also within the housing 199. The housing 199 is rotatably journalled upon the cam shaft 196 and is provided at its rear end with a stub shaft 220 journalled in a supporting bracket 221 secured at its ends to the field poles 223 of the motor as by studs 224 which, in turn, are secured at their opposite ends to the supporting plate 180.

In regard to the structure just specifically described, the motor shaft 216 corresponds to the shafts 75, 76, 77 in Figures 1 to 3, and the shaft 196 corresponds to the respective cam shafts 66, 67, 68, and the housing 199 corresponds to the respective housings 72, 73, 74. The housing 199 is formed at its periphery with a plurality of teeth 225 corresponding to the projections 120 in the diagram, and these teeth are engaged by a detent 226 carried on armature 227 of a relay 228, the armature and relay corresponding to the detents and solenoids 121, 125; 122, 126; 123, 127 in the diagrams. The detent 226 is yieldingly urged into engagement with the ratchet teeth 225 by spring 230.

With this arrangement the cam is located in its initial position by the pin 202 contacting the stop pin 211 carried on disk 207. When the motor 223 is energized, the cam shaft 196 is rotated by means of the reduction gearing in housing 199 whereupon the cam engages roller 194 causing actuation of stem 188 of switch 185 to shift the green signal associated with this unit to amber. Upon further rotation of the cam 195 by the motor, the tail piece 200 actuates stem 189 of switch 186 breaking the circuit to relay 187 and to the motor 223 whereupon rotation of cam 195 and shaft 196 ceases and the circuit to the red light under the control of this unit is completed through the contacts of relay 187 and at the same time the circuit to the associated amber signal is opened. The relay 187 corresponds to the relays 53, 56 and 60 in the diagrams.

During the rotation of the cam 195 and disk 201 associated therewith, the torsion spring 210 has been wound up and when relay 228 is energized by a succeeding cam unit causing detent 226 to move out of engagement with teeth 225, the housing 199 and the cam shaft 196 are rotated retrograde until the pin 202 engages the stop 211 whereupon the unit is again positioned to commence another cycle when the motor 223

becomes energized by the next preceding cam unit.

It will be observed that the duration of the green signal is adjusted by rotating the knob 206 effecting rotation of disk 207 and accordingly the stop pin 211 carried thereby, thus adjusting the initial position of the cam shaft in the same manner as explained in regard to the schematic diagrams.

As previously explained, the switch 186 is pivotally mounted at 190 to the supporting plate 180. This switch is connected to a pin 230 eccentrically mounted on the stud shaft 231 journalled in the face plate 181 and provided at its outer end with an adjusting knob 232. The connection to the pin 230 is by means of a link 234 pivotally connected at one end to the switch 186 and at its opposite end to the eccentric pin 230. The pivotal mounting of switch 186 and/or the connections with link 234 are such that the switch is frictionally held in adjusted position. It will be apparent that upon rotation of the adjusting knob 232, the actuating stem 189 of the switch 186 is moved toward and from the operating tail piece 200, whereupon the time interval of the actuation of this switch after the actuation of the contacts of switch 185 may be varied and results in controlling the duration of the amber signal. It will also be apparent that any adjustment of the disk 201 effecting adjustment of the duration of the green signal is entirely independent of any adjustment of switch 186 controlling the duration of the amber period and vice-versa, the adjustment of the one not adding to nor subtracting from the period of the other.

I call further attention to the compact and efficient arrangement of the cam units which may obviously be still further reduced in size and cost by employing switching mechanism other than that illustrated in Figures 4 to 9, by way of switches 185, 186. These units are not only compact and economical to build, but are particularly well adapted to be jack mounted upon the wall of a control cabinet or other suitable support. To this end, a plate 240 is secured to the upper end of the support plate 180 and on which are mounted a plurality of prongs 241 extending rearwardly, these prongs being adapted to be positioned in receptacles 242 arranged upon a suitable support 243. All connections extending from one cam unit to another are connected to the prongs 241 as, for example referring to unit A, Figure 1, the line conductors 20, 51, signal circuit conductors 25, 27, 108, and conductors 130, 131, 150, extending to the solenoid of the detent 121 from the amber signal circuit and from the red signal circuit respectively. Accordingly, in the event any cam unit should become out of order, it is only necessary in removing that unit to pull it out of the jack mounting 242, whereupon a replacement unit can be immediately mounted in place thereof. This is an important feature in that it avoids the necessity of the person in charge of the traffic signaling system in making repairs or substantial adjustments at the intersection, and permits him to take the defective unit back to the repair shop where it can be more conveniently and quickly repaired.

While I have illustrated the detent operating coils 122, 123, 125, as being connected in parallel with the amber signal circuit of the preceding unit, it will be apparent that these detent coils may be connected in parallel with the green signal circuit of the preceding cam unit. In either event, the unit is returned to its initial position prior to the time it commences its active cycle.

What I claim is:

1. A traffic signal control apparatus for controlling the green, amber and red signals on each street of an intersection having two or more streets comprising an individual control unit for each street, each control unit including timer operated means operable when energized to move from initial position through a cycle to successively display the green, amber and red signals on its street, means cooperable, upon the display of one of said signals, to return another one of said units to its initial position, and means operable, upon the display of the red signal to energize the timer operated means of said other control unit.

2. A traffic signal control apparatus for controlling the green, amber and red signals on each street of an intersection having two or more streets comprising an individual control unit for each street, each control unit including timer operated means operable when energized to move from initial position through a cycle to successively display the green, amber and red signals on its street, means cooperable, upon the display of one of said signals, to return another one of said units to its initial position, and means operable, upon the display of the red signal to energize said other control unit, and means operable to adjust the duration of the display of the green signal by each unit independently of the duration of the display of the amber or red signal.

3. A traffic signal control apparatus for controlling the green, amber and red signals on each street of an intersection having two or more streets comprising an individual control unit for each street, each control unit including timer operated means operable when energized to move from initial position through a cycle to successively display the green, amber and red signals on its street, means cooperable, upon the display of the amber signal, to return another one of said units to its initial position, and means operable, upon the display of the red signal to energize said other control unit, and means operable to adjust the duration of the amber signal independently of the duration of the green or red signal.

4. A traffic signal control apparatus for controlling the green, amber and red signals on each street of an intersection having two or more streets comprising an individual control unit for the signals on each street, each unit including a plurality of switches for controlling the signal circuits, a cam shaft, cam means mounted on the shaft for actuating said switches, motion transmitting means connecting said motor and cam shaft including a freely rotatable housing, gearing arranged in said housing, said gearing being operable by the motor while said housing is restrained against rotation to effect rotation of said cam shaft from initial position to actuate said switches through a cycle to successively display the red, amber and green signals to the street under the control of said unit, a detent movable into and out of engagement with said housing and being operable when in engagement with the housing to hold the same against rotation, means yieldingly opposing rotation of said cam shaft by the motor and being operable to effect retrograde movement of said shaft to return the cam means to initial position when said detent is moved out of engagement with said

housing, electro-responsive means operable when energized to move said detent out of engagement with the housing, and said means being energized concurrently with the display of one of the signals under the control of one of said other control units, and switching means operable upon the display of the red signal by said other control unit to energize said motor.

5. A traffic signal control apparatus for controlling the green, amber and red signals on each street of an intersection having two or more streets comprising an individual control unit for the signals on each street, each unit including a plurality of switches for controlling the signal circuits, a cam shaft, cam means mounted on the shaft for actuating said switches, motion transmitting means connecting said motor and cam shaft including a freely rotatable housing, gearing arranged in said housing, said gearing being operable by the motor while said housing is restrained against rotation to effect rotation of said cam shaft from initial position to actuate said switches through a cycle to successively display the red, amber and green signals to the street under the control of said unit, a detent movable into and out of engagement with said housing and being operable when in engagement with the housing to hold the same against rotation, means operable to effect return of the cam means to initial position when said detent is moved out of engagement with said housing, electro-responsive means operable when energized to move said detent out of engagement with the housing, and said means being energized concurrently with the display of the amber signal under the control of one of said other control units, and switching means operable upon the display of the red signal by said other control unit to energize said motor.

6. A traffic signal control apparatus for controlling the green, amber and red signals on each street of an intersection having two or more streets comprising an individual control unit for the signals on each street, each unit including a cam shaft, cam means mounted on the cam shaft, a motor, motion transmitting means connecting said motor and cam shaft including a freely rotatable housing and being operable while said housing is restrained against rotation to effect rotation of said cam shaft by the motor to move the cam means from initial position through a cycle, detent means movable into and out of engagement with said housing and being operable when in engagement with the housing to hold the same against rotation, and means yieldingly opposing rotation of said cam shaft and being operable to effect retrograde movement of said shaft to return the cam means to its initial position when said detent is moved out of engagement with the housing, a pair of contacts connected to the green and amber signal circuits, a movable contact, said movable contact being positioned in engagement with the green signal circuit contact when said cam is in its initial position, and being movable by said cam means upon rotation thereof into engagement with the amber signal circuit contact, a relay operable when energized to furnish power to said first movable contact and when deenergized to furnish power to the red signal, a circuit for energizing said relay and said motor and including said second movable contact, said second movable contact being connected to the red signal circuit of one of the other control units, and electro-responsive means operable to move said detent out of engagement with the housing and being connected in the amber signal circuit of said other control unit.

7. A traffic signal control apparatus for controlling the green, amber and red signals on each street of an intersection having two or more streets comprising an individual control unit for the signals on each street, each unit including a cam shaft, cam means mounted on the cam shaft, a motor, motion transmitting means connecting said motor and cam shaft including a freely rotatable housing and being operable while said housing is restrained against rotation to effect rotation of said cam shaft by the motor to move the cam means from initial position through a cycle, detent means movable into and out of engagement with said housing and being operable when in engagement with the housing to hold the same against rotation, means operable to effect return of the cam means to initial position when said detent is moved out of engagement with said housing, a pair of contacts connected to the green and amber signal circuits, a movable contact, said movable contact being positioned in engagement with the green signal circuit contact when said cam is in its initial position, and being movable by said cam means upon rotation thereof into engagement with the amber signal circuit contact, a relay operable when energized to furnish power to said first movable contact and when deenergized to furnish power to the red signal, a circuit for energizing said relay and said motor and including said second movable contact, said second movable contact being connected to the red signal circuit of one of the other control units, and electro-responsive means operable to move said detent out of engagement with the housing and being connected in the amber signal circuit of said other control unit.

8. A traffic signal control apparatus for controlling the green, amber and red signals on each street of an intersection having two or more streets comprising an individual control unit for the signals on each street, each unit including a plurality of switches for controlling the signal circuits, a cam shaft, cam means mounted on the shaft for actuating said switches, motion transmitting means connecting said motor and cam shaft including a freely rotatable housing, gearing arranged in said housing, said gearing being operable by the motor while said housing is restrained against rotation to effect rotation of said cam shaft from initial position to actuate said switches through a cycle to successively display the red, amber and green signals to the street under the control of said unit, a detent movable into and out of engagement with said housing and being operable when in engagement with the housing to hold the same against rotation, means yieldingly opposing rotation of said cam shaft by the motor and being operable to effect retrograde movement of said shaft to return the cam means to initial position when said detent is moved out of engagement with said housing, electro-responsive means operable when energized to move said detent out of engagement with the housing, and said means being energized concurrently with the display of the amber signal under the control of one of said other control units, and switching means operable upon the display of the red signal by said other control unit to energize said motor, and means for adjusting the initial position of said cam means.

9. A traffic signal control apparatus for con-

trolling the green, amber and red signals on each street of an intersection having two or more streets comprising an individual control unit for the signals on each street, each unit including a cam shaft, cam means mounted on the cam shaft, a motor, motion transmitting means connecting said motor and cam shaft including a freely rotatable housing and being operable while said housing is restrained against rotation to effect rotation of said cam shaft by the motor to move the cam means from initial position through a cycle, detent means movable into and out of engagement with said housing and being operable when in engagement with the housing to hold the same against rotation, and means yieldingly opposing rotation of said cam shaft and being operable to effect retrograde movement of said shaft to return the cam means to its initial position when said detent is moved out of engagement with the housing, a pair of contacts connected to the green and amber signal circuits, a movable contact, said movable contact being positioned in engagement with the green signal circuit contact when said cam is in its initial position, and being movable by said cam means upon rotation thereof into engagement with the amber signal circuit contact, a relay operable when energized to furnish power to said first movable contact and when deenergized to furnish power to the red signal, a circuit for energizing said relay and said motor and including said second movable contact, said second movable contact being connected to the red signal circuit of one of the other control units, and electro-responsive means operable to move said detent out of engagement with the housing and being connected in the amber signal circuit of said other control unit, and means for adjusting the initial position of said cam means.

10. A traffic signal control apparatus for controlling the green, amber and red signals on each street of an intersection having two or more streets comprising an individual control unit for the signals on each street, each unit including a plurality of switches for controlling the signal circuits, a cam shaft, cam means mounted on the shaft for actuating said switches, motion transmitting means connecting said motor and cam shaft including a freely rotatable housing, gearing arranged in said housing, said gearing being operable by the motor while said housing is restrained against rotation to effect rotation of said cam shaft from initial position to actuate said switches through a cycle to successively display the red, amber and green signals to the street under the control of said unit, a detent movable into and out of engagement with said housing and being operable when in engagement with the housing to hold the same against rotation, means yieldingly opposing rotation of said cam shaft by the motor and being operable to effect retrograde movement of said shaft to return the cam means to initial position when said detent is moved out of engagement with said housing, electro-responsive means operable when energized to move said detent out of engagement with the housing, and said means being energized concurrently with the display of the amber signal under the control of one of said other control units, and switching means operable upon the display of the red signal by said other control unit to energize said motor, and means for adjusting the actuation of the amber signal circuit switch independently of the actuation of the green signal circuit switch.

11. A traffic signal control apparatus for controlling the green, amber and red signals on each street of an intersection having two or more streets comprising an individual control unit for each street, each control unit including timer operated means operable when energized to move from initial position through a cycle to successively display the green, amber and red signals on its street, means cooperable, upon the display of the amber signal, to return another one of said units to its initial position, and means operable, upon the display of the red signal to energize said other control unit, and means operable to adjust the duration of the display of the green signal independently of the display of the amber or red signal of said unit and independently of the amber and green signals of each of the other units.

12. A traffic signal control apparatus for controlling the green, amber and red signals on each street of an intersection having two or more streets comprising an individual control unit for each street, each control unit including timer operated means operable when energized to move from initial position through a cycle to successively display the green, amber and red signals on its street, means cooperable, upon the display of the amber signal, to return another one of said units to its initial position, and means operable, upon the display of the red signal to energize said other control unit, and means operable to adjust the duration of the amber signal independently of the duration of the green or red signal of said unit and independently of the green and amber signals of each of the other units.

13. A traffic signal control apparatus for controlling the green, amber and red signals on each street of an intersection having two or more streets comprising an individual control unit for each street, each control unit including timer operated means operable when energized to move from initial position through a cycle to successively display the green, amber and red signals on its street, means cooperable, upon the display of the amber signal, to return another one of said units to its initial position, and means operable, upon the display of the red signal to energize said other control unit, and means operable to increase the duration of the green and amber signals independently and without shortening the duration of any signal of any of said units.

14. A traffic signal control apparatus for controlling the green, amber and red signals on each street of an intersection having two or more streets comprising an individual control unit for each street, each control unit including timer operated means operable when energized to move from initial position through a cycle to successively display the green, amber and red signals on its street, means cooperable, upon the display of the amber signal, to return another one of said units to its initial position, and means operable, upon the display of the red signal to energize said other control unit, and means operable to decrease the duration of the green and amber signals independently and without increasing the duration of any other signal of any other unit.

JOHN J. ALLES.