US00D607331S

(12) United States Design Patent

Booth et al.

(10) Patent No.: US D607,331 S

(45) Date of Patent: ** *Jan. 5, 2010

(54) **CONTAINER**

(75) Inventors: **Peter Booth**, Marlborough (GB); **Corinne Elizabeth Elstow**, Marlborough (GB); **John David Lamb**, Bottlesford-Pewsey (GB); **Dominique Celine Ignace Marie Geeraert**, Erembodegem (BE)

(73) Assignee: **The Procter & Gamble Company**, Cincinnati, OH (US)

(**) Term: **14 Years**

(21) Appl. No.: **29/308,459**

(22) Filed: **Jun. 19, 2008**

(30) **Foreign Application Priority Data**

Dec. 20, 2007 (EM) 000846779

(51) **LOC (9) Cl.** **09-01**

(52) **U.S. Cl.** **D9/516**; 540/551; 540/540; 540/557

(58) **Field of Classification Search** D9/682, D9/686, 688, 689, 690, 724, 516, 520, 522, D9/529, 530, 537, 538, 540, 541, 544, 545, D9/546, 549, 551, 556, 557, 564, 569, 570, D9/571; 215/381–385

See application file for complete search history.

(56) **References Cited**

U.S. PATENT DOCUMENTS

D374,625 S * 10/1996 Flurer et al. D9/542
D422,508 S * 4/2000 Restrepo D9/724
D442,867 S * 5/2001 Krishnakumar et al. D9/537
D445,177 S * 7/2001 Cogger D24/120
D445,178 S * 7/2001 Cogger D24/120
D451,032 S * 11/2001 Iizuka et al. D9/569
D482,625 S * 11/2003 Crawford et al. D9/564
D498,680 S * 11/2004 Cleary D9/542
D519,380 S * 4/2006 Leoncavallo et al. D9/530
D522,870 S * 6/2006 Venkataraman et al. D9/538
D523,345 S * 6/2006 Kamineni D9/537
D524,657 S * 7/2006 Harris et al. D9/522
D527,645 S * 9/2006 Pedmo et al. D9/542
D544,364 S * 6/2007 Archeny et al. D9/560
D546,691 S * 7/2007 Lepoitevin D9/522
D547,665 S * 7/2007 Lepoitevin D9/541
D548,599 S * 8/2007 Blasko D9/516
D565,417 S * 4/2008 Lee et al. D9/541
D566,564 S * 4/2008 Lee et al. D9/521
D568,164 S * 5/2008 Dodge et al. D9/544
D569,733 S * 5/2008 Dodge et al. D9/544
D577,593 S * 9/2008 Hestehave D9/541
D582,778 S * 12/2008 Burson D9/536
D583,248 S * 12/2008 Little D9/557

* cited by examiner

Primary Examiner—Stella M Reid
Assistant Examiner—Elizabeth J Oswecki
(74) *Attorney, Agent, or Firm*—David V. Upite; Kim William Zerby

(57) **CLAIM**

The ornamental design for a container, as shown and described.

DESCRIPTION

FIG. **1** is an isometric view of a container, showing our new design;

FIG. **2** is a left view thereof;

FIG. **3** is a right thereof;

FIG. **4** is a front view thereof;

FIG. **5** is a back view thereof;

FIG. **6** is an enlarged top view thereof; and,

FIG. **7** is an enlarged bottom view thereof.

The broken line showing of a cap, top of a container, sides of the container and bottom of the container is included for the purpose of illustrating only and forms no part of the claimed design.

1 Claim, 7 Drawing Sheets

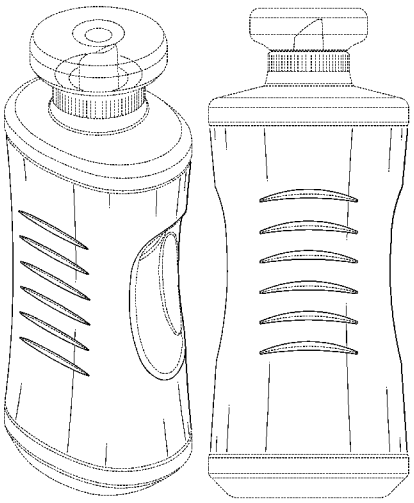

FIG. 1

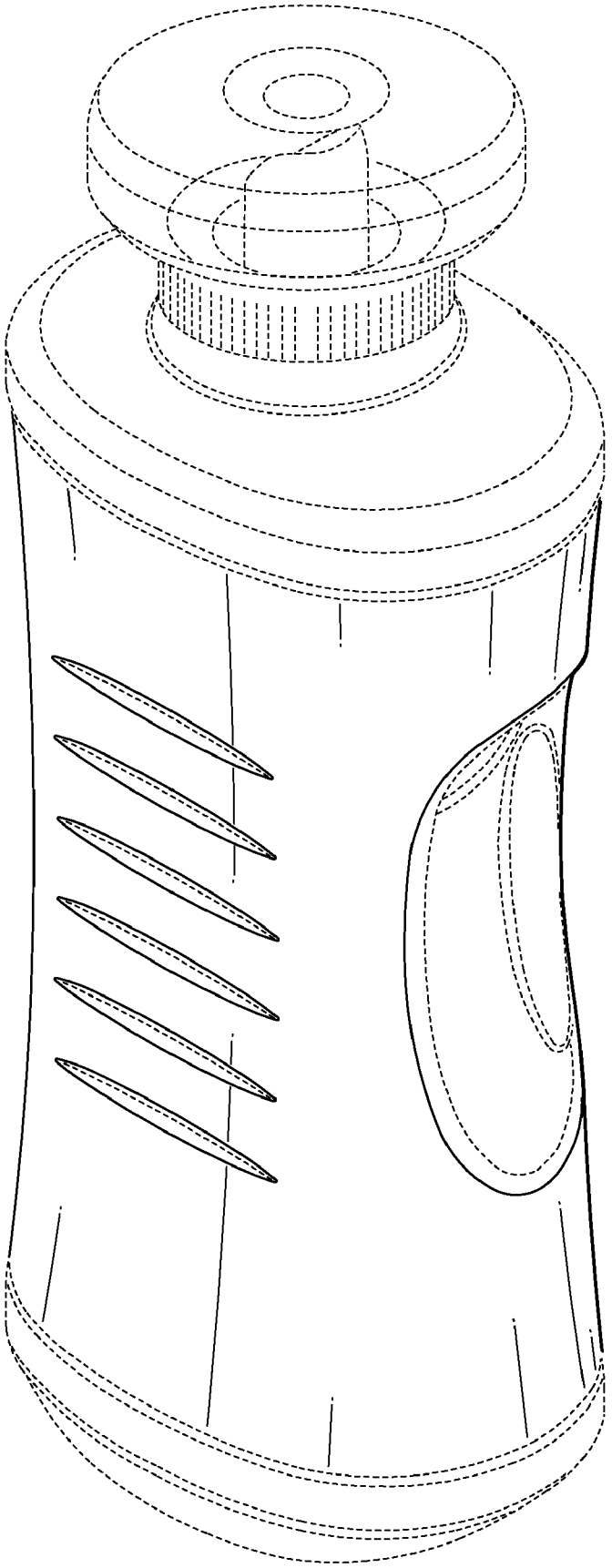

FIG. 2

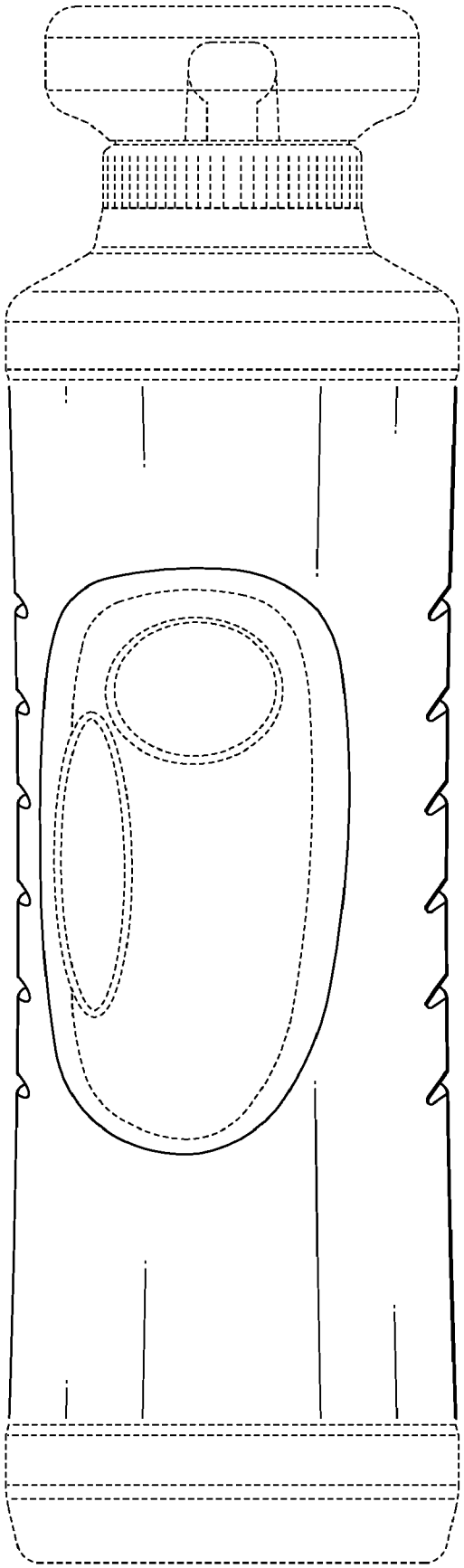

FIG. 3

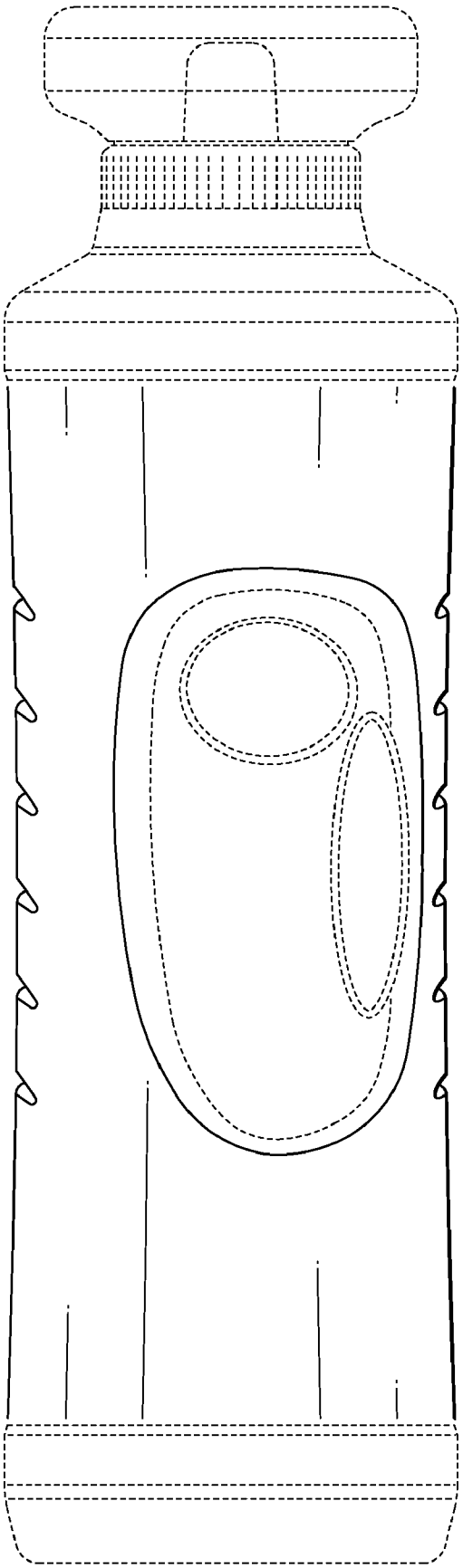

FIG. 4

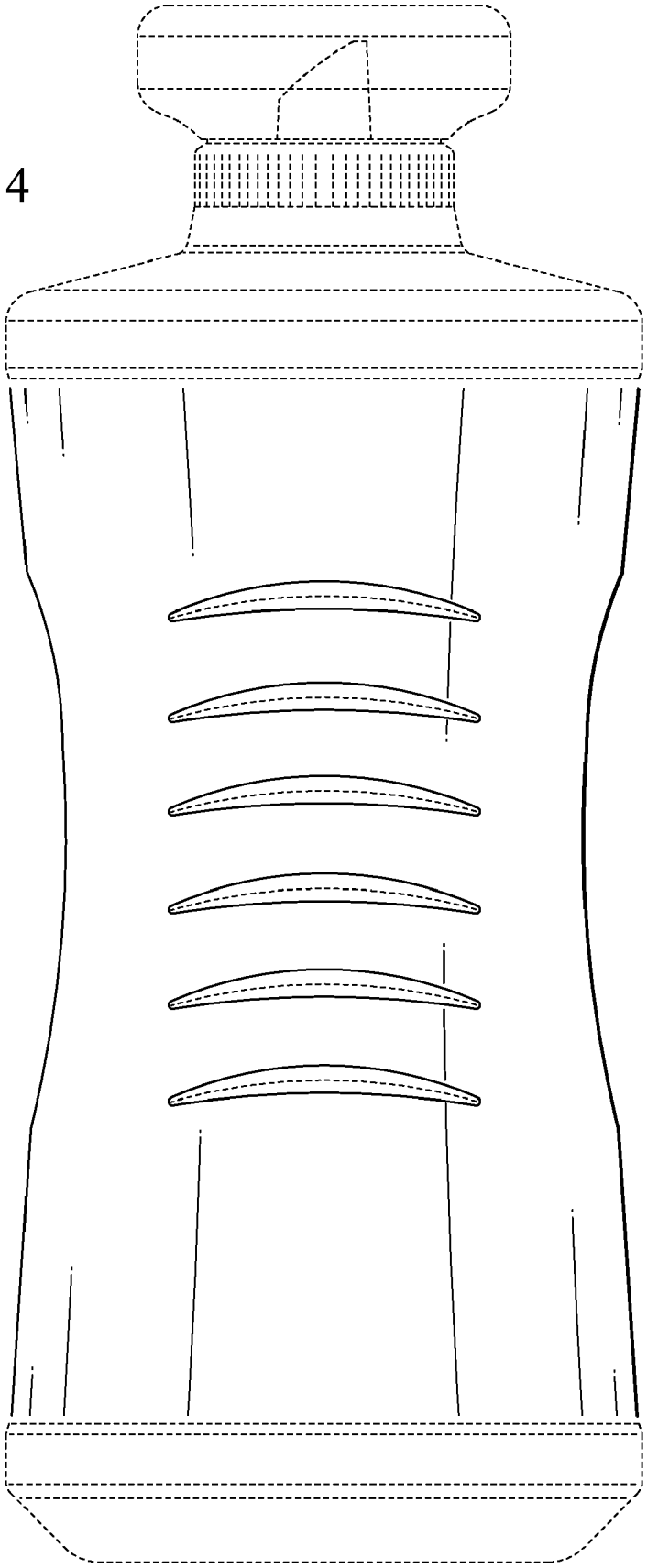

FIG. 5

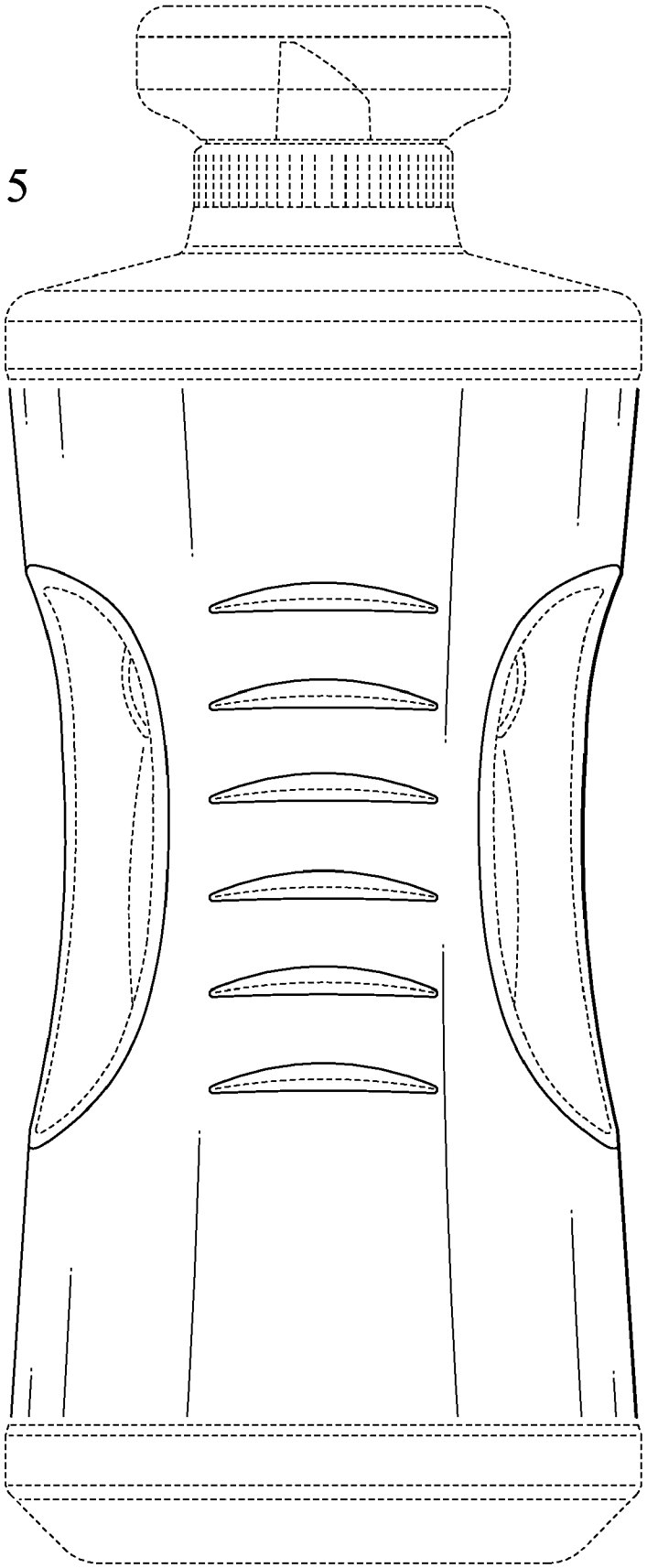

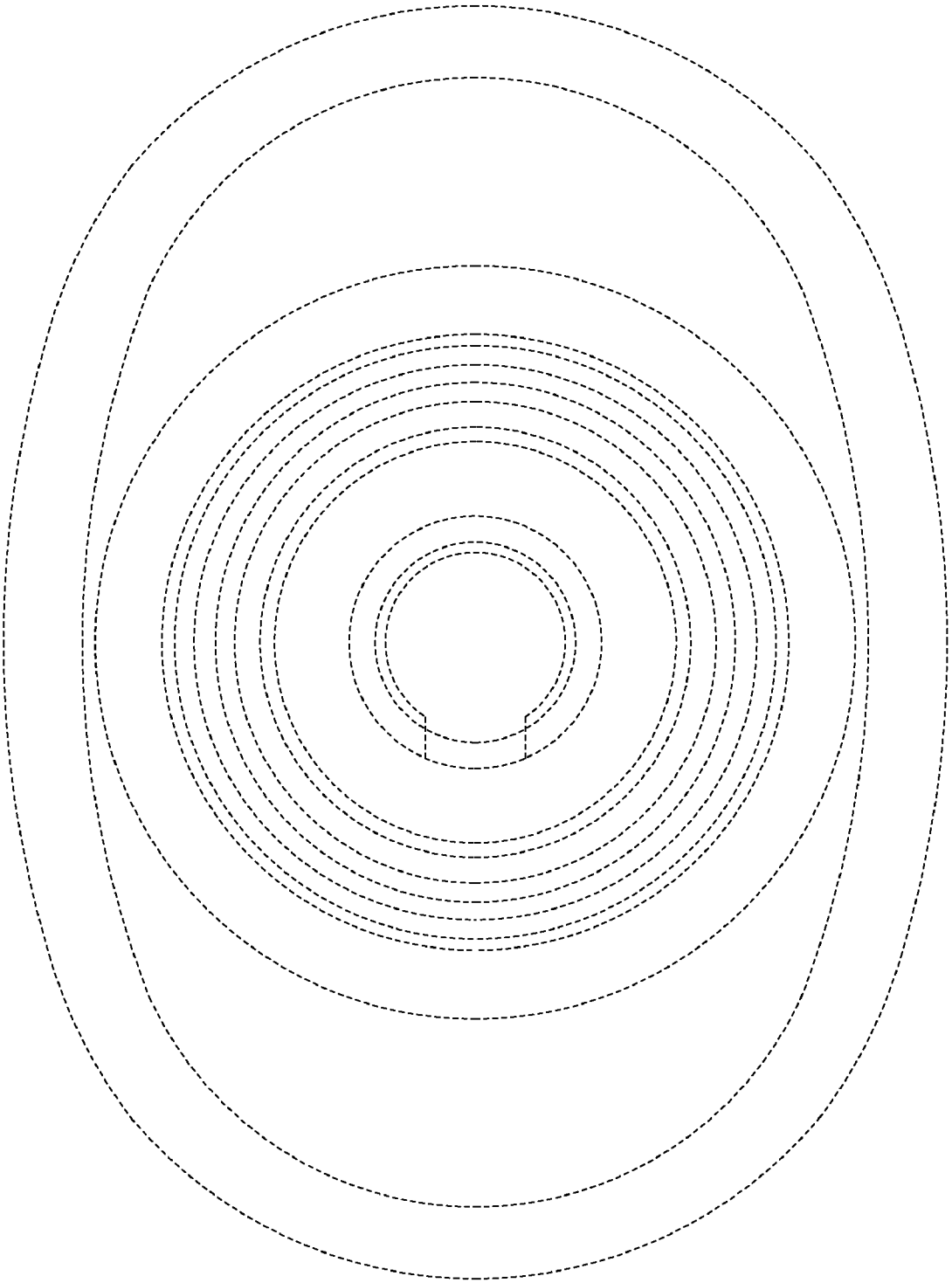

FIG. 6

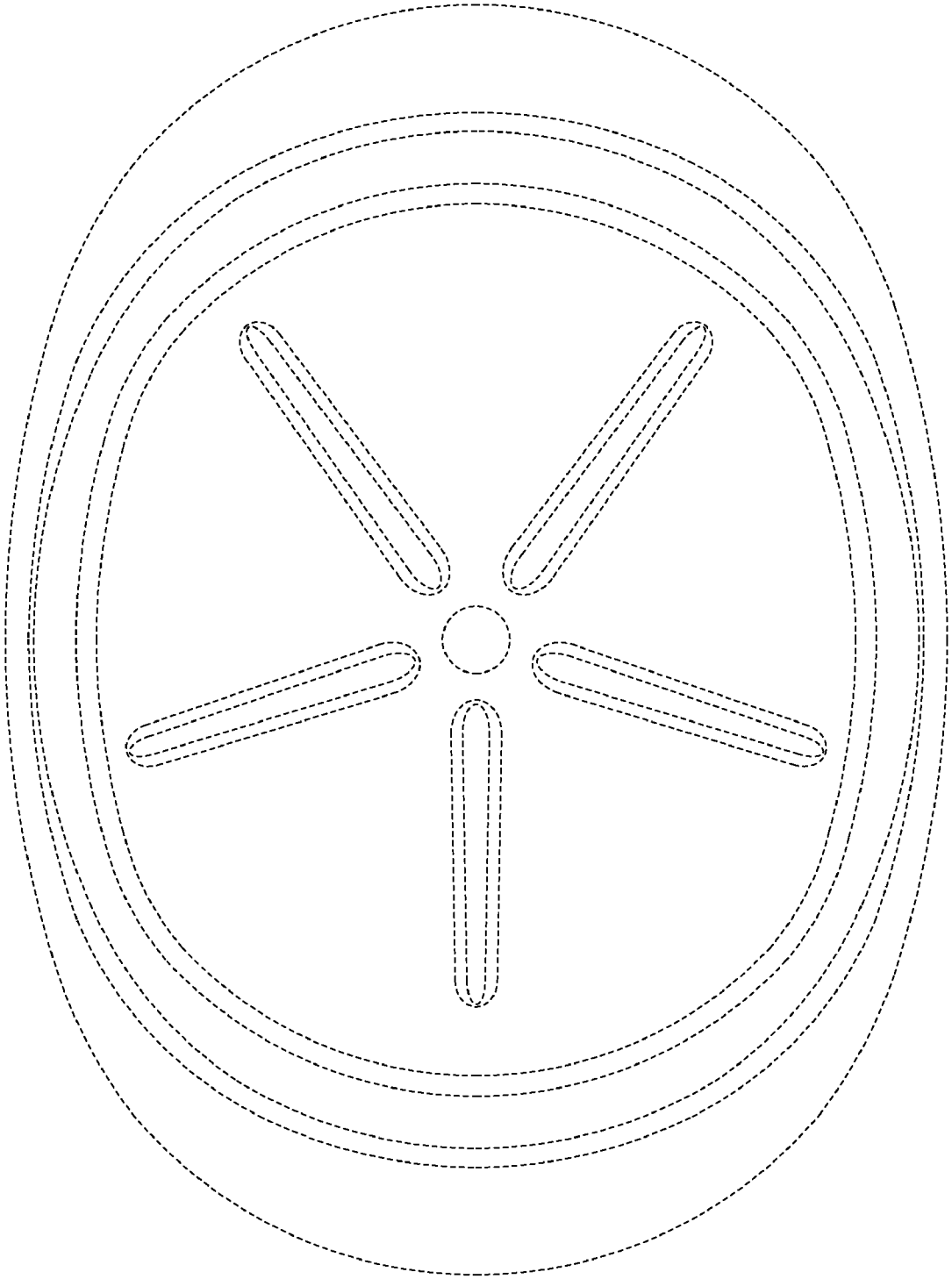

FIG. 7