(12) INTERNATIONAL APPLICATION PUBLISHED UNDER THE PATENT COOPERATION TREATY (PCT)

(19) World Intellectual Property Organization
International Bureau

(43) International Publication Date
09 January 2025 (09.01.2025)

WIPO | PCT

(10) International Publication Number
WO 2025/008489 A1

(51) International Patent Classification:
B66C 23/18 (2006.01) *B63B 77/10* (2020.01)
B66C 23/52 (2006.01) *B63B 35/00* (2020.01)
B63B 27/10 (2006.01) *B63B 17/00* (2006.01)

(21) International Application Number:
PCT/EP2024/068943

(22) International Filing Date:
04 July 2024 (04.07.2024)

(25) Filing Language: English

(26) Publication Language: English

(30) Priority Data:
2035274 05 July 2023 (05.07.2023) NL
2035475 25 July 2023 (25.07.2023) NL

(71) Applicant: **ITREC B.V.** [NL/NL]; 2, Admiraal Trompstraat, 3115 HH SCHIEDAM (NL).

(72) Inventors: **WIJNING, Diederick Bernardus**; c/o 2, Admiraal Trompstraat, 3115 HH SCHIEDAM (NL). **VAN BOVEN, Robin**; c/o 2, Admiraal Trompstraat, 3115 HH SCHIEDAM (NL).

(74) Agent: **EP&C**; P.O. Box 3241, 2280 GE Rijswijk (NL).

(81) Designated States *(unless otherwise indicated, for every kind of national protection available)*: AE, AG, AL, AM, AO, AT, AU, AZ, BA, BB, BG, BH, BN, BR, BW, BY, BZ, CA, CH, CL, CN, CO, CR, CU, CV, CZ, DE, DJ, DK, DM, DO, DZ, EC, EE, EG, ES, FI, GB, GD, GE, GH, GM, GT, HN, HR, HU, ID, IL, IN, IQ, IR, IS, IT, JM, JO, JP, KE, KG, KH, KN, KP, KR, KW, KZ, LA, LC, LK, LR, LS, LU, LY, MA, MD, MG, MK, MN, MU, MW, MX, MY, MZ, NA, NG, NI, NO, NZ, OM, PA, PE, PG, PH, PL, PT, QA, RO, RS, RU, RW, SA, SC, SD, SE, SG, SK, SL, ST, SV, SY, TH, TJ, TM, TN, TR, TT, TZ, UA, UG, US, UZ, VC, VN, WS, ZA, ZM, ZW.

(84) Designated States *(unless otherwise indicated, for every kind of regional protection available)*: ARIPO (BW, CV, GH, GM, KE, LR, LS, MW, MZ, NA, RW, SC, SD, SL, ST, SZ, TZ, UG, ZM, ZW), Eurasian (AM, AZ, BY, KG, KZ, RU, TJ, TM), European (AL, AT, BE, BG, CH, CY, CZ, DE, DK, EE, ES, FI, FR, GB, GR, HR, HU, IE, IS, IT, LT, LU, LV, MC, ME, MK, MT, NL, NO, PL, PT, RO, RS, SE,

(54) Title: INSTALLATION OF A WIND TURBINE ON A FLOATING FOUNDATION

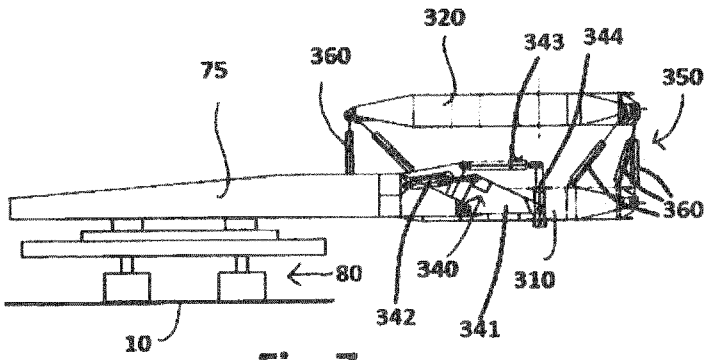

Fig. 7

(57) Abstract: Installation of a wind turbine on a floating, wherein use is made of a vessel with a crane and a motion suppressor device mounted to the hull of the vessel. Engagement with the motion suppressor device counters the rise of the floating foundation caused by the step of increase of buoyancy, thereby the motion suppressor device suppressing at least Z-axis motion of the floating foundation relative to the hull of the vessel. Use is made of an installation tool comprising a lower coupler configured to couple to the mast mounting structure, an upper coupler configured to couple to the mast foot, and a multi-degrees of freedom, preferably six-degrees of freedom, connector assembly having a controllable stiffness, which connector assembly interconnects the lower coupler and the upper coupler, wherein the connector assembly is configured to controllable vary the stiffness of the interconnection.

WO 2025/008489 A1

[Continued on next page]

SI, SK, SM, TR), OAPI (BF, BJ, CF, CG, CI, CM, GA, GN, GQ, GW, KM, ML, MR, NE, SN, TD, TG).

Published:

— *with international search report (Art. 21(3))*

— *in black and white; the international application as filed contained color or greyscale and is available for download from PATENTSCOPE*

INSTALLATION OF A WIND TURBINE ON A FLOATING FOUNDATION

The present invention relates to the installation of a wind turbine on a floating foundation.

In the field of offshore windfarms it is known to install a fixed foundation on the seabed, e.g. a jacket or a monopile, and to then install the wind turbine on top of the fixed foundation. The latter of commonly done in a step-by-step approach, e.g. wherein first the mast is installed on the pre-installed foundation, then the nacelle is mounted on the top of the mast, and then the rotor blades are fitted to the hub of the nacelle. Other approaches, e.g. wherein a nacelle already fitted with two (of the three) rotor blades is supplied in the so-called bunny ears configuration, are also known. It is also known to install the mast together with the nacelle, often called the “tower nacelle assembly” or “TNA” in the industry on the fixed foundation, and then later mounted the rotor blades.

Fixed foundation offshore wind turbines are effective in relatively shallow waters. In deeper waters it is envisaged that floating foundation wind turbines will be most effective, e.g. economical. For example, the document WO2009/131826 discloses several designs of floating foundations for wind turbines.

In the field of floating foundation wind turbines it is at present the common understanding that assembly of the entire floating foundation wind turbine, so the combination of the floating foundation and of the wind turbine, is done remote from the actual windfarm. For example, assembly is done at a port-based yard. The entire floating foundation wind turbine is then towed from the assembly location to the remote offshore windfarm location. For example, Hywind Scotland is a wind farm using floating foundation wind turbines. These wind turbines have a 120 meters tall mast mounted on a spar- type floating foundation. The mounting of the wind turbines on the spar-type floating foundation was done in a fjord in Norway using the Saipem 7000 floating crane. The assemblies were then towed across the North Sea to the coast of Scotland near Peterhead. In the windfarm, three suction anchors anchor each floating foundation to the seabed.

At the site of the offshore windfarm, in contrast to a (shielded) shore-based, e.g. quayside, installation location, the wave conditions are likely to be (over the year) more prominent, so that the floating foundation as well as any crane vessel that is used for installation of the wind

turbine will be subject to relevant sea-state induced motions, generally each with its own dynamic behaviour.

In WO2022/084344 an alternative approach for assembly floating foundation wind turbines and/or for creating a windfarm with one or more floating foundation wind turbines is presented. Generally, the floating foundation comprises a mast mounting structure configured to mount the mast of the wind turbine thereon and having an upwardly directed mounting axis. In this known approach, use is made of a vessel with a floating hull, a crane arranged on the hull, wherein the crane is provided with a hoisting system that is adapted to support the weight of the wind turbine and suspend the wind turbine from the crane. The hoisting system is adapted to raise and lower the wind turbine in a controllable manner. The crane and/or the hoisting system thereof comprises a heave compensation device that is adapted to compensate for sea-state induced heave motion of the wind turbine mast relative to the mast mounting structure of the floating foundation. Use is made of a mast alignment system that is configured to engage on the suspended wind turbine, e.g. on the mast of the suspended wind turbine, and to bring and maintain the mast of the wind turbine in alignment with the mounting axis of the floating foundation in order to compensate for sea-state induced motions, at least including tilt motions in one or more vertical planes, of the wind turbine mast relative to the mounting axis of the floating foundation. The known method comprises - with the hull of the vessel in floating condition and the floating foundation in floating condition - the steps of:

- suspending the wind turbine from the crane by means of the hoisting system,
- positioning the lower end of the mast of the suspended wind turbine above the mast mounting structure of the floating foundation,
- operating the heave compensation device so as to compensate for sea-state induced heave motion of the wind turbine mast relative to the mast mounting structure of the floating foundation,
- operating the mast alignment system so as to bring and maintain the mast of the wind turbine in alignment with the mounting axis of the floating foundation in order to compensate for sea-state induced tilt motions of the wind turbine mast relative to the mounting axis of the floating foundation,
- whilst the heave compensation device and the mast alignment system are in operation, operating the hoisting system and thereby lowering the suspended wind turbine with the lower end portion of the mast onto the mast mounting structure of the floating foundation
- fastening the mast with the lower end portion thereof to the mast mounting structure of the floating foundation.

In embodiments of the WO2022/084344 approach, the alignment system comprises an upper mast engaging device as well as a lower mast engaging device, each device having a mast engagement member as well as an actively controlled motion mechanism that is configured and operated to provide a controlled motion of the mast engagement member in a horizontal plane, wherein the mast engaging devices act on the mast at different heights, e.g. the lower one below the centre of gravity of the wind turbine to be installed and the upper one above said centre of gravity, and wherein the active controlled motion mechanisms are operated to bring and maintain the mast of the suspended wind turbine in alignment with the mounting axis of the floating foundation. For example, each actively controlled horizontal motion mechanism comprises a first set of one or more horizontal tracks extending in a first horizontal direction, said first set supporting at least one first carrier, and said one or more first carriers supporting a second set of one or more horizontal tracks extending in a second horizontal direction different from the first direction, e.g. the first and second direction being orthogonal directions, the second set of one or more horizontal tracks supporting one or more further second carriers supporting said mast engagement device. For example, each mast engaging device of the alignment system comprises a trolley that is vertically guided, e.g. along one or more vertical guide rails, e.g. one or more vertical guide rails mounted on the hull of the vessel and/or on the crane, the trolley supporting the mast engaging member with interposition of the actively controlled motion mechanism between the trolley and the mast engaging member to provide a controlled motion of the mast engagement member in a horizontal plane, e.g. in two orthogonal horizontal directions.

In embodiments of the WO2022/084344 approach, the floating foundation is restrained by a restraining system at least, or solely, in the horizontal plane relative to the vessel during the wind turbine installation process. For example, the restraining involves the use of a vessel mounted gripper device, which gripper device has an engagement member that engages on the floating foundation, e.g. on the mast mounting structure of the floating foundation, and which gripper device has actively controlled motion mechanism that is configured and operated to provide a controlled motion of the engagement member relative to the hull of the vessel and thereby effects a controlled restraining of the engaged floating foundation relative to the hull of the vessel.

The present invention aims to provide measures that further enhance installation of a wind turbine on a floating foundation that is in floating condition and subject to sea-state induced motions.

As preferred, this installation is done at the site of the offshore windfarm. It will be appreciated that this allows to avoid the long-distance towing of the complete wind turbine from a shore-based, e.g. quayside, location to the windfarm. Such towing takes considerable efforts, is time-consuming, and may be impaired by weather conditions.

More preferably, the floating foundation is already anchored, e.g. with at least a part of the anchoring arrangement, to the seabed at its final location in the windfarm prior to the installation of the wind turbine on the foundation.

The floating foundation comprises a mast mounting structure configured to mount the mast of the wind turbine thereon and having an upwardly directed mounting axis. The foundation may be of any design, e.g. of any designs disclosed in WO2009/131826.

For example, the floating foundation comprises three or more interconnected and buoyant stabilizing columns, e.g. three stabilizing columns interconnected by beams in a triangular arrangement, e.g. an equilateral triangle, when seen from above.

For example, the floating foundation, e.g. each buoyant column thereof, is provided with one or more ballast tanks for containing a ballast, e.g. a ballast liquid, e.g. ballast water. In an embodiment, a ballast control system is provided which is configured for moving the ballast liquid between ballast tanks, e.g. of the at least three stabilizing columns, to adjust a vertical orientation of the upwardly directed mounting axis.

In an embodiment, one of the stabilizing columns of the floating foundation is embodied with a mast mounting structure configured to mount the mast of the wind turbine thereon.

In an embodiment, the floating foundation comprises one or more water-entrapment plates, e.g. each of the plates being attached to a lower end of one of the stabilizing columns.

According to a first aspect thereof the invention provides a method for installation of a wind turbine on a floating foundation that is in floating condition and subject to sea-state induced motions, e.g. at the site of an offshore windfarm, wherein the wind turbine to be installed comprises at least a wind turbine mast having a mast foot and a mast top, preferably also comprises a nacelle mounted on the mast top, preferably without any rotor blades, wherein the floating foundation comprises a mast mounting structure configured to mount the mast of the wind turbine thereon and secure the mast foot to the mast mounting structure, e.g. wherein the mast mounting structure and the mast foot are each provided with an

annular flange structure, which flange structures are to be fastened to one another by multiple fasteners,

wherein the mast mounting structure has an upwardly directed mounting axis,

wherein use is made of a vessel which is in floating condition and comprises:

- a floating hull,

-a crane arranged on the hull, wherein the crane is provided with a hoisting system comprising winch driven hoist cables that is adapted to support the weight of the wind turbine and suspend the wind turbine from the hoist cables, which hoisting system is adapted to raise and lower the wind turbine in a controllable manner,

- a motion suppressor device mounted to the hull of the vessel,

wherein the vessel is arranged in vicinity of the floating foundation allowing the crane to position the wind turbine above the mast mounting structure,

wherein sea-state induces relative motion between the floating foundation and the hull of the vessel in horizontal X- axis and Y- axis directions, in vertical Z-as axis direction, and in rotational directions about the horizontal X- axis and Y- axis and about the vertical Z-axis,

wherein the method comprises:

- engaging the motion suppressor device with the floating foundation,
- increasing buoyancy of the floating foundation, e.g. by de-ballasting the floating foundation, e.g. by pumping ballast water from the floating foundation into one or more ballast tanks of the vessel,

wherein the engagement with the motion suppressor device counters the rise of the floating foundation caused by the increase of buoyancy, thereby the motion suppressor device suppressing at least Z-axis motion of the floating foundation relative to the hull of the vessel,

preferably, the buoyant force of the floating foundation suppressed by the suppressor device being at least 50%, e.g. 75%, of the weight of the wind turbine,

wherein use is made of an installation tool comprising:

- a lower coupler configured to couple to the mast mounting structure,
- an upper coupler configured to couple to the mast foot,

- a multi-degrees of freedom, preferably six-degrees of freedom, connector assembly having a controllable stiffness, which connector assembly interconnects the lower coupler and the upper coupler, wherein the connector assembly is configured to controllable vary the stiffness of the interconnection,

wherein the method further comprises:

- arranging the installation tool at the mast mounting structure and locking the lower coupler to the mast mounting structure,
- suspending the wind turbine from the hoisting system of the crane and moving the suspended wind turbine above the installation tool,
- setting the stiffness of the connector assembly at a low stiffness,
- mating the upper coupler with the mast foot whilst the connector assembly is set at said low stiffness,
- locking the upper coupler to the mast foot,
- gradually increasing stiffness of the connector assembly to a high stiffness so as to cause the suspended wind turbine to be brought in motion synchronized with the mast mounting structure of the floating foundation due to forces transmitted via the connector assembly,
- landing the wind turbine onto the mast mounting structure whilst maintaining the high stiffness of the connector assembly such that the wind turbine is provisionally secured to the floating foundation by means of the installation tool,
- fastening the mast foot of the wind turbine permanently to the mast mounting structure, e.g. by multiple fasteners,
- releasing the installation tool from the mast foot and the mast mounting structure.

In the method of the first aspect of the invention, relative Z-motion is suppressed prior to the process of mounting of the wind turbine on the mast mounting structure. Basically, the vessel and foundation are in a sense coupled in Z-direction due to the increased buoyancy of the floating foundation being counteracted by the motion suppressor device mounted to the hull of the vessel.

In embodiments, the increased buoyancy initially causes an upward load exerted by the floating foundation on the motion suppressor device of at least 1000 tonnes. For example, this upward load corresponds to at least 50% of the weight of the wind turbine that is landed on the mast mounting structure. For example, the increased buoyancy is chosen to compensate for at least 75%, e.g. 100%, of the weight of the wind turbine. The increased

buoyancy avoids or reduces undue changes in draft and/or trim of the floating foundation when the wind turbine is landed on the mast mounting structure.

For example, the vessel is a semi-submersible type vessel.

In embodiments, the weight of the wind turbine that is landed on the mast mounting structure is more than 1000 tonnes, e.g. more than 2000 tonnes. For example, the mast weighs about 1200 tonnes and a nacelle mounted thereon weighs 1000 tonnes. For example, the wind turbine to be landed, without rotor blades, has a weight of 2340 tonnes, e.g. for a 15 MW wind turbine.

In embodiments, the mast foot has a diameter of 8 meters or more, e.g. between 11 and 15 meters.

In practical embodiments, the relative motions of the floating wind turbine and the hull of the vessel may be several meters in each of X, Y, and Z-axis direction (before suppression of motion), as well as 1 degree or more of rotational motion about any of the X, Y, and Z-axis.

In practical embodiments, the suppressor device is arranged on the longitudinal axis of the hull of the vessel, e.g. at the stern of the vessel, e.g. wherein the crane is also mounted at the stern of the vessel.

The installation tool is used to first establish a flexible connection between the mast mounting structure and the mast foot as the connector assembly is initially set at a low stiffness. This low stiffness setting, in practice, will allow for the upper coupler to float relative to the lower coupler which is already locked to the mast mounting structure. At this stage, the wind turbine is suspended from the hoisting system of the crane above the mast mounting structure, and will be subject to motion that is primarily caused by sea state induced motions of the vessel and/or by wind forces, etc. For example, the wind turbine may exhibit a pendulum motion. The installation tool is then operated to increase the stiffness of the connection in a gradual manner to a high stiffness, which includes a stepwise manner, so that the floating foundation and the wind turbine become more and more rigidly connected to one another. This has the effect that the suspended wind turbine is brought in a motion which is synchronized with the mast mounting structure of the floating foundation due to forces transmitted via the connector assembly. Due to the synchronization, the mast then becomes and remains aligned with the mounting axis, which facilitates the subsequent landing of the wind turbine onto the mast mounting structure. Or, in other words, the installation tool ensures equal motion of the mast mounting structure and the mast foot prior to landing of the wind turbine.

This approach allows to achieve that, for example, the flange structures on the mast mounting structure and on the mast foot are brought into parallel arrangement to one another and kept in such parallel arrangement prior to landing. Due to the suppression of relative Z-motion by the motion suppressor device as explained, the will be no, or limited, relative Z-displacement between the parallel arranged flange structures at this stage. Once this situation is reached, the wind turbine can be landed, in practice by operating the hoisting system of the crane, with the flange structures remaining parallel to one another. In the landed situation, the installation tool, which is still at a high stiffness, acts to provisionally secure the wind turbine to the floating foundation.

Due to the landing of the wind turbine on the floating foundation, the increased buoyancy acts to absorb the added weight of the wind turbine, at least in part, preferably the majority of the added weight, e.g. all of the added weight. This reliefs the suppressor device in part or entirely from the upward force initially caused by the increased buoyancy.

Once the wind turbine has been landed on the mast mounting structure and is temporarily secured by the high stiffness of the connector assembly, preferably the crane may be operated to cease suspending the wind turbine, e.g. the hoisting system being slackened and/or the hoisting system being disconnected from the wind turbine.

The landed wind turbine is then permanently fastened to the mast mounting structure, e.g. by provision of multiple fasteners.

One the permanent fastening is obtained, the installation tool is released from the mast foot and the mast mounting structure, allowing for use in the installation of a further wind turbine on another floating foundation.

In embodiments, the installation tool is mounted to the motion suppressor device. In a preferred embodiment, the tool is mounted to the motion suppressor device such that the tool establishes the engagement between the motion suppressor device and the floating foundation, preferably the lower coupler being connected to the motion suppressor device, e.g. gimballing about X-axis and Y-axis, e.g. freely gimballing about said axes. In embodiments, the lower coupler is displaceable in Z-axis direction relative to the motion suppressor device, e.g. by one or more Z-axis motion actuators, e.g. in a controllable manner, e.g. the one or more Z-axis motion actuators being configured to vary stiffness and/or damping thereof, and/or the one or more Z-axis motion actuators being configured to provide for control of vertical position of the lower coupler relative to the motion suppressor device.

In another embodiment, the installation tool is distinct and independent from the motion suppressor device. As will be explained herein with reference to another aspect of the invention, the installation tool may also be of benefit in other approaches for installation of a wind turbine on a foundation, including both a fixed foundation and a floating foundation, using a vessel with a floating hull and a crane thereon from which the wind turbine is suspended. For example, the installation tool may be of benefit in the approach disclosed in WO2022/084344.

In embodiments, the motion suppressor device is rigid in Z-axis direction relative to the hull of the vessel.

In embodiments, the motion suppressor device is movable in a horizontal plane, preferably only in the horizontal plane, relative to the hull of the vessel. For example, the motion suppressor device is movable over at least three meters, e.g. six meters, in each of X-axis and Y-axis relative to the hull of the vessel.

In embodiments, the motion suppressor device is configured to control motion of the mast mounting structure in the X-axis direction and in the Y-axis direction, whilst suppressing motion in the Z-axis direction. For example, the motion suppressor device is configured to dampen motion of the mast mounting structure in the X-axis direction and in the Y-axis direction. A dampened motion of the mast mounting structure in the X-axis direction and in the Y-axis direction provided by the motion suppressor device is preferred in order to avoid excessive loads, e.g. on the hull of the vessel and/or the floating foundation. Such excessive forces are, e.g. to be expected when a fully rigid connection would be established between the floating foundation and the vessel.

In view of relative motion it is noted that in practical embodiments, the floating foundation will be anchored via anchoring lines, e.g. catenary anchoring lines, and the vessel will be held in position by means of a dynamic positioning system (DP system) of the vessel. The accuracy of the DP system plays a role in the relative motion between vessel and floating foundation.

In embodiments, the motion suppressor device comprises motion actuators configured for causing movement of the motion suppressor device relative to the hull in a horizontal plane, preferably only in the horizontal plane relative to the hull of the vessel. For example, there are X-axis motion actuators as well as Y-axis motion actuators.

In embodiments, the motion suppressor device comprises a motion control unit for controlling the motion actuators thereof. For example, the motion control unit is configured to provide a damping mode, wherein the motion actuators dampen motion of the motion suppressor

device relative to the hull, e.g. in a horizontal plane, preferably only in the horizontal plane relative to the hull of the vessel.

In embodiments, a monitoring system is provided which is configured and operated to monitor position and/or motion of a portion of the floating foundation on which motion suppressor device engages, e.g. the mast mounting structure, e.g. via the lower coupler of the installation tool. This monitoring system is, in embodiments, linked to the motion control unit of the motion actuators of the motion suppressor device. In an embodiment, the motion control unit is configured to provide a follow mode that is used in the routine of engaging the motion suppressor device with the floating foundation, wherein – based on signals provided by the monitoring system – the motion actuators of the motion suppressor device are actively driven to synchronize and line-up the engaging portion of motion suppressor device relative to the portion of the floating foundation on which motion suppressor device engages, e.g. the mast mounting structure.

In embodiments, the installation tool, e.g. the lower coupler thereof, is mounted to the motion suppressor device via a Z-axis motion mechanism that is configured to allow for controlled motion of the installation tool relative to the motion suppressor device. In embodiments, the Z-axis motion mechanism is configured to allow for controlled variation of vertical stiffness of the Z-axis motion mechanism.

In embodiments, the suppressor device comprises a cantilevered arm, e.g. a pair of cantilevered arms, wherein an inner end of each cantilevered arm is connected to the hull, and wherein the cantilevered arm(s) each project outward from the hull of the vessel. The cantilevered arm(s) is/are configured to absorb the upward force exerted by the increased buoyancy of the floating foundation so as to suppress relative Z-axis motion.

In a practical embodiment, the installation tool is mounted between a pair of cantilevered arms of the motion suppressor device, e.g. the lower coupler being connected to outer ends of the cantilevered arms.

In embodiments, the connector assembly of the installation tool comprises multiple hydraulic cylinders arranged to allow for setting of stiffness of the connector assembly in all degrees of freedom, e.g. arranged as in a Stewart platform.

In embodiments, setting of the stiffness of the connector assembly is done by setting of the pressure in the multiple hydraulic cylinders. For example, pressure is varied from 25 bar at the low stiffness setting to 150 bar at an intermediate stiffness setting, to 300 bar at the high stiffness setting.

For example, one or more accumulators are associated with the hydraulic cylinders of the connector assembly of the installation tool, e.g. accumulators at different pressures.

For example, the installation tool has multiple pressurized gas tanks connectable via an associated control valve to a medium-separator having a gas filled chamber separated by a piston from a hydraulic liquid filled chamber, the latter being connected to one or more of the hydraulic cylinders. For example, a first set of one or more gas tanks is at a low pressure, a second set at an intermediate pressure, and a third set at a high pressure. By selective switching a set of one or more gas tanks to the medium-separate the hydraulic pressure in the hydraulic cylinders of the connector assembly and thereby the stiffness of the connector assembly is adjustable.

In embodiments, the connector assembly of the installation tool comprises multiple double sided hydraulic cylinders, each having a cylinder body and having a piston rod extending through opposed axial ends of the cylinder body, wherein a piston on the piston rod delimits equal cross-section chambers in the cylinder body. Herein, a controllable throttle bypass is provided between the chambers of each cylinder. In embodiments, the method comprises adjusting the throttle so as to vary the damping of the connector assembly.

In embodiments, each of the lower coupler and the upper coupler comprises a C-shaped main body and a pivotal door member configured to move between an opened and closed position thereof, so that in the closed position the coupler forms an annulus, and the opened position allowing removal of the installation tool after completion of the wind turbine installation. Mating the lower coupler with the floating foundation, e.g. the mast mounting structure thereof, may be done from above with the door closed so that the coupler form an annulus. Mating the upper coupler with the mast foot may also be done with the door thereof closed. In practical embodiments, the lower and upper coupler have dimensions to accommodate therein the mast mounting structure and mast foot, respectively, of a diameter of at least 8 meters, e.g. of diameter between 8 and 15 meters. This means that the couplers are very significant is size, also taking into account the loads to the couplers are subjected during the installation of the wind turbine. In this regard, it is preferred for the coupler to have door actuators, e.g. hydraulic cylinders, configured to selectively open and close the doors.

For mating of the couplers as well as for locking of the couplers to the mast mounting structure and mast foot, respectively, the couplers will in practical embodiments each comprise one or more actuable components, e.g. hydraulically driven components. For example, the installation tool comprises a power pack, e.g. including a hydraulic power unit, for driving the actuable components.

The installation tool may be embodied to provide for controlled rotation of the locked mast about the mounting axis in view of alignment of bolt holes in the flange structures. This may, in practice, involve only a minor angular motion as the flanges will have a multitude of bolt holes, so that small angular corrections will suffice to align bolt holes.

In embodiments, the installation tool includes cooperating landing guide members that become operational during the landing of the wind turbine on the mast mounting structure, e.g. one or more guide pillars on one of the couplers entering into guide holes on the other coupler.

In embodiments, in additional to the variable stiffness connection assembly of the installation tool, the tool is provided with latching members configured and operated to latch the couplers directly to one another once the landing of the wind turbine has been completed. The latching members, e.g. motor driven pins on one coupler that are driven into corresponding apertures in the other coupler, may assist in keeping the wind turbine provisionally connected to the floating foundation.

In embodiments, the upper coupler of the installation tool is provided with an operable mating mechanism configured and operated to initially engage on the mast foot with a low stiffness and to gradually increase said stiffness so that the upper coupler becomes synchronized with the mast foot in the horizontal directions, prior to the upper coupler being locked, i.e. rigidly coupled, to the mast foot completing the mating step.

Increasing buoyancy of the floating foundation, e.g. in particular the portion thereof provided with the mast mounting structure, e.g. the buoyant stabilizing column on which the mast mounting structure is arranged, may in practical embodiments be done by de-ballasting the floating foundation. For example, ballast water is pumped from the floating foundation into one or more ballast tanks of the vessel. As explained here, the weight of the removed ballast water may be at least 50% of the weight of the wind turbine to be landed, preferably about the same as the weight of the wind turbine to be landed. In practical embodiments, de-ballasting the floating foundation may take several hours, e.g. about six hours when de-ballasting some 2000 – 2500 m3 of ballast water using one or more pumps, e.g. pumps on the vessel.

In embodiments, the increasing of buoyancy is done such that upon landing of the wind turbine an effective upwards force, albeit much smaller than initial, remains on the suppressor device so that vertical contact and suppression of motion remains active also directly after landing.

In practical embodiments, the wind turbine is suspended from winch driven cables that extend to lifting points at or near the mast foot, at least to lifting points below the center of gravity of the suspended wind turbine. A spreader or stabilizer device may be provided between the winch driven cables and the mast at a height above the center of gravity of the suspended wind turbine. Preferably, the crane has four hoisting assemblies, each with a winch driven cable and an associated winch from which the wind turbine is suspended, preferably the winches being configured to be driven in constant tension mode with load equalizing so that each hoisting assembly carries the same load.

The crane of the vessel and/or the hoisting system may comprise a heave compensation device but as the inventive method provides for suppression of Z-axis relative motion between the mast mounting structure and the vessel, the use thereof is not necessary in the process of installation of the wind turbine, or is of limited relevance. Heave compensation devices are well known in the art, both in passive and active embodiments or hybrids thereof.

The first aspect of the invention also relates to a vessel for installation of a wind turbine on a floating foundation that is in floating condition and subject to sea-state induced motions, e.g. at the site of an offshore windfarm, wherein the wind turbine to be installed comprises at least a wind turbine mast having a mast foot and a mast top, preferably also comprises a nacelle mounted on the mast top, preferably without any rotor blades,
wherein the floating foundation comprises a mast mounting structure configured to mount the mast of the wind turbine thereon and fasten the mast foot to the mast mounting structure, wherein the mast mounting structure has an upwardly directed mounting axis, e.g. wherein the mast mounting structure and the mast foot are each provided with an annular flange structure, which flange structures are to be fastened to one another by multiple fasteners,
which vessel comprises:

- a floating hull,
-a crane arranged on the hull, wherein the crane is provided with a hoisting system comprising winch driven hoist cables that is adapted to support the weight of the wind turbine and suspend the wind turbine from the hoist cables, which hoisting system is adapted to raise and lower the wind turbine in a controllable manner,
- a motion suppressor device mounted to the hull of the vessel,

wherein the vessel is configured to be arranged in vicinity of the floating foundation allowing the crane to position the wind turbine above the mast mounting structure,

wherein, in use, sea-state induces relative motion between the floating foundation and the hull of the vessel in horizontal X- axis and Y- axis directions, in vertical Z-as axis direction,

and in rotational directions about the horizontal X- axis and Y- axis and about the vertical Z-axis,

wherein the vessel is provided with an installation tool comprising:

- a lower coupler configured to couple to the mast mounting structure,
- an upper coupler configured to couple to the mast foot,
- a multi-degrees of freedom, preferably six-degrees of freedom, connector assembly having a controllable stiffness, which connector assembly interconnects the lower coupler and the upper coupler, wherein the connector assembly is configured to controllable vary the stiffness of the interconnection,

Wherein the vessel in conjunction with the installation tool is configured to perform a method which comprises:

- engaging the motion suppressor device with the floating foundation,
- increasing buoyancy of the floating foundation, e.g. by de-ballasting the floating foundation, e.g. by pumping ballast water from the floating foundation into one or more ballast tanks of the vessel,

wherein the engagement with the motion suppressor device counters the rise of the floating foundation caused by the increase of buoyancy, thereby the motion suppressor device suppressing at least Z-axis motion of the floating foundation relative to the hull of the vessel,

preferably, the buoyant force of the floating foundation suppressed by the suppressor device being at least 50%, e.g. 75%, of the weight of the wind turbine,

wherein the method further comprises:

- arranging the installation tool at the mast mounting structure and locking the lower coupler to the mast mounting structure,
- suspending the wind turbine from the hoisting system of the crane and moving the suspended wind turbine above the installation tool,
- setting the stiffness of the connector assembly at a low stiffness,
- mating the upper coupler with the mast foot whilst the connector assembly is set at said low stiffness,
- locking the upper coupler to the mast foot,

- gradually increasing stiffness of the connector assembly to a high stiffness so as to cause the suspended wind turbine to be brought in motion synchronized with the mast mounting structure of the floating foundation due to forces transmitted via the connector assembly,
- landing the wind turbine onto the mast mounting structure whilst maintaining the high stiffness of the connector assembly such that the wind turbine is provisionally secured to the floating foundation by means of the installation tool,
- fastening the mast foot of the wind turbine permanently to the mast mounting structure, e.g. by multiple fasteners,
- releasing the installation tool from the mast foot and the mast mounting structure.

The vessel, motion suppressor device, and/or installation tool may have one or more features as discussed herein with reference to the method of the first aspect of the invention.

The crane of the vessel may be embodied according to the third aspect of the invention.

The first aspect of the invention also relates to a vessel for installation of a wind turbine on a floating foundation that is in floating condition and subject to sea-state induced motions, e.g. at the site of an offshore windfarm, wherein the wind turbine to be installed comprises at least a wind turbine mast having a mast foot and a mast top, preferably also comprises a nacelle mounted on the mast top, preferably without any rotor blades,
wherein the floating foundation comprises a mast mounting structure configured to mount the mast of the wind turbine thereon and fasten the mast foot to the mast mounting structure,
wherein the mast mounting structure has an upwardly directed mounting axis, e.g. wherein the mast mounting structure and the mast foot are each provided with an annular flange structure, which flange structures are to be fastened to one another by multiple fasteners,
which vessel comprises:

- a floating hull,

-a crane arranged on the hull, wherein the crane is provided with a hoisting system comprising winch driven hoist cables that is adapted to support the weight of the wind turbine and suspend the wind turbine from the hoist cables, which hoisting system is adapted to raise and lower the wind turbine in a controllable manner,

- a motion suppressor device mounted to the hull of the vessel for suppressing Z-axis motion of the floating foundation relative to the hull of the vessel.

The motion suppressor device may have one or more features as discussed herein with reference to the method of the first aspect of the invention.

According to a second aspect the invention provides a method for installation of a wind turbine on a floating foundation that is in floating condition and subject to sea-state induced motions, e.g. at the site of an offshore windfarm, wherein the wind turbine to be installed comprises at least a wind turbine mast having a mast foot and a mast top, preferably also comprises a nacelle mounted on the mast top, preferably without any rotor blades, wherein the floating foundation comprises a mast mounting structure configured to mount the mast of the wind turbine thereon and secure the mast foot to the mast mounting structure, e.g. wherein the mast mounting structure and the mast foot are each provided with an annular flange structure, which flange structures are to be fastened to one another by multiple fasteners,

wherein the mast mounting structure has an upwardly directed mounting axis,

wherein use is made of a vessel which is in floating condition and comprises:

- a floating hull,

-a crane arranged on the hull, wherein the crane is provided with a hoisting system comprising winch driven hoist cables that is adapted to support the weight of the wind turbine and suspend the wind turbine from the hoist cables, which hoisting system is adapted to raise and lower the wind turbine in a controllable manner,

wherein the vessel is arranged in vicinity of the floating foundation allowing the crane to position the wind turbine above the mast mounting structure,

wherein sea-state induces relative motion between the floating foundation and the hull of the vessel,

wherein use is made of an installation tool comprising:

- a lower coupler configured to couple to the mast mounting structure,
- an upper coupler configured to couple to the mast foot,
- a multi-degrees of freedom, preferably six-degrees of freedom, connector assembly having a controllable stiffness, which connector assembly interconnects the lower coupler and the upper coupler, wherein the connector assembly is configured to controllable vary the stiffness of the interconnection,

wherein the method further comprises:

- arranging the installation tool at the mast mounting structure and locking the lower coupler to the mast mounting structure,

- suspending the wind turbine from the hoisting system of the crane and moving the suspended wind turbine above the installation tool,
- setting the stiffness of the connector assembly at a low stiffness,
- mating the upper coupler with the mast foot whilst the connector assembly is set at said low stiffness,
- locking the upper coupler to the mast foot,
- gradually increasing stiffness of the connector assembly to a high stiffness so as to cause the suspended wind turbine to be brought in motion synchronized with the mast mounting structure of the floating foundation due to forces transmitted via the connector assembly,
- landing the wind turbine onto the mast mounting structure whilst maintaining the high stiffness of the connector assembly such that the wind turbine is provisionally secured to the floating foundation by means of the installation tool,
- fastening the mast foot of the wind turbine permanently to the mast mounting structure, e.g. by multiple fasteners,
- releasing the installation tool from the mast foot and the mast mounting structure.

The second aspect of the invention effectively proposes to use the installation tool also for methods wherein no use is made of the suppression of Z-axis motion by the interaction of increased buoyancy of the floating foundation with the motion suppressor device as discussed with reference of the first aspect of the invention.

For example, the method and vessel used in the second aspect of the invention correspond to the disclosure of WO2022/084344, which is incorporated herein by reference. Herein, the alignment of the mast as explained in WO2022/084344 is enhanced and/or facilitated by the use of the installation tool. In the approach of WO2022/084344 the Z-axis relative motion is not suppressed but is accommodated by appropriate operation of the heave compensation device.

The second aspect of the invention also relates to an installation tool configured for use in the installation of a wind turbine on a floating foundation,

which installation tool comprises:

- a lower coupler configured to couple to the mast mounting structure,
- an upper coupler configured to couple to the mast foot,
- a multi-degrees of freedom, preferably six-degrees of freedom, connector assembly having a controllable stiffness, which connector assembly interconnects the lower coupler

and the upper coupler, wherein the connector assembly is configured to controllable vary the stiffness of the interconnection.

The installation tool may have one or more features discussed herein with reference to the first aspect of the invention.

The second aspect also relates to a method installation of a wind turbine on a floating foundation, wherein use is made of an installation tool which comprises:

- a lower coupler configured to couple to the mast mounting structure,
- an upper coupler configured to couple to the mast foot,
- a multi-degrees of freedom, preferably six-degrees of freedom, connector assembly having a controllable stiffness, which connector assembly interconnects the lower coupler and the upper coupler, wherein the connector assembly is configured to controllable vary the stiffness of the interconnection.

In embodiments, the method comprises:

- arranging the installation tool at a mast mounting structure of the floating foundation and locking the lower coupler to the mast mounting structure,
- suspending a wind turbine from a hoisting system of a crane and moving the suspended wind turbine above the installation tool,
- setting the stiffness of the connector assembly at a low stiffness,
- mating the upper coupler with the mast foot whilst the connector assembly is set at said low stiffness,
- locking the upper coupler to the mast foot,
- gradually increasing stiffness of the connector assembly to a high stiffness so as to cause the suspended wind turbine to be brought in motion synchronized with the mast mounting structure of the floating foundation due to forces transmitted via the connector assembly,
- landing the wind turbine onto the mast mounting structure whilst maintaining the high stiffness of the connector assembly such that the wind turbine is provisionally secured to the floating foundation by means of the installation tool,
- fastening the mast foot of the wind turbine permanently to the mast mounting structure, e.g. by multiple fasteners,
- releasing the installation tool from the mast foot and the mast mounting structure.

In the context of the aspects of the present invention, preferably, the mast mounting structure and the mast foot are provided with an annular flange structure, which flange structures are

to be fastened to one another by multiple fasteners. For example, the flange structures have vertical bolt holes there through, wherein the flange structures are to be placed onto one another and bolts fitted through the aligned bolt holes and provided with nuts. In another embodiments, the flange structures and fasteners are designed as disclosed inWO2020/035770A1.Other flange connections, e.g. as disclosed in WO2018/139929A1 are also envisaged.

In the context of the aspects of the present invention, preferably, the installation of the wind turbine is done in the form of the mast and nacelle, also called TNA or tower nacelle assembly, is installed on the floating foundation without the rotor blade being present. Herein use is made of a vessel as having a crane configured and operated to handle the TNA. This vessel then sails away from the floating foundation. Another vessel then comes along and is used for the installation of the rotor blades of the wind turbine.

In preferred embodiments, installation of the rotor blades is done using a vessel and crane as disclosed in WO2023/041730A1, or in WO2022/175315A1, or using another crane that is temporarily mounted on the floating foundation, e.g. a tower crane.

A third aspect of the invention relates to a wind turbine installation crane and to a method for using such a crane.

The wind turbine installation crane according to the third aspect of the invention also relates to a crane for the assembly and installation of offshore wind turbines having a nacelle with a horizontal axis rotational hub that is arranged on top of a wind turbine mast.

The crane and the method using that crane are in particular directed towards mounting a nacelle on an upstanding wind turbine mast, and subsequently installing the mast with the nacelle on a wind turbine foundation. The crane can also be used for demounting a nacelle, and for de-installing an offshore wind turbine mast with nacelle.

In the wind industry, there is a trend towards larger wind turbines and a desire to install offshore wind turbines at locations with larger water depths than currently encountered.

Currently, the largest wind turbines are 12MW wind turbines. In the near future 15MW and even 20MW offshore wind turbines are expected.

A mast for a 15MW wind turbine may have a length of 120 meters. Such a mast may have a weight of over 1000mt, for example have a weight of 1200mt. A mast for a 20MW wind turbine may have a length of 140 meters. Such a mast may have a weight of over 1600mt, for example have a weight of 1800mt. The nacelle of a 15MW wind turbine may have a weight of about 900mt, while a 20MW nacelle may have a weight of more than1000mt for example have a weight of 1100mt.

The large size of these wind turbines makes them unfit to be transported in an assembled state. The wind turbines are too high to be efficiently transported on a vessel in an upright position. Due to the height of the mast, it is furthermore complicated to mount the components on a wind turbine foundation, in particular on a floating wind turbine foundation from a floating vessel.

In the prior art, boom type cranes are used to lift wind turbines, i.e. wind turbines up to 10 -12 MW. It is also known to use two cranes to support a wind turbine form multiple angles. Supporting the crane from multiple angles increases the stability of the wind turbine while being supported by the cranes. Furthermore, because the wight of the wind turbine is supported by multiple hoisting devices, the load of the wind turbine is supported by multiple cables.

It is an object of the third aspect of the invention to provide an alternative wind turbine installation crane. It is a further object to provide an improved crane for the installation of wind turbines, more in particular to provide a crane that enables transport and installation of large size wind turbines, i.e. wind turbines of 15MW or more, preferably with a single vessel.

It is a further object to provide a crane and a method for installing tall offshore wind turbines at sea in a fast, safe, reliable, and cost-effective manner.

This object is achieved by a method for assembling and installing an offshore wind turbine, wherein use is made of a wind turbine installation crane, the installation crane being convertible between an assembly configuration, for mounting a nacelle on an upright mast, and an installation configuration, for mounting the mast, e.g. provided with the nacelle, on a foundation, e.g. a floating foundation, the crane comprising;

- a crane base;
- a crane housing;
- a slew bearing, wherein the slew bearing is provided between the crane base and the crane housing, to enable the crane housing to slew about a vertical slew axis;

- a boom, wherein the boom extends between a base end and a head end, and wherein the boom is at the base end connected to the crane housing such as to be pivotable relative to the crane housing about a horizontal boom pivot axis;
- a jib, wherein the jib extends between a base end and a head end, and wherein the jib is at the base end connected to the boom, such as to be pivotable relative to the boom about a horizontal jib pivot axis;
- a left proximal crown block and a right crown block, respectively mounted on a left side and a right side of the top end of the boom or of the base end of the jib,
- a left distal crown block and a right distal block, respectively mounted on a left side and a right side of the top end of the jib,
- a first, second, third and fourth hoisting assembly, respectively comprising the left proximal crown block, the right proximal crown block, the left distal crown block, and the right distal crown block, for supporting a wind turbine mast from four different angles;

wherein each of the hoisting assemblies comprises a hoisting winch with an associated hoisting cable that is guided via the crown block of the respective hoisting assembly, and a load equaliser device for keeping the load in each of the hoisting cables equal while supporting a wind turbine,

wherein the jib is pivotable relative to the boom about the horizontal jib pivot axis between:
- an assembly position, in which the jib is raised position and substantially parallel to the boom, and
- an installation position, in which the jib is lowered and substantially horizonal, for installing the wind turbine on a foundation using the first, second, third and fourth hoisting assembly,

wherein, when the crane is in the assembly configuration, the boom is raised and the jib is in the assembly position, for lifting the nacelle of the wind turbine onto a top end of the mast by means of the third and fourth hoisting assemblies, and, when the crane is in the installation configuration, the boom is raised and the jib is in the installation position, for lifting the wind turbine on a foundation using the first, second, third and fourth hoisting assembly,

wherein the method comprises the following steps:

- converting the crane into the assembly configuration;
- lifting the nacelle onto a top end of the mast of the wind turbine using the third and fourth hoisting assembly
- converting the crane into the installation configuration;

- lifting the mast of the wind turbine provided with the nacelle using the first, second, third and fourth hoisting assembly;
- controlling the vertical orientation of the support wind turbine mast by means of the four hoisting assemblies;
- lowering of the wind turbine mast onto a foundation, e.g. a floating foundation, and landing the mast of the wind turbine onto the foundation;
- disconnecting the crane.

The third aspect of the invention furthermore provides a wind turbine installation crane, the installation crane being convertible between an assembly configuration, for mounting a nacelle on an upright mast, and an installation configuration, for mounting the mast, e.g. provided with the nacelle, on a foundation, e.g. a floating foundation, the crane comprising;
- a crane base;
- a crane housing;
- a slew bearing, wherein the slew bearing is provided between the crane base and the crane housing, to enable the crane housing to slew about a vertical slew axis;
- a boom, wherein the boom extends between a base end and a head end, and wherein the boom is at the base end connected to the crane housing such as to be pivotable relative to the crane housing about a horizontal boom pivot axis;
- a jib, wherein the jib extends between a base end and a head end, and wherein the jib is at the base end connected to the boom, such as to be pivotable relative to the boom about a horizontal jib pivot axis;
- a left proximal crown block and a right crown block, respectively mounted on a left side and a right side of the top end of the boom or of the base end of the jib,
- a left distal crown block and a right distal block, respectively mounted on a left side and a right side of the top end of the jib,
- a first, second, third and fourth hoisting assembly, respectively comprising the left proximal crown block, the right proximal crown block, the left distal crown block, and the right distal crown block, for supporting a wind turbine mast from four different angles;

wherein each of the hoisting assemblies comprises a hoisting winch with an associated hoisting cable that is guided via the crown block of the respective hoisting assembly, and a load equaliser device for keeping the load in each of the hoisting cables equal while supporting a wind turbine,

wherein the jib is pivotable relative to the boom about the horizontal jib pivot axis between:

- an assembly position, in which the jib is raised position and substantially parallel to the boom, and
- an installation position, in which the jib is lowered and substantially horizonal, for installing the wind turbine on a foundation using the first, second, third and fourth hoisting assembly,

wherein, when the crane is in the assembly configuration, the boom is raised and the jib is in the assembly position, for lifting the nacelle of the wind turbine onto a top end of the mast by means of the third and fourth hoisting assemblies, and, when the crane is in the installation configuration, the boom is raised and the jib is in the installation position, for lifting the wind turbine on a foundation using the first, second, third and fourth hoisting assembly.

A crane according to the third aspect of the invention is configured to support a wind turbine form multiple angles, i.e. from four angles, and is therefore able to stabile support the wind turbine, i.e. to control the vertical position of the mast, while lifting it from the vessel onto the floating foundation. This is in particular beneficial when lifting large seize wind turbines, e.g. mast for 12MW wind turbines or even for larger wind turbines.

Furthermore, with a crane according to the invention, two of the four crown blocks for supporting the wind turbine are mounted on a jib, which enables the crane to position these crown blocks above the top end of the boom, and thus to lift a nacelle on the top end of an upright standing mast of a wind turbine.

The third aspect of the invention thus provides an alternative wind turbine installation crane configured to support a wind turbine, e.g. the mast of a wind turbine, preferably the mast of a wind turbine provided with a nacelle without the blades, and to lift the wind turbine form a vessel onto a foundation.

In an embodiment of a method, the mast of the wind turbine is supported using a spreader. In such a method, the first, second, third and fourth hoisting cables are attached to a spreader, preferably an annular spreader, the spreader having a spreader body encircling the mast of the wind turbine. The spreader is supported above the centre of gravity 108 of the mast of the wind turbine via the four hoisting cables, while two or more cables, e.g. four cables, extend from the spreader to a base end of the mast of the wind turbine.
In a preferred embodiment, the angle of the four hoisting wires is such that virtually cross each other in a point at or near the bottom end of the wind turbine mast.

In addition to the hoisting wires, tugging wires may be provided, for example from tugging winches mounted on the boom of the crane. Tugging wires may be connected to the spreader and/or directly to the wind turbine, for example to the foot end of the wind turbine, to provide additional control of the position of the wind turbine mast while supporting it.

In an embodiment of the crane, the first and second crown block are mounted on the boom, at or near the top end thereof, and only the third and fourth crown block are mounted on the jib. Thus, the jib, comprising the third and fourth crown block only. This facilitates providing the jib with the assembly configuration since the first and second crown block do not need to be moved along the top of the boom.

The third aspect proposes a method for assembling and installing an offshore wind turbine, wherein use is made of a wind turbine installation crane, the installation crane being convertible between an assembly configuration, for mounting a nacelle on an upright mast, and an installation configuration, for mounting the mast, e.g. provided with the nacelle, on a foundation, e.g. a floating foundation, the crane comprising;

- a crane base;
- a crane housing;
- a slew bearing, wherein the slew bearing is provided between the crane base and the crane housing, to enable the crane housing to slew about a vertical slew axis;
- a boom, wherein the boom extends between a base end and a head end, and wherein the boom is at the base end connected to the crane housing such as to be pivotable relative to the crane housing about a horizontal boom pivot axis;
- a jib, wherein the jib extends between a base end and a head end, and wherein the jib is at the base end connected to the boom, such as to be pivotable relative to the boom about a horizontal jib pivot axis;
- a left proximal crown block and a right crown block, respectively mounted on a left side and a right side of the top end of the boom or of the base end of the jib,
- a left distal crown block and a right distal block, respectively mounted on a left side and a right side of the top end of the jib,
- a first, second, third and fourth hoisting assembly, respectively comprising the left proximal crown block, the right proximal crown block, the left distal crown block, and the right distal crown block, for supporting a wind turbine mast from four different angles;

wherein each of the hoisting assemblies comprises a hoisting winch with an associated hoisting cable that is guided via the crown block of the respective hoisting assembly, and a

load equaliser device for keeping the load in each of the hoisting cables equal while supporting a wind turbine,

wherein the jib is pivotable relative to the boom about the horizontal jib pivot axis between:

- an assembly position, in which the jib is raised position and substantially parallel to the boom, and
- an installation position, in which the jib is lowered and substantially horizonal, for installing the wind turbine on a foundation using the first, second, third and fourth hoisting assembly,

wherein, when the crane is in the assembly configuration, the boom is raised and the jib is in the assembly position, for lifting the nacelle of the wind turbine onto a top end of the mast by means of the third and fourth hoisting assemblies, and, when the crane is in the installation configuration, the boom is raised and the jib is in the installation position, for lifting the wind turbine on a foundation using the first, second, third and fourth hoisting assembly,

wherein the method comprises the following steps:

- converting the crane into the assembly configuration;
- lifting the nacelle onto a top end of the mast of the wind turbine using the third and/or the fourth hoisting assembly,
- converting the crane into the installation configuration;
- lifting the mast of the wind turbine provided with the nacelle using the first, second, third and fourth hoisting assembly;
- controlling the vertical orientation of the support wind turbine mast by means of the four hoisting assemblies;
- lowering of the wind turbine mast onto a foundation, e.g. a floating foundation, and landing the mast of the wind turbine onto the foundation;
- disconnecting the crane.

The third aspect of the invention also relates to a wind turbine installation crane, the installation crane being convertible between an assembly configuration, for mounting a nacelle on an upright mast, and an installation configuration, for mounting the mast, e.g. provided with the nacelle, on a foundation, e.g. a floating foundation, the crane comprising;

- a crane base;
- a crane housing;

- a slew bearing, wherein the slew bearing is provided between the crane base and the crane housing, to enable the crane housing to slew about a vertical slew axis;

- a boom, wherein the boom extends between a base end and a head end, and wherein the boom is at the base end connected to the crane housing such as to be pivotable relative to the crane housing about a horizontal boom pivot axis;

- a jib, wherein the jib extends between a base end and a head end, and wherein the jib is at the base end connected to the boom, such as to be pivotable relative to the boom about a horizontal jib pivot axis;

- a left proximal crown block and a right crown block, respectively mounted on a left side and a right side of the top end of the boom or of the base end of the jib,

- a left distal crown block and a right distal block, respectively mounted on a left side and a right side of the top end of the jib,

- a first, second, third and fourth hoisting assembly, respectively comprising the left proximal crown block, the right proximal crown block, the left distal crown block, and the right distal crown block, for supporting a wind turbine mast from four different angles;

wherein each of the hoisting assemblies comprises a hoisting winch with an associated hoisting cable that is guided via the crown block of the respective hoisting assembly, and a load equaliser device for keeping the load in each of the hoisting cables equal while supporting a wind turbine,

wherein the jib is pivotable relative to the boom about the horizontal jib pivot axis between:

- an assembly position, in which the jib is raised position and substantially parallel to the boom, and

- an installation position, in which the jib is lowered and substantially horizonal, for installing the wind turbine on a foundation using the first, second, third and fourth hoisting assembly,

wherein, when the crane is in the assembly configuration, the boom is raised and the jib is in the assembly position, for lifting the nacelle of the wind turbine onto a top end of the mast by means of the third and fourth hoisting assemblies, and, when the crane is in the installation configuration, the boom is raised and the jib is in the installation position, for lifting the wind turbine on a foundation using the first, second, third and fourth hoisting assembly.

Preferably, the vessel and/or crane of the third aspect of the invention are used in the context of the first and/or second aspect of the invention.

The invention will now be discussed with reference to the drawings. In the drawings:
- fig. 1 shows a vessel with a crane according to the invention while assembly of the nacelle onto the top of the mast of the wind turbine is carried out on deck of the vessel,
- fig. 2 shows the vessel of figure 1 during installation of the wind turbine on a floating foundation,
- fig. 3 shows the vessel of figure 2 in perspective view from above during the installation of the wind turbine on the floating foundation,
- fig. 4 shows an example of the installation tool according to the invention,
- fig. 5 shows the installation tool of figure 4 mounted to the outer ends of a pair of cantilevered arms of the motion suppressor device of the vessel of figure 2,
- fig. 6 shows from above the motion suppressor device and installation tool mounted on the hull of the vessel,
- fig. 7 shows the motion suppressor device and installation tool mounted on the hull of the vessel of figure 6 from the side,
- figs. 8, 9 show the motion suppressor device and installation tool of figures 6, 7 illustrating Z-axis motion of the installation tool relative to the cantilevered arms,
- figs. 10a-g illustrate the method for installation of a wind turbine on a floating foundation according to the invention,
- fig. 11 illustrates the motion suppressor device installation device according to the invention cooperating with the floating foundation and the mast foot.
- figs. 12a-b illustrate the mating of the upper coupler with the mast foot,
- figs. 13a-g illustrate the operation of the installation tool according to the invention,

In the figures reference numeral 1 denotes a vessel, here a semi-submersible vessel, for installation of a wind turbine 100 on a floating foundation 200 that is in floating condition and subject to sea-state induced motions, e.g. at the site of an offshore windfarm.

The wind turbine 100 to be installed here is embodied as a TNA and is composed of a wind turbine mast 101 having a mast foot 102 and a mast top and also of a nacelle 110 which is mounted on the mast top 103, preferably without any rotor blades.

In figure 1 the act of mounting the nacelle 110 on the mast 101 is depicted.

The floating foundation 200 here has three interconnected and buoyant stabilizing columns 201 interconnected by beams in a triangular arrangement, e.g. an equilateral triangle, when seen from above.

For example, the floating foundation 200, e.g. each buoyant column 201 thereof, is provided with one or more ballast tanks for containing a ballast, here ballast water. In an embodiment, a ballast control system is provided which is configured for moving the ballast liquid between ballast tanks, e.g. of the at least three stabilizing columns.

One of the stabilizing columns 201 of the floating foundation is embodied with a mast mounting structure 210 which is configured to mount the mast 101 of the wind turbine 100 thereon.

In an embodiment, the floating foundation 200 comprises one or more water-entrapment plates, e.g. each of the plates being attached to a lower end of one of the stabilizing columns.

The mast mounting structure 210 is configured to mount the mast 101 of the wind turbine thereon and fasten the mast foot to the mast mounting structure. The mast mounting structure has an upwardly directed mounting axis.

In this example, the mast mounting structure 210 and the mast foot 102 are each provided with an annular flange structure, which flange structures are to be fastened to one another by multiple fasteners, e.g. bolts that are to be fitted through aligned bolt holes in the flanges and to be secured by nuts.

The vessel 1 comprises:

- a floating hull 10,
- a crane 50 arranged on the hull, wherein the crane 50 is provided with a hoisting system comprising winch driven hoist cables that is adapted to support the weight of the wind turbine 100 and suspend the wind turbine from the hoist cables, which hoisting system is adapted to raise and lower the wind turbine in a controllable manner.

The crane 50 is embodied to the third aspect of the invention.

The crane 50 comprises:

- a crane base 51,
- a crane housing 52,
- a slew bearing, wherein the slew bearing is provided between the crane base and the crane housing, to enable the crane housing to slew about a vertical slew axis;

- a boom 53, wherein the boom extends between a base end and a head end, and wherein the boom is at the base end connected to the crane housing such as to be pivotable relative to the crane housing about a horizontal boom pivot axis;
- a jib 54, wherein the jib extends between a base end and a head end, and wherein the jib is at the base end connected to the boom, such as to be pivotable relative to the boom about a horizontal jib pivot axis;
- a left proximal crown block 55 and a right proximal crown block 56, respectively mounted on a left side and a right side of the top end of the boom or of the base end of the jib,
- a left distal crown block 57 and a right distal block 58, respectively mounted on a left side and a right side of the top end of the jib,
- a first, second, third and fourth hoisting assembly 61, 62, 63, 64, respectively comprising the left proximal crown block, the right proximal crown block, the left distal crown block, and the right distal crown block, for supporting a wind turbine mast 101 from four different angles.

The crane 50 according is configured to support a wind turbine 100 from multiple angles, i.e. from four angles, and is therefore able to stabile support the wind turbine, i.e. to control the vertical position of the mast 101, while lifting it from the vessel 1 onto the floating foundation 200. This is in particular beneficial when lifting large size wind turbines, e.g. mast for 12MW wind turbines or even for larger wind turbines.

Each of the hoisting assemblies 61, 62, 63, 64 comprises a hoisting winch with an associated hoisting cable that is guided via the crown block 56, 57, 58, 59 of the respective hoisting assembly, and a load equaliser device for keeping the load in each of the hoisting cables equal while supporting the wind turbine 100.

In embodiments, the winches of the hoisting assemblies 61, 62, 63, 64 can be operated in a constant tension mode, e.g. to uniformly support a part of the weight of the wind turbine, e.g. when already connected to the installation tool 300 discussed below.

The jib 54 of the crane 50 is pivotable relative to the boom 53 about the horizontal jib pivot axis between an assembly position and an installation position.

The crane 50 is convertible between an assembly configuration and an installation configuration.

Figure 1 shows the crane 50 in the assembly configuration, for mounting a nacelle 110 on a upright mast 101. In the assembly configuration the boom 53 is raised and the jib 54 is in the

assembly position, the jib is in a raised positioned, e.g. substantially parallel to and away from the boom 53.

The nacelle 110 is lifted upon the upright mast 101 using the third and fourth lifting assembly 63,64 which extend from the left and right crown block 57,58 at the top end from the jib.

Figures 2 and 3 show the crane 50 in the installation configuration, for installing the wind turbine 100, including the nacelle 110, on the floating foundation 200. In the installation configuration the boom 53 is raised and the jib 54 is in installation position. The jib is lowered relative to the assembly position and is substantially horizontal. The wind turbine is lifted onto the floating foundation using the first, second, third and fourth hoisting assemblies 61, 62, 63, 64 together.

The mast 101 of the wind turbine 100 is supported using a spreader 105.

The first, second, third and fourth hoisting cables 61, 62, 63, 64 are attached to the spreader, here shown as an annular spreader.

The spreader has a spreader body encircling the mast of the wind turbine. For example, the spreader body includes a substantially c-shaped body part and further comprises a door 107 which can be closed and opened to engage and disengage the mast of the wind turbine.

The spreader 105 is supported above the centre of gravity 108 of the mast of the wind turbine via the four hoisting cables, while four extension cables 106 extend from the spreader 105 to a foot end 102 of the mast of the wind turbine.

The angle of the four hoisting cables 61 – 64 and their extensions 106 is such that they virtually cross each other in a point at or near the foot 102 of the wind turbine 100.

In an embodiment not shown, tugging wires may be provided in addition to the hoisting wires, for example from tugging winches mounted on the boom 53 of the crane 50. Tugging wires may be connected to the spreader 105 and/or directly to the wind turbine 100, for example also to the mast foot 102 of the wind turbine, to provide additional control of the position of the wind turbine mast 101 while supporting it from the crane 50.

The first and second crown blocks 55, 56 are mounted on the boom 53, at the top end thereof, and the third and fourth crown blocks 57,58 are mounted on the jib 54. Thus, the jib,

comprising the third and fourth crown block only. Generally, seen from above, the four crown blocks are at four points with the nacelle 110 within these four points so that the nacelle does not interfere with the cables.

The crane 50 of the vessel 1 and/or the hoisting system, e.g. the winches, may comprise a heave compensation device but as the inventive method provides for suppression of Z-axis relative motion between the mast mounting structure 210 and the vessel, the use thereof is not necessary in the process of installation of the wind turbine, or is of limited relevance. Heave compensation devices are well known in the art, both in passive and active embodiments or hybrids thereof.

Figure 1 shows the crane 50 in the assembly configuration thereof, were the boom is 53 is raised and jib 54 is in the assembly position. The wind turbine mast 101 is in a upright position on the deck of the vessel 1. The nacelle 110 is lifted onto a top end 103 of the mast of the wind turbine using the third and/or fourth hoisting assemblies 63, 64 having third and fourth crown blocks 57,58 mounted on the jib 54. The nacelle 110 is then connected to the top end 102 of the mast of the wind turbine and the crane 50 is converted into the installation configuration.

Figures 2 and 3 show the crane 50 in the installation configuration with the boom 53 raised and the jib 54 in the substantially horizontal installation position. Herein the jib 54 extends above and over the nacelle 110. The wind turbine 100, which includes the mast 101 of the wind turbine 100 and the nacelle 110, so forming a so-called TNA, is lifted using the first, second, third and fourth hoisting assemblies 61, 62, 63, 64 together.

In the shown embodiment, the first, second, third and fourth hoisting cables 61, 62, 63, 64 are attached to a spreader 105. The spreader is supported above the centre of gravity 108 of the mast of the wind turbine via the four hoisting cables, while four cables 106, extend from the spreader to the foot end of the mast of the wind turbine 102. The vertical orientation of the wind turbine mast 100 is controlled by means of the four hoisting assemblies 61, 62, 63, 64, which also lower the wind turbine toward the floating foundation 200.

The spreader 105 engages on the mast 101, e.g. via rollers, pads, and/or other mast engagement members.

The wind turbine 100 is lowered until the wind turbine lands on the mast mating structure 210 of the floating foundation 200. The crane 50 is then disconnected from the wind turbine.

In figure 3 the vessel 1 is provided with a motion suppressor device 70 which is mounted to the hull 10 of the vessel.

The motion suppressor device 70 here is provided at the stern on the longitudinal axis of the vessel. The crane 50 is also provided on the stern of the vessel. Other arrangement on-board the vessel 1 are also envisaged, e.g. the device 70 at a corner of the stern and the crane 50 at the opposite corner of the stern, or the device 70 and crane along a side of the vessel, etc. Yet the arrangement of device 70 at the stern on the longitudinal axis of the vessel is preferred in view of reduction of relative motion, e.g. when the vessel is a semi-submersible vessel. For a monohull vessel, arranging the device 70 and crane along a side may be preferred.

The vessel 1 is arranged, e.g. using the dynamic positioning system of the vessel 1, in vicinity of the floating foundation 200 allowing the crane 50 to position the wind turbine 100 above the mast mounting structure 210.

Generally, sea-state induces relative motion between the floating foundation 200 and the hull 10 of the vessel 1 in horizontal X- axis and Y- axis directions, in vertical Z-as axis direction, and in rotational directions about the horizontal X- axis and Y- axis and about the vertical Z-axis. The relative motions of the floating wind turbine and the hull of the vessel may be several meters in each of X, Y, and Z-axis direction, as well as 1 degree or more of rotational motion about any of the X, Y, and Z-axis.

The motion suppressor device 70 comprises motion actuators 80 configured for causing movement of the motion suppressor device 70 in the horizontal plane relative to the hull 10 of the vessel 1, e.g. the motion actuators 80 being rack and pinion drives. Preferably, X-axis motion actuators 80 as well as Y-axis motion actuators 80 are present to control motion in said directions relative to the hull.

For example, in practical embodiments, motion actuators 80 allow for motion in X-axis and in Y-axis direction in a range between 5 and 10 meters, e.g. about 8 meters.

The motion suppressor device 70 is configured to control motion of the mast mounting structure 210 in the X-axis direction and in the Y-axis direction, whilst suppressing motion in the Z-axis direction, the motion suppressor device being rigid in Z-axis direction relative to the hull of the vessel 1. For example, the motion suppressor device is configured to dampen motion of the mast mounting structure in the X-axis direction and in the Y-axis direction. A dampened motion of the mast mounting structure in the X-axis direction and in the Y-axis direction provided by the motion suppressor device is preferred in order to avoid excessive

loads, e.g. on the hull of the vessel 1 and/or the floating foundation 200. Such excessive forces are, e.g. to be expected when a fully rigid connection would be established between the floating foundation and the vessel.

The motion suppressor device 70 comprises a pair of cantilevered arms 75, wherein an inner end of each cantilevered arm 75 is connected to the hull. The cantilevered arms 75 each project outward from the hull of the vessel 10 and are configured to absorb the upward force exerted by the increased buoyancy of the floating foundation 200 so as to suppress relative Z-axis motion. It will be appreciated that the arms 75 will on practice be very significant, e.g. as the upward force may well be more than 1000 tonnes exerted at the outer end of the arms 75.

The vessel 1 is further provided with an installation tool 300, in the shown embodiment the installation tool is mounted on the motion suppressor device 70. The installation tool 300 here is configured to establish the engagement between the motion suppressor device 70, here the arms 75 thereof, and the floating foundation 200.

The figures 4 - 9 show the motion suppressor device 70 and installation 300 in more detail.

The installation tool 300 comprises a lower coupler 310 and an upper coupler 320. The lower coupler is configured to couple to the mast mounting structure 210. The upper coupler is configured to couple to the mast foot 102. The installation tool further comprises a multi-degrees of freedom, here six-degrees of freedom, connector assembly 350 having a controllable stiffness, which connector assembly 350 interconnects the lower coupler 310 and the upper coupler 320. The connector assembly 350 is configured to controllable vary the stiffness of the interconnection.

The installation tool 300 is mounted between the pair of cantilevered arms 75 of the motion suppressor device 70, here the lower coupler 310 being connected to outer ends of the cantilevered arms 75.

The connector assembly 350 of the installation tool comprises multiple hydraulic cylinders 360 arranged to allow for setting of stiffness of the connector assembly in said multi-degrees of freedom, here six degrees of freedom. Setting of the stiffness of the connector assembly is done by setting of the pressure in the multiple hydraulic cylinders 360. For example, pressure is varied from 25 bar at the low stiffness setting to 150 bar at an intermediate stiffness setting, to 300 bar at the high stiffness setting.

In the shown embodiment, each of the lower coupler 310 and the upper coupler 320 comprises a C-shaped main body and a pivotal door member 315 configured to move between an opened and closed position thereof, so that in the closed position the coupler

forms an annulus, and the opened position allowing removal of the installation tool after completion of the wind turbine installation. Mating the lower coupler with the floating foundation, e.g. the mast mounting structure thereof, may be done from above with the door closed so that the coupler form an annulus. Mating the upper coupler with the mast foot may also be done with the door thereof closed.

The connector assembly of the installation tool 300 preferably comprises multiple double sided hydraulic cylinders 360, shown schematically in Figures 4 -9, each having a cylinder body and having a piston rod extending through opposed axial ends of the cylinder body, wherein a piston on the piston rod delimits equal cross-section chambers in the cylinder body. Herein, a controllable throttle bypass may be provided between the chambers of each cylinder.

The lower and upper couplers 310, 320 have dimensions to accommodate therein the mast mounting structure 210 and mast foot 102, respectively, of a diameter of at least 8 meters, e.g. of diameter between 8 and 15 meters. This means that the couplers 310, 320 are very significant is size, also taking into account the loads to which the couplers 310, 320 are subjected during the installation of the wind turbine 100. In this regard, the couplers 310, 320 have door actuators 370, e.g. hydraulic cylinders, configured to selectively open and close the doors 315 thereof.

For mating of the couplers 310, 320 as well as for locking of the couplers to the mast mounting structure 210 and mast foot 102, respectively, the couplers will - in practical embodiments - each comprise one or more actuable components, e.g. hydraulically driven components. For example, the installation tool comprises a power pack, e.g. including a hydraulic power unit, for driving the actuable components.

In an embodiment, the lower coupler 310 is connected to the motion suppressor device 70 in a gimballing manner about the X-axis and the Y-axis, for example freely gimballing about said X, Y - axes.

The lower coupler 310 is displaceable in Z-axis direction relative to the motion suppressor device 70, here by one or more Z-axis motion actuators 342, 343, here in a controllable manner. For example, the one or more Z-axis motion actuators 342, 343 are configured and operated to vary the stiffness and/or the damping thereof. For example, the one or more Z-axis motion actuators 342, 343 are configured and operated to provide for control of vertical position of the lower coupler 310 relative to the motion suppressor device, here relative to the arms 75.

Figures 8 and 9 show that the lower coupler 310 is mounted to the motion suppressor device 70 via a Z-axis motion mechanism 340 that is configured to control motion of the installation tool relative to the motion suppressor device. The Z-axis motion mechanism is configured to provide for controlled variation of vertical stiffness of the Z-axis motion mechanism.

In embodiments, the Z-axis motion mechanism comprises lever actuators 342, e.g. hydraulic cylinders, which are connected at one end to a respective cantilever arm 75 and at the other end connected to a lever 341. Each lever 341 is pivotably connected to the outer end of the respective cantilevered arm 75 and to the lower coupler 310, such that when the lever actuators 342 extend or retract the lower coupler 310 is moved in Z-direction with respect to the motion suppressor device 70.

The Z-axis motion mechanism here, as preferred, further comprises one or more rod actuators 343, e.g. hydraulic cylinders, which is/are at one end pivotably connected to the cantilever arm 75 and at the other end pivotably connected to a rod 344. The rod 344 is further fastened to the lower coupler 310, such that when the lower coupler is moved in the Z-direction with respect to the motion suppressor device 70 the lower coupler 310 will substantially horizontal.

In an embodiment, the motion suppressor device 70 comprises a motion control unit controlling the motion actuators 80 thereof. For example, the motion control unit is configured to provide a damping mode in which the motion actuators 80 dampen motion of the motion suppressor device 70 relative to the hull 10 in the horizontal plane relative to the hull of the vessel 1. For example, electric motors driving the pinions of a rack and pinion drive are used to brake motion of the device 70 in horizontal direction(s) relative to the hull, e.g. electricity generated during damping being stored in an energy storage device, e.g. in a supercapacitor.

In an embodiment, a monitoring system is provided which is configured and operated to monitor position and/or motion of a portion of the floating foundation 200 on which motion suppressor device 70 engages, e.g. the mast mounting structure, e.g. via the lower coupler 310 of the installation tool. For example, the monitoring system is linked to the motion control unit of the motion actuators 80 of the motion suppressor device 70.

In embodiments, the monitoring system is, linked to the motion control unit of the motion actuators of the motion suppressor device. In an embodiment, the motion control unit is configured to provide a follow mode that is used in the routine of engaging the motion suppressor device 300 with the floating foundation 200, wherein – based on signals provided by the monitoring system - the motion actuators 80 of the motion suppressor device 70 are actively driven to synchronize and line-up the engaging portion of motion suppressor device relative to the portion of the floating foundation on which motion suppressor device engages,

e.g. the mast mounting structure 210. In another routine, the motion control unit provides for a damping mode, wherein – based on signals provided by the monitoring system - the motion actuators 80 of the motion suppressor device 70 are actively driven to dampen relative motion in the horizontal plane.

Figures 10a-g schematically show the different steps of the installation of a wind turbine 100 on the floating foundation 200.

The figures 10a-g show only the stern section of the semi-submersible vessel 1 and only a part of the floating foundation 200.

Figure 10a shows the step of arranging the vessel 1 near one of the buoyant columns 201 of the floating foundation 200, allowing the crane 50 to position the wind turbine 100 above the mast mounting structure 210.

For example, the vessel 1 uses its DP-system to maintain its position and heading.

In embodiments, the foundation 200 is moored via anchor lines.

In embodiments, the motion suppressor device 70 is retracted, here in direction of the longitudinal axis of the vessel 1, during approach of the foundation 200.

For example, the relative motion between the vessel 1 and the mast mounting structure may be:

- motion in X-direction and in Y-direction ± 3m,
- motion in Z-direction ± 3m,
- Rotational degrees of freedom:
  - Rx > 1.5 deg
  - Ry > 2.6 deg
  - Rz > 1 deg

Figure 10b shows the motion suppressor device 70 engaged with the mast mounting structure 210 of the floating foundation 200. This may involve extending the suppressor device 70 outward from the vessel hull, so that the tool 300 is brought in close proximity of the structure 210 and then the lower coupler 310 is engaged with the structure 210. The engagement of the lower coupler 310 may include the mating and locking steps as disclosed herein.

Once the suppressor device 70 is engaged with the foundation, in a step of the installation method, the buoyance of the floating foundation is increased, here by de-ballasting the floating foundation 200, e.g. by pumping ballast water from the floating foundation 200 into one or more ballast tanks of the vessel 1. In practice, for example, more than 1000 tonnes of water is pumped from the foundation 200 to tanks in the vessel, which may take several hours to complete.

The engagement of the foundation 200 with the motion suppressor device 70 counters the rise of the floating foundation 200 caused by the increase of buoyancy, thereby the motion suppressor device 70 suppresses at least Z-axis motion of the floating foundation 200 relative to the hull 10 of the vessel.

Preferably, the buoyant force of the floating foundation 200 suppressed by the motion suppressor device 70 is at least 50%, e.g. at least 75%, e.g. about the same as, of the weight of the wind turbine 100, so here of the mast 101 and the nacelle 110 combined. As will be appreciated, this is of relevance in view of the later placing of the wind turbine 100 on the mast mounting structure 210 as then the extra load on the foundation is, at least in part, preferably entirely, absorbed by the increased buoyant force. In embodiments, the extra buoyant force is chosen to be more than the weight of the wind turbine, so that even after placing of the wind turbine on the mast mounting structure 210 an effective upward force of the foundation remains which is countered by the device 70.

For example, the increased buoyancy is selected to fully offset the weight of the wind turbine 100 that is to be landed, e.g. the TNA, on the structure 210, e.g. so that the landing does not result in any undue change in draft and/or trim of the foundation.

The relative Z-motion between the vessel 1 and the floating foundation 200 is suppressed prior to the process of mounting of the wind turbine 100 on the mast mounting structure 210. Basically, the vessel 1 and foundation 200 are in a sense coupled in Z-direction due to the increased buoyancy of the floating foundation 200 being counteracted by the motion suppressor device 70 which is mounted to the hull of the vessel.

For example, in practice, relative Z-motion is now reduced to ±0.5m.

As discussed, the suppressor device 70, in embodiments, may be operated in damping mode for horizontal motions. In this mode, some relative horizontal motion is allowed by the

actuators 80, yet in a damping mode. For example, in practice, relative X,Y motion is ±0.6m at this stage.

Figure 10c shows the wind turbine 100 suspended from the hoisting system of the crane 50. The crane 50 is operated so that the wind turbine is suspended above the installation tool 300. The lower coupler 310 of the installation tool 300 is engaged with the mast mounting structure 210 of the floating foundation. The stiffness of the connector assembly 350 of the installation tool 300 is set to a low stiffness.

In figure 10d the upper coupler 320 of the installation tool 300 is mated with and locked onto the mast foot 102. The stiffness of the connector assembly 350 is still set to a low stiffness. This low stiffness setting, in practice, will allow for the upper coupler 320 to float relative to the lower coupler 310 which is already locked to the mast mounting structure 210. At this stage, the wind turbine 100 is suspended from the hoisting system of the crane 50 above the mast mounting structure 210, and will be subject to motion that is primarily caused by sea state induced motions of the vessel 1 and/or by wind forces, etc. For example, the wind turbine may exhibit a pendulum motion.

In embodiments, one or more tugger lines and associated tugger winches of the vessel 1, e.g. on the crane 50, are employed to reduce pendulum motion of the wind turbine 100.

In embodiments, as preferred, also during this stage of engagement with the mast foot 102, the suppressor device 70, may be operated in damping mode for horizontal motions. In this mode, some relative horizontal motion is allowed by the actuators 80, yet in a damping mode. For example, in practice, relative X,Y motion is ±0.6m at this stage. Operation in damping mode horizontally may allow for limitation of the forces on the device 70.

Once the upper coupler 320 is engaged completely with the mast foot 102, the stiffness of the connector assembly 350 is gradually increased to a high stiffness, which includes doing so in a stepwise manner, so that the floating foundation 200 and the wind turbine 100 become more and more rigidly connected to one another. This causes the suspended wind turbine 100 to be brought in a motion which is synchronized with the mast mounting structure 210 of the floating foundation due to forces transmitted via the connector assembly 350. The synchronisation facilitates the subsequent landing of the wind turbine onto the mast mounting structure. Or, in other words, the installation tool 300 ensures equal motion of the mast mounting structure 210 and the mast foot 102 prior to landing of the wind turbine.

The tool 300 is operated to cause the flange structures on the mast mounting structure 210 and on the mast foot 102 to be brought into parallel arrangement to one another and kept in such parallel arrangement prior to landing. Due to the suppression of relative Z-motion by the motion suppressor device 70 as explained, the will be no, or limited, relative Z-displacement between the parallel arranged flange structures at this stage. Once this situation is reached, the wind turbine 100 can be landed by operating the hoisting system of the crane 50, with the flange structures remaining parallel to one another.

Figures 10e shows the step of landing the wind turbine 100 onto the mast mounting structure 210 of the floating foundation 200. The stiffness of the connector assembly 350 is still high. The installation tool 300 now acts to provisionally secure the wind turbine 100 to the floating foundation. The mast foot 102 of the wind turbine 100 is then permanently fastened to the mast mounting structure 210, e.g. by multiple fasteners, e.g. bolts being mounted through aligned bolt holes in the flanges of the structure 210 and the mast foot 102. In embodiments, during this stage, the couplers 310, 320 are also locked mechanically to one another in addition to being held by the stiffness of the connector assembly 350.

Figure 10f shows the crane being disconnected from the hoisting system of the crane 50. The upper coupler 320 is still coupled to the mast foot 102 and the lower coupler 310 is still connected to the mast mounting structure 210 of the floating foundation 200. The full weight of the wind turbine 100 is absorbed by the floating foundation. The increased buoyancy of the floating foundation acts to absorb the added weight of the wind turbine, at least in part, preferably the majority of the added weight, e.g. all of the added weight. This reliefs the suppressor device 70 in part or entirely from the upward force initially caused by the increased buoyancy. Disengagement of the crane 50 from the wind turbine 100 may even be done prior to the permanent fastening of the mast 101 onto the structure 210 being done, as the wind turbine is sufficiently held by the tool 300, the couplers 310, 320 possibly also being locked mechanically to one another in addition to being held by the stiffness of the connector assembly 350. Clearly, the suppressor device 70 remains in operative condition during the permanent fastening of the wind turbine 100.

Figure 10g shows that, after completion of the permanent fastening, the installation tool 300 is disconnected from the wind turbine 100 and from the floating foundation 200, allowing for use in the installation of a further wind turbine on another floating foundation.

In embodiments, the weight of the wind turbine 100 that is landed on the mast mounting structure 210 is more than 1000 tonnes, e.g. more than 2000 tonnes. For example, the mast

101 weighs about 1200 tonnes and a nacelle 110 mounted thereon weighs 1000 tonnes. For example, the wind turbine 100 to be landed on the foundation 200, without rotor blades, has a weight of 2340 tonnes, e.g. for a 15 MW wind turbine.

In an embodiment, the floating foundation 200 is anchored via anchoring lines, e.g. catenary anchoring lines, and the vessel 1 is held in position by means of a dynamic positioning system (DP system) of the vessel.

Figure 11 shows the upper coupler 320 of the installation tool 300 being engaged with the mast foot 102 of the wind turbine and the lower coupler 310 being engaged with the mast mating structure 210 of the floating foundation 200.

In embodiments, as shown, the mast mounting structure 210 comprises one or more rigid brackets 215, e.g. an annular rigid bracket 205, which here extend(s) outward of the cylindrical portion 206 on which the mast 101 is secured. The bracket(s) 215 is/are configured to be engaged by the suppressor device 70, here via the lower coupler 310 of the tool 300, here the lower coupler 310 resting on the bracket(s) 215. This implies that the bracket(s) is/are embodied to handle the increased buoyancy force in the inventive installation method.

In embodiments, as shown, the lower coupler 310 comprises a mating and locking mechanism 316 for mating with and locking to the mast mounting structure 210. For example, as shown, the mechanism 316 comprises rollers that are urged against the structure 210 by hydraulic cylinders. Initially, the stiffness of the mating mechanism, e.g. of these cylinders is low, so that – with the coupler 310 resting on the bracket(s) 215 - the structure 210 can still move in horizontal directions within the coupler 310. Then the stiffness is increased, so that the horizontal motion of the structure 210 relative to the coupler 310 becomes restrained. Preferably, in this process the structure 210 is centered within the coupler 310. In the locking phase that follows the mating phase, one or more locking members, e.g. driven by respective hydraulic cylinders, are made to lock onto the mast mounting structure 210 is that the structure 210 and coupler 310 are fixed to one another.

In embodiments, the structure 210 and/or the mast foot 102 have an external flange, wherein the locking members are configured to engage on the external flange.

In embodiments, as shown, the upper coupler 320 comprises an operable mating mechanism 380 for mating with the mast foot 102. An operable locking mechanism 385 of the upper coupler 320 is provided for locking onto the mast foot 102 once the mating phase has been completed.

The mating mechanism 380 is configured to initially engage on the mast foot 102 with a low stiffness and to gradually increase said stiffness so that the upper coupler becomes synchronized with the mast foot in the horizontal directions, prior to the upper coupler being locked, i.e. rigidly coupled, to the mast foot completing the mating step.

For example, as shown, the mating mechanism 380 comprises rollers that are urged against the mast foot 102 by hydraulic cylinders. Initially, the stiffness of the mating mechanism, e.g. of these cylinders is low, so that the foot 102 can still move in horizontal directions within the coupler 320. Then the stiffness is increased, so that the horizontal motion of the mast foot 102 relative to the coupler 320 becomes restrained. Preferably, in this process the mast foot 102 is centered within the coupler 320. As this mating is done with the connector assembly 350 at a low stiffness, the coupler 320 will now start to move as one with the mast foot 102 relative to the lower coupler 310.

Once the mating with the mast foot 102 has been completed, the locking mechanism 385 is operated to mechanically lock the mast foot 102 relative to the upper coupler 320.

The installation tool 300 further may have latching members configured and operated to latch the couplers 310, 320 directly mechanically to one another once the landing of the wind turbine on the structure 210 has been completed. The latching members may assist in keeping the wind turbine provisionally connected to the floating foundation.

In an embodiment, the installation tool 300 includes cooperating landing guide members that become operational during the landing of the wind turbine on the mast mounting structure, e.g. one or more vertical guide pillars 391 on one of the couplers entering into guide holes 392 on the other coupler.

In an embodiment, the installation tool 300 is configured and/or operated to provide for controlled rotation of the locked mast 101 about the mounting axis, e.g. in view of alignment of holes in the flange structures that are to be secured by fasteners, e.g. by bolts. This may, in practice, involve only a minor angular motion as the flanges will have a multitude of such holes, so that a small angular correction will suffice to align these holes. For example, the assembly 350 allows for such angular correction to be performed.

Figures 12a-c illustrate schematically the mating and locking of the upper coupler 320 with the mast foot 102 of the wind turbine 100, wherein the lower coupler 310 is already engaged with and locked to the structure 210.

The upper coupler 320 is provided with the operable mating mechanism 380 and the locking mechanism 385.

Figure 12a shows the first stage of the mating of the upper coupler 320 with the mast foot 102. Here the operable mating mechanism 380 is engaged with the mast foot 102 at a low stiffness setting in horizontal direction. The low stiffness of the operable mating mechanism allows for movement of the wind turbine in the horizontal plane within the coupler 320.

Figure 12b shows the following step of the mating of the upper coupler 320 with the mast foot of the wind turbine 100. The operable mating mechanism 380 has an increased stiffness which substantially restricts the movement of the wind turbine in the horizontal plane relative to the coupler 320.

Figure 12c shows the last step of the mating and locking of the upper coupler 320 with the mast foot of the wind turbine 100. The operable mating mechanism 380 still has the increased stiffness which substantially restricts the movement of the wind turbine in the horizontal plane. The locking mechanism 385 is now operated, so that all relative motion of the mast foot 102 relative to the coupler 320 is blocked.

During the process of figures 12a – c the connector assembly 350 (not shown in figures 12a-c) is at a low stiffness setting, so that the coupler 320 can effectively float relative to the lower coupler 310. Only once, the mating and locking of the upper coupler 320 is completed the stiffness of the assembly 350 is increased.

Figures 13a-g show the different steps of the installation of a wind turbine 100 on a floating foundation 200.

Figure 13a shows the floating foundation 200, the floating foundation has a mast matting structure 210 configured to mate with the mast foot of a wind turbine.

Figure 13b shows the lower coupler of 310 of the installation tool 300 engaged with the mast mating structure 210 of floating foundation 200. The installation tool is mounted on the motion suppressor device 70 and further comprises an upper coupler 320 and an operable mating mechanism 380. After this step of the installation method the buoyance of the floating foundation is increased, here by de-ballasting the floating foundation. The engagement with the motion suppressor device 70 counters the rise of the floating foundation caused by the increase of buoyancy, thereby the motion suppressor device suppressing at least Z-axis motion of the floating foundation relative to the hull of the vessel.

Figure 13c shows that the wind turbine 100 is lifted by operating the first, second, third and fourth hoisting assembly of the crane 50 in unison.

The first, second, third and fourth hoisting cables 61, 62, 63, 64 are attached to a spreader 105. The spreader 105 is supported above the centre of gravity 108 of the mast of the wind turbine, e.g. between 3 and 7 meters, via the four hoisting cables, while four extension cables 106 extend from the spreader to the mast foot 102 of the wind turbine 101.

The mast foot 102 may be embodied as a mast foot component that is joined, e.g. via a flange connection, to the tubular structure of the mast 101. The mast foot component may comprise lifting eyes, e.g. for connection to the four cables/extension cables, as well as a lower flange for connection to the structure 210. The specific component may also have one or more formations for interaction with the upper coupler 320.

Figure 13d show the mast foot 102 of the wind turbine 100 engaged by the operable mating mechanism 380 of the installation tool 300. The stiffness of the operable mating mechanism 380 is gradually increased such that the upper coupler 320 becomes synchronized with the mast foot, prior to the upper coupler being locked, i.e. rigidly coupled, to the mast foot completing the mating and locking steps.

Figure 13e shows the mast foot of the wind turbine locked to the upper coupler 320. At this stage the connector assembly 350 of the installation tool 300 has a low stiffness, such that the upper coupler 320, which is locked to the mast foot, can move with respect to the lower coupler 310 and the floating foundation 200. The wind turbine suspended from the crane 50 can now still move in multiple degrees of freedom, e.g. including rotations, e.g. a couple of degrees, with respect to the floating foundation.

Figure 13f shows the following step of the installation method. The stiffness of the connector assembly 350 of the installation tool 300 is gradually increased such that the movement of the wind turbine 101, at least the foot 102 thereof, and of the structure 210 of the floating foundation become synchronous. Also the connector assembly 350 is operated so that the mast 101 becomes aligned with the mounting axis of the structure 210, so centered relative to this axis. This causes the flanges, when present, on the structure 210 and on the mast foot 102 to become parallel to one another, preferably also with holes therein (when present) being aligned in vertical direction.

Figure 13g shows a later step of the installation method, the crane 50 is operated to lower the wind turbine 100 onto the mast mounting structure 210, e.g. so that the flanges contact one another and the weight of the wind turbine rests (at least in part) on the floating foundation. The tool 300 is still at high stiffness. As preferred, the landing entails that pins 319 enter into holes 392. Also, as preferred, a mechanical locking between the couplers 310 and 320 is effected upon the landing of the wind turbine being completed. Landing may benefit from coordinated operation of the actuators 80 of the device 70, e.g. suppressing or damping relative motion of the mast mounting structure 210 in horizontal direction(s) at least during the landing phase of the installation method.

Now the final securing of the mast foot 102 to the structure 210 is performed, e.g. by fastening of bolts that are mounted through bolt holes in the flanges as is known in the art or some other fastening arrangement.

The crane 50 is, in embodiments, release from the wind turbine, e.g. as soon as landing and provisional securing of the wind turbine 100 has been carried out. This has the benefit that the crane 50 is no longer connected to the wind turbine, e.g. allowing for the vessel 1 to be distanced from the foundation further than during the installation process.

During the final securing step, the tool 300 is in place between the foundation 200 and the wind turbine 101.As shown, the suppressor device 70 still suppresses vertical motion, and also may still act to suppress motion in horizontal directions and vertical direction. Yet, some horizontal motion could be allowed for, e.g. with the actuators 80 in a damping mode.

Once final securing has been completed, the upper coupler 320 is released from the mast foot 102 and the lower coupler 310 is released from the structure 210, e.g. including opening of the respective doors of the couplers 310, 320. Then the actuators of the device 70 are operated to clear the tool 300 from the mast and structure 210.

CLAIMS

1. Method for installation of a wind turbine (100) on a floating foundation (200) that is in floating condition and subject to sea-state induced motions, e.g. at the site of an offshore windfarm, wherein the wind turbine to be installed comprises at least a wind turbine mast (101) having a mast foot (102) and a mast top (103), preferably also comprises a nacelle (110) mounted on the mast top, preferably without any rotor blades,
wherein the floating foundation comprises a mast mounting structure (210) configured to mount the mast of the wind turbine thereon and secure the mast foot to the mast mounting structure, e.g. wherein the mast mounting structure and the mast foot are each provided with an annular flange structure, which flange structures are to be fastened to one another by multiple fasteners,

wherein the mast mounting structure has an upwardly directed mounting axis,

wherein use is made of a vessel (1) which is in floating condition and comprises:

- a floating hull (10),

-a crane (50) arranged on the hull, wherein the crane is provided with a hoisting system comprising winch driven hoist cables (61-64), which hoisting system is adapted to support the weight of the wind turbine and suspend the wind turbine from the hoist cables, which hoisting system is adapted to raise and lower the wind turbine in a controllable manner,

- a motion suppressor device (70) mounted to the hull of the vessel,

wherein the vessel is arranged in vicinity of the floating foundation allowing the crane to position the wind turbine above the mast mounting structure,

wherein sea-state induces relative motion between the floating foundation and the hull of the vessel in horizontal X- axis and Y- axis directions, in vertical Z-as axis direction, and in rotational directions about the horizontal X- axis and Y- axis and about the vertical Z-axis,

wherein the method comprises:

- engaging the motion suppressor device (70) with the floating foundation,
- increasing buoyancy of the floating foundation (200), e.g. by de-ballasting the floating foundation, e.g. by pumping ballast water from the floating foundation into one or more ballast tanks of the vessel (1),

wherein the engagement with the motion suppressor device counters the rise of the floating foundation caused by the increase of buoyancy, thereby the motion suppressor device suppressing at least Z-axis motion of the floating foundation relative to the hull of the vessel,

preferably, the buoyant force of the floating foundation suppressed by the motion suppressor device being at least 50%, e.g. at least 75%, of the weight of the wind turbine,

wherein use is made of an installation tool (300) comprising:

- a lower coupler (310) configured to couple to the mast mounting structure (210),
- an upper coupler (320) configured to couple to the mast foot (102),
- a multi-degrees of freedom, preferably six-degrees of freedom, connector assembly (350) having a controllable stiffness, which connector assembly interconnects the lower coupler and the upper coupler, wherein the connector assembly is configured to controllable vary the stiffness of the interconnection,

wherein the method further comprises:

- arranging the installation tool (300) at the mast mounting structure (210) and locking the lower coupler (310) to the mast mounting structure,
- suspending the wind turbine (100) from the hoisting system of the crane (50) and moving the suspended wind turbine above the installation tool,
- setting the stiffness of the connector assembly (350) at a low stiffness,
- mating the upper coupler (320) with the mast foot (102) whilst the connector assembly is set at said low stiffness,
- locking the upper coupler (320) to the mast foot (102),
- gradually increasing stiffness of the connector assembly to a high stiffness so as to cause the suspended wind turbine to be brought in motion synchronized with the mast mounting structure of the floating foundation due to forces transmitted via the connector assembly,
- landing the wind turbine (100) onto the mast mounting structure (210) whilst maintaining the high stiffness of the connector assembly such that the wind turbine is provisionally secured to the floating foundation by means of the installation tool,
- fastening the mast foot of the wind turbine (102) permanently to the mast mounting structure (210), e.g. by multiple fasteners,
- releasing the installation tool (300) from the mast foot and the mast mounting structure.

2. Method according to claim 1, wherein the increased buoyancy initially causes an upward load exerted by the floating foundation (200) on the motion suppressor device (70) of at least 1000 tonnes.

3. Method according to claim 1 or 2, wherein the weight of the wind turbine (100) that is landed on the mast mounting structure (210) is more than 1000 tonnes, e.g. more than 2000 tonnes.

4. Method according to any one or more of claims 1 – 3, wherein the suppressor device (70) is arranged on the longitudinal axis of the hull of the vessel (1), e.g. at the stern of the vessel, e.g. wherein the crane (50) is also mounted at the stern of the vessel.

5. Method according to any one or more of claims 1 – 4, wherein the installation tool (300) is mounted to the motion suppressor device (70), preferably such that the installation tool establishes the engagement between the motion suppressor device and the floating foundation (200), preferably the lower coupler (310) being connected to the motion suppressor device, e.g. gimballing about X-axis and Y-axis, e.g. freely gimballing about said axes.

6. Method according to claim 5, wherein the lower coupler (310) is displaceable in Z-axis direction relative to the motion suppressor device (70), e.g. by one or more Z-axis motion actuators (342, 343), e.g. in a controllable manner, e.g. the one or more Z-axis motion actuators being configured to vary stiffness and/or damping thereof, and/or the one or more Z-axis motion actuators being configured to provide for control of vertical position of the lower coupler relative to the motion suppressor device.

7. Method according to any one or more of claims 1 – 6, wherein the motion suppressor device (70) is rigid in Z-axis direction relative to the hull of the vessel (10).

8. Method according to any one or more of claims 1 – 7, wherein the motion suppressor device (70) is movable in a horizontal plane, preferably only in the horizontal plane, relative to the hull of the vessel (10).

9. Method according to claim 8, wherein the motion suppressor device (70) is configured to control motion of the mast mounting structure (210) in the X-axis direction and in the Y-axis direction, whilst suppressing motion in the Z-axis direction, wherein, for example, the motion suppressor device is configured and operated to dampen motion of the mast mounting structure in the X-axis direction and in the Y-axis direction.

10. Method according to any one or more of claims 1 – 9, wherein the floating foundation (200) is anchored via anchoring lines, e.g. catenary anchoring lines, and the vessel is held in position by means of a dynamic positioning system (DP system) of the vessel.

11. Method according to claim 8, wherein the motion suppressor device (70) comprises motion actuators (80) configured for causing movement of the motion suppressor device relative to the hull in a horizontal plane, preferably only in the horizontal plane relative to the hull of the vessel, wherein, for example, X-axis motion actuators as well as Y-axis motion actuators are present to control motion in said direction relative to the hull.

12. Method according to claim 11, wherein the motion suppressor device (70) comprises a motion control unit controlling the motion actuators (80) thereof, wherein, for example, the motion control unit is configured to provide a damping mode in which the motion actuators dampen motion of the motion suppressor device relative to the hull (10), e.g. in a horizontal plane, preferably only in the horizontal plane relative to the hull of the vessel.

13. Method according to any one or more of claims 1 – 12, wherein a monitoring system is provided which is configured and operated to monitor position and/or motion of a portion of the floating foundation (200) on which motion suppressor device engages (70), e.g. the mast mounting structure (210), e.g. via the lower coupler of the installation tool (310), wherein, for example, the monitoring system is linked to the motion control unit of the motion actuators of the motion suppressor device.

14. Method according to claim 5, wherein, the installation tool (300), for example the lower coupler (310) thereof, is mounted to the motion suppressor device (70) via a Z-axis motion mechanism (340) that is configured and operated to control motion of the installation tool relative to the motion suppressor device, wherein, for example, the Z-axis motion mechanism is configured and operated to provide for controlled variation of vertical stiffness of the Z-axis motion mechanism.

15. Method according to any one or more of claims 1 – 14, wherein the suppressor device (70) comprises a cantilevered arm (75), e.g. a pair of cantilevered arms (75), wherein an inner end of each cantilevered arm is connected to the hull (10), and wherein the cantilevered arm(s) each project outward from the hull of the vessel, and wherein the cantilevered arm(s) absorb the upward force exerted by the increased buoyancy of the floating foundation (200) so as to suppress relative Z-axis motion.

16. Method according to any one or more of claims 1 – 15, wherein the installation tool (300) is mounted between a pair of cantilevered arms of the motion suppressor device (70), e.g. the lower coupler (310) being connected to outer ends of the cantilevered arms (75).

17. Method according to any one or more of claims 1 – 16, wherein the connector assembly (350) of the installation tool comprises multiple hydraulic cylinders (360) arranged to allow for setting of stiffness of the connector assembly in said multi-degrees of freedom, e.g. said six degrees of freedom, e.g. the cylinders being arranged as in a Stewart platform.

18. Method according to claim 17, wherein setting of the stiffness of the connector assembly (350) is done by setting of the pressure in the multiple hydraulic cylinders (360), wherein, for example, the installation tool has multiple pressurized gas tanks connectable via an associated control valve to a medium-separator having a gas filled chamber separated by a piston from a hydraulic liquid filled chamber, the latter being connected to one or more of the hydraulic cylinders.

19. Method according to any one or more of claims 1 – 18, wherein the connector assembly (350) of the installation tool (300) comprises multiple double sided hydraulic cylinders, each having a cylinder body and having a piston rod extending through opposed axial ends of the cylinder body, wherein a piston on the piston rod delimits equal cross-section chambers in the cylinder body, wherein, preferably, a controllable throttle bypass is provided between the chambers of each cylinder and wherein, preferably, the method comprises adjusting the throttle so as to set damping of the connector assembly.

20. Method according to any one or more of claims 1 – 19, wherein each of the lower coupler (310) and the upper coupler (320) comprises a C-shaped main body and a pivotal door member (315) configured to move between an opened and closed position thereof, so that in the closed position the coupler forms an annulus, and the opened position allowing removal of the installation tool after completion of the wind turbine installation.

21. Method according to any one or more of claims 1 – 20, wherein the installation tool is provided with latching members (391, 392) configured and operated to latch the couplers directly to one another once the landing of the wind turbine has been completed.

22. Method according to any one or more of claims 1 – 21, wherein the upper coupler (320) of the installation tool (300) is provided with an operable mating mechanism (380) which is configured and operated to initially engage on the mast foot (102) with a low stiffness and to gradually increase said stiffness so that the upper coupler (320) becomes synchronized with the mast foot in the horizontal directions, prior to the upper coupler being locked, i.e. rigidly coupled, to the mast foot completing the mating step.

23. Method according to any one or more of claims 1 – 22, wherein the wind turbine is suspended from winch driven cables (61-64) of the crane that extend to lifting points at or near the mast foot and wherein a spreader (105) or stabilizer device is provided between the

winch driven cables and the mast at a height above the center of gravity (108) of the suspended wind turbine.

24. Method according to any one or more of claims 1 – 23, wherein the crane (50) has four hoisting assemblies (61, 62, 63, 64), each with a winch driven cable and an associated winch from which the wind turbine is suspended, preferably the winches being configured to be driven in constant tension mode with load equalizing so that each hoisting assembly carries the same load.

25. Vessel (1) for installation of a wind turbine (100) on a floating foundation (200) that is in floating condition and subject to sea-state induced motions, e.g. at the site of an offshore windfarm, wherein the wind turbine to be installed comprises at least a wind turbine mast (101) having a mast foot (102) and a mast top (103), preferably also comprises a nacelle (110) mounted on the mast top, preferably without any rotor blades,
wherein the floating foundation comprises a mast mounting structure configured to mount the mast of the wind turbine thereon and fasten the mast foot to the mast mounting structure,
wherein the mast mounting structure has an upwardly directed mounting axis, e.g. wherein the mast mounting structure and the mast foot are each provided with an annular flange structure, which flange structures are to be fastened to one another by multiple fasteners,
which vessel comprises:

- a floating hull (10),
-a crane (50) arranged on the hull, wherein the crane is provided with a hoisting system comprising winch driven hoist cables that is adapted to support the weight of the wind turbine and suspend the wind turbine from the hoist cables, which hoisting system is adapted to raise and lower the wind turbine in a controllable manner,
- a motion suppressor device (70) mounted to the hull of the vessel,

wherein the vessel is configured to be arranged in vicinity of the floating foundation allowing the crane to position the wind turbine above the mast mounting structure,

wherein, in use, sea-state induces relative motion between the floating foundation and the hull of the vessel in horizontal X- axis and Y- axis directions, in vertical Z-as axis direction, and in rotational directions about the horizontal X- axis and Y- axis and about the vertical Z-axis,

wherein the vessel is provided with an installation tool (300) comprising:

- a lower coupler (310) configured to couple to the mast mounting structure (210),
- an upper coupler (320) configured to couple to the mast foot (102),

- a multi-degrees of freedom, preferably six-degrees of freedom, connector assembly (350) having a controllable stiffness, which connector assembly interconnects the lower coupler and the upper coupler, wherein the connector assembly is configured to controllable vary the stiffness of the interconnection,

wherein the vessel in conjunction with the installation tool is configured to perform a method which comprises:

- engaging the motion suppressor device (70) with the floating foundation (200),
- increasing buoyancy of the floating foundation, e.g. by de-ballasting the floating foundation, e.g. by pumping ballast water from the floating foundation into one or more ballast tanks of the vessel,

wherein the engagement with the motion suppressor device (70) counters the rise of the floating foundation (200) caused by the increase of buoyancy, thereby the motion suppressor device suppressing at least Z-axis motion of the floating foundation relative to the hull of the vessel,

preferably, the buoyant force of the floating foundation suppressed by the suppressor device being at least 50%, e.g. 75%, of the weight of the wind turbine,

wherein the method further comprises:

- arranging the installation tool (300) at the mast mounting structure (310) and locking the lower coupler (310) to the mast mounting structure,
- suspending the wind turbine (100) from the hoisting system of the crane (50) and moving the suspended wind turbine above the installation tool,
- setting the stiffness of the connector assembly (350) at a low stiffness,
- mating the upper coupler (320) with the mast foot (103) whilst the connector assembly is set at said low stiffness,
- locking the upper coupler (320) to the mast foot (103),
- gradually increasing stiffness of the connector assembly to a high stiffness so as to cause the suspended wind turbine (100) to be brought in motion synchronized with the mast mounting structure (210) of the floating foundation due to forces transmitted via the connector assembly,
- landing the wind turbine (100) onto the mast mounting structure (210) whilst maintaining the high stiffness of the connector assembly such that the wind turbine is provisionally secured to the floating foundation by means of the installation tool,

- fastening the mast foot of the wind turbine permanently to the mast mounting structure, e.g. by multiple fasteners,
- releasing the installation tool from the mast foot and the mast mounting structure.
-

26. Vessel (1) for installation of a wind turbine (100) on a floating foundation (200) that is in floating condition and subject to sea-state induced motions, e.g. at the site of an offshore windfarm, wherein the wind turbine to be installed comprises at least a wind turbine mast (101) having a mast foot (102) and a mast top (103), preferably also comprises a nacelle (110) mounted on the mast top, preferably without any rotor blades,
wherein the floating foundation comprises a mast mounting structure (210) configured to mount the mast of the wind turbine thereon and fasten the mast foot to the mast mounting structure, wherein the mast mounting structure has an upwardly directed mounting axis, e.g. wherein the mast mounting structure and the mast foot are each provided with an annular flange structure, which flange structures are to be fastened to one another by multiple fasteners, which vessel comprises:

- a floating hull (10),

-a crane (50) arranged on the hull, wherein the crane is provided with a hoisting system comprising winch driven hoist cables that is adapted to support the weight of the wind turbine and suspend the wind turbine from the hoist cables, which hoisting system is adapted to raise and lower the wind turbine in a controllable manner,

- a motion suppressor device (70) mounted to the hull of the vessel for suppressing Z-axis motion of the floating foundation relative to the hull of the vessel.

27. Vessel according to claim 26, wherein the motion suppressor device (70) is configured to absorb an upward load exerted by the floating foundation (200) on the motion suppressor device of at least 1000 tonnes.

28. Vessel according to claim 26 or 27, wherein the suppressor device (70) is arranged on the longitudinal axis of the hull of the vessel (10), e.g. at the stern of the vessel, e.g. wherein the crane (50) is also mounted at the stern of the vessel.

29. Vessel according to any one or more of claims 26 – 28, wherein an installation tool (300) is mounted to the motion suppressor device (70), the installation tool comprising:

- a lower coupler (310) configured to couple to the mast mounting structure (210),
- an upper coupler (320) configured to couple to the mast foot (102),
- a multi-degrees of freedom, preferably six-degrees of freedom, connector assembly (350) having a controllable stiffness, which connector assembly interconnects the lower

coupler (310) and the upper coupler (320), wherein the connector assembly is configured to controllable vary the stiffness of the interconnection,

wherein, preferably, the installation tool (300) is configured to establish the engagement between the motion suppressor device and the floating foundation, preferably the lower coupler being connected to the motion suppressor device, e.g. gimballing about X-axis and Y-axis, e.g. freely gimballing about said X, Y axes.

30. Vessel according to claim 29, wherein the lower coupler (310) is displaceable in Z-axis direction relative to the motion suppressor device (70), e.g. by one or more Z-axis motion actuators (342, 343), e.g. in a controllable manner, e.g. the one or more Z-axis motion actuators being configured to vary stiffness and/or damping thereof, and/or the one or more Z-axis motion actuators being configured to provide for control of vertical position of the lower coupler relative to the motion suppressor device.

31. Vessel according to any one or more of claims 26 – 30, wherein the motion suppressor device (70) is rigid in Z-axis direction relative to the hull of the vessel (10).

32. Vessel according to any one or more of claims 26 – 31, wherein the motion suppressor device (70) is movable in a horizontal plane, preferably only in the horizontal plane, relative to the hull of the vessel (10).

33. Vessel according to claim 32, wherein the motion suppressor device (70) is configured to control motion of the mast mounting structure in the X-axis direction and in the Y-axis direction, whilst suppressing motion in the Z-axis direction, wherein, for example, the motion suppressor device is configured and operated to dampen motion of the mast mounting structure in the X-axis direction and in the Y-axis direction.

34. Vessel according to any one or more of claims 26 – 33, wherein the motion suppressor device (70) comprises motion actuators (80) configured for causing movement of the motion suppressor device relative to the hull in a horizontal plane, preferably only in the horizontal plane relative to the hull of the vessel, wherein, for example, X-axis motion actuators as well as Y-axis motion actuators are present to control motion in said direction relative to the hull.

35. Vessel according to claim 34, wherein the motion suppressor device (70) comprises a motion control unit controlling the motion actuators thereof, wherein, for example, the motion control unit is configured to provide a damping mode in which the motion actuators (80) dampen motion of the motion suppressor device relative to the hull (10), e.g. in a horizontal plane, preferably only in the horizontal plane relative to the hull of the vessel.

36. Vessel according to any one or more of claims 26 – 35, wherein a monitoring system is provided which is configured and operated to monitor position and/or motion of a portion of the floating foundation on which motion suppressor device (70) engages, e.g. the mast mounting structure (210), e.g. via the lower coupler (310) of the installation tool (300), wherein, for example, the monitoring system is linked to the motion control unit of the motion actuators of the motion suppressor device.

37. Vessel according to claim 29, wherein the installation tool (300), for example the lower coupler (31) thereof, is mounted to the motion suppressor device (70) via a Z-axis motion mechanism (340) that is configured to control motion of the installation tool relative to the motion suppressor device, wherein, for example, the Z-axis motion mechanism is configured to provide for controlled variation of vertical stiffness of the Z-axis motion mechanism.

38. Vessel according to any one or more of claims 26 – 37, wherein the motion suppressor device (70) comprises a cantilevered arm (75), e.g. a pair of cantilevered arms, wherein an inner end of each cantilevered arm is connected to the hull, and wherein the cantilevered arm(s) each project outward from the hull of the vessel (10), and wherein the cantilevered arm(s) are configured to absorb the upward force exerted by the increased buoyancy of the floating foundation so as to suppress relative Z-axis motion.

39. Vessel according to claims 29 and 38, wherein the installation tool (300) is mounted between the pair of cantilevered arms (75) of the motion suppressor device (70), e.g. the lower coupler being connected to outer ends of the cantilevered arms.

40. Vessel according to any one or more of claims 26 – 39, wherein the connector assembly (350) of the installation tool (300) comprises multiple hydraulic cylinders (360) arranged to allow for setting of stiffness of the connector assembly in said multi-degrees of freedom, e.g. said six degrees of freedom, wherein, for example, setting of the stiffness of the connector assembly is done by setting of the pressure in the multiple hydraulic cylinders.

41. Vessel according to any one or more of claims 26 – 40, wherein the connector assembly (350) of the installation tool (300) comprises multiple double sided hydraulic cylinders, wherein, preferably, a controllable throttle bypass is provided between chambers of each cylinder.

42. Vessel according to claim 29, wherein each of the lower coupler (310) and the upper coupler (320) comprises a C-shaped main body and a pivotal door member configured to move between an opened and closed position thereof, so that in the closed position the

coupler forms an annulus, and the opened position allowing removal of the installation tool after completion of the wind turbine installation.

43. Vessel according to claim 29, wherein the upper coupler (320) of the installation tool (300) is provided with an operable mating mechanism (380) which is configured to initially engage on the mast foot (102) with a low stiffness and to gradually increase said stiffness so that the upper coupler becomes synchronized with the mast foot in the horizontal directions, prior to the upper coupler being locked, i.e. rigidly coupled, to the mast foot completing the mating step.

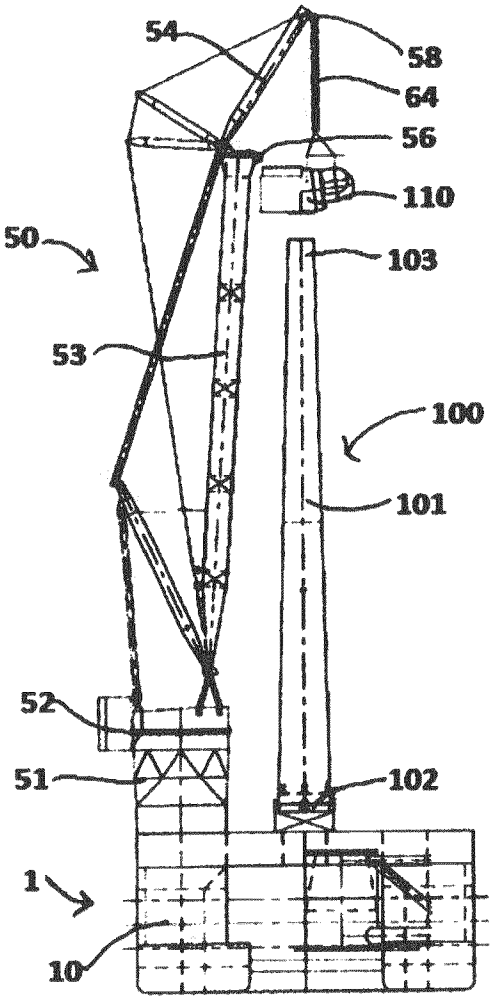
54
58
64
56
110
50
103
53
100
101
52
51
102
1
10

Fig. 1

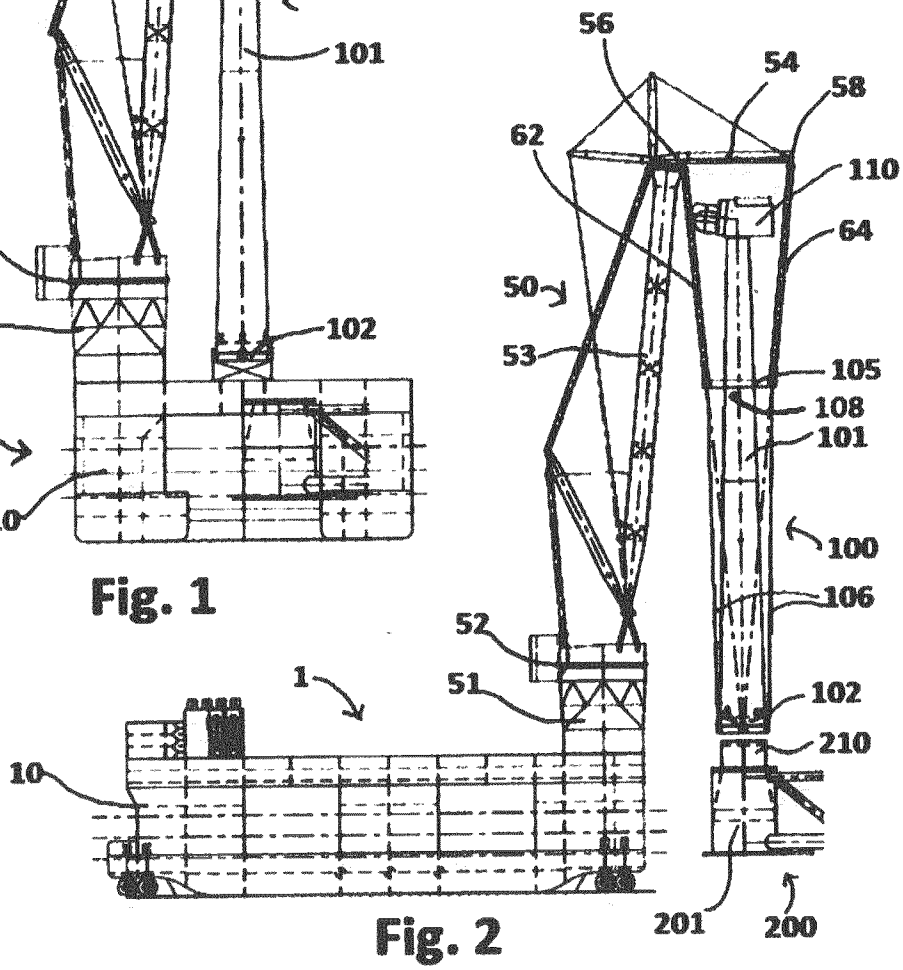
56
54
58
62
110
64
50
53
105
108
101
100
106
52
51
102
210
1
10
201
200

Fig. 2

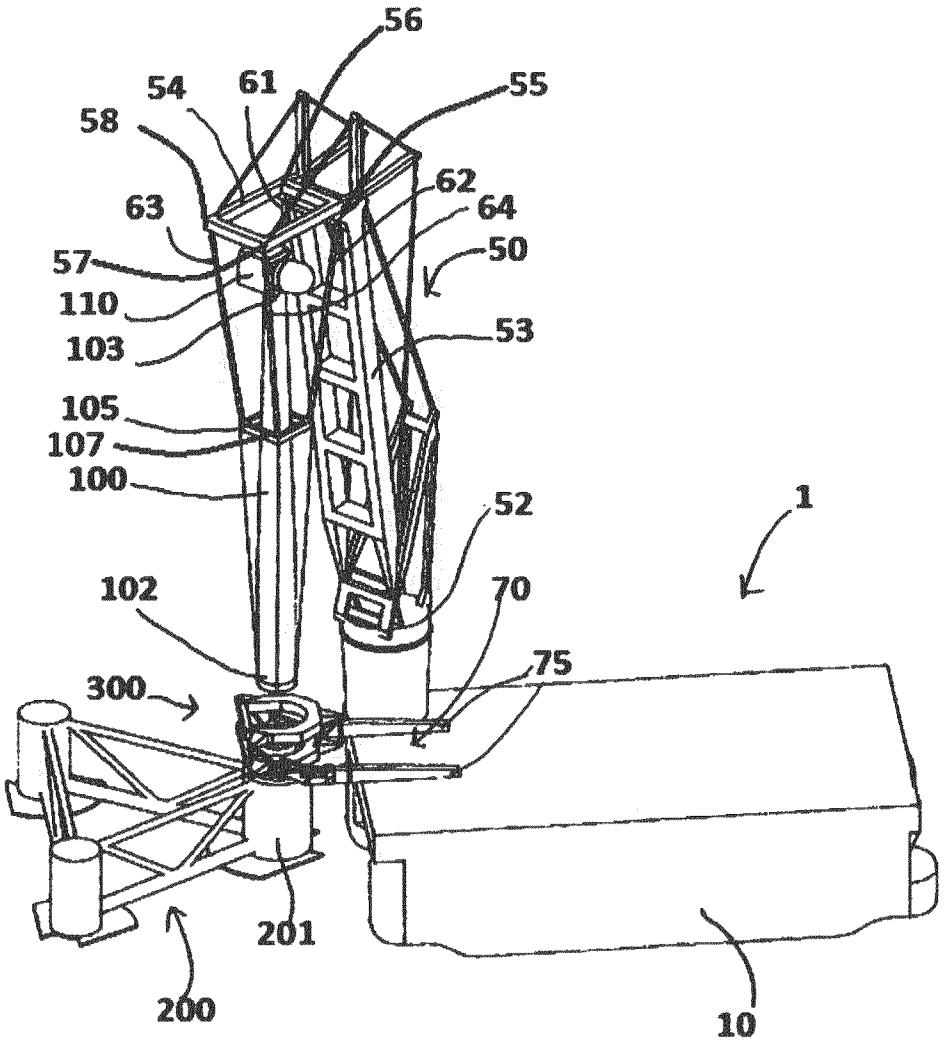
56
54
61
55
58
62
63
64
57
50
110
53
103
105
107
100
52
1
102
70
75
300
201
200
10

Fig. 3

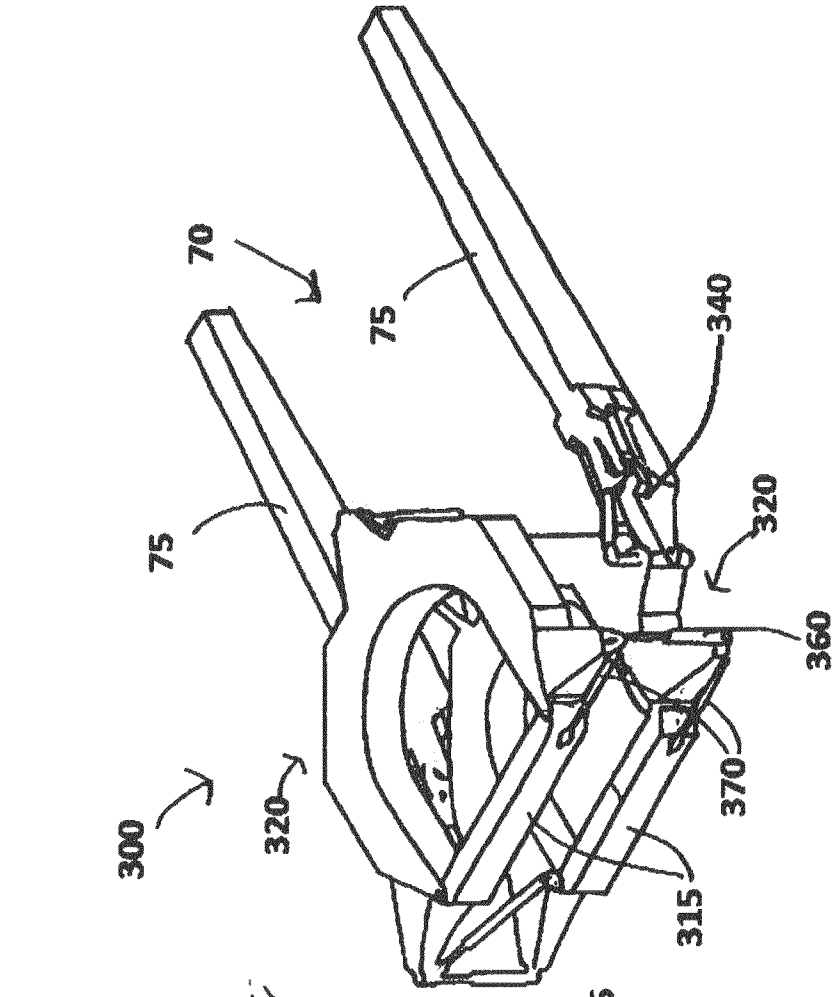
70
75
340
320
75
360
300
320
370
315

Fig. 5

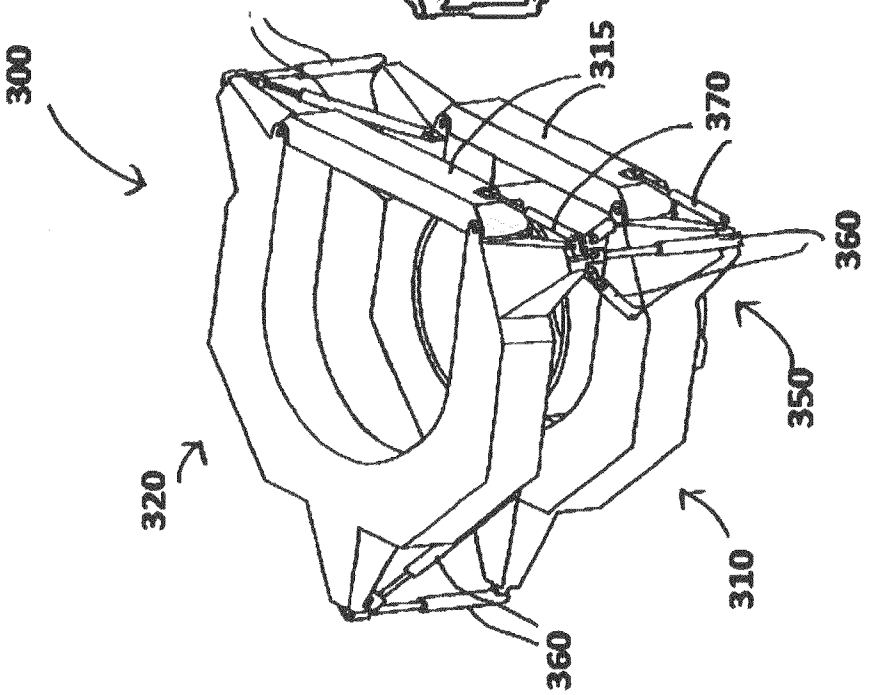
300
315
370
360
350
320
310
360

Fig. 4

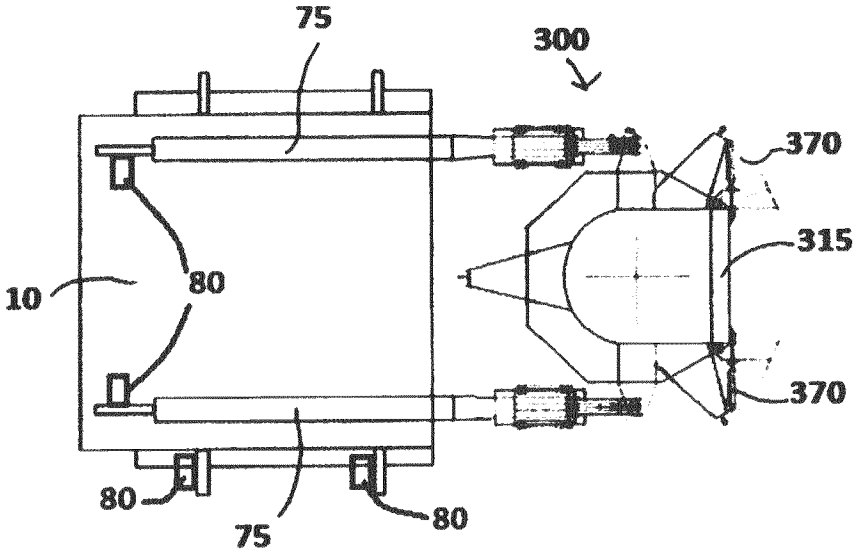
75
300
370
315
10
80
370
80
75
80

Fig. 6

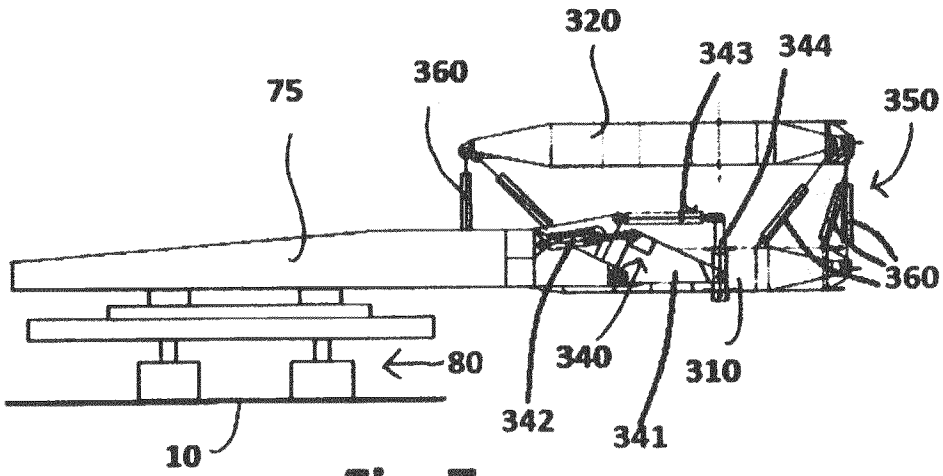
320
343
344
360
75
350
360
80
340
310
342
341
10

Fig. 7

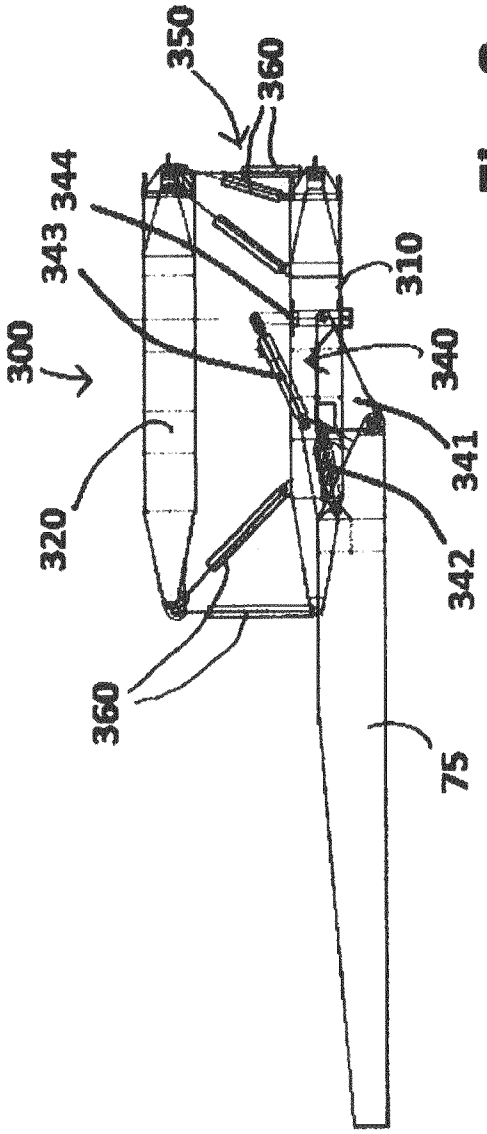
350
360
344
343
310
300
340
320
341
342
360
75

Fig. 8

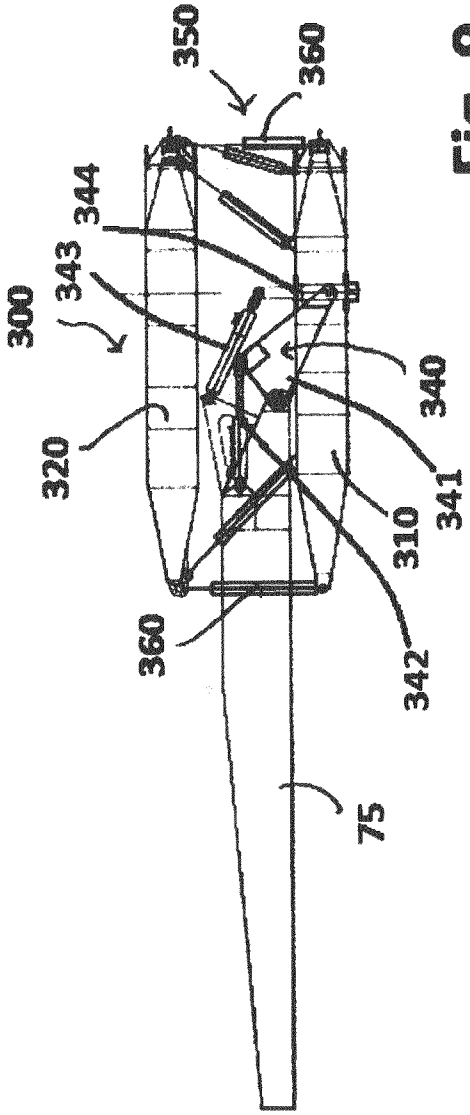
350
360
344
343
300
340
320
341
310
360
342
75

Fig. 9

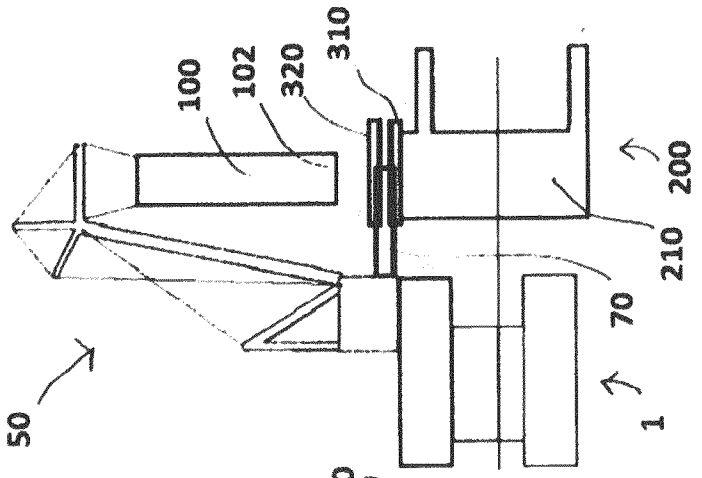

Fig. 10c

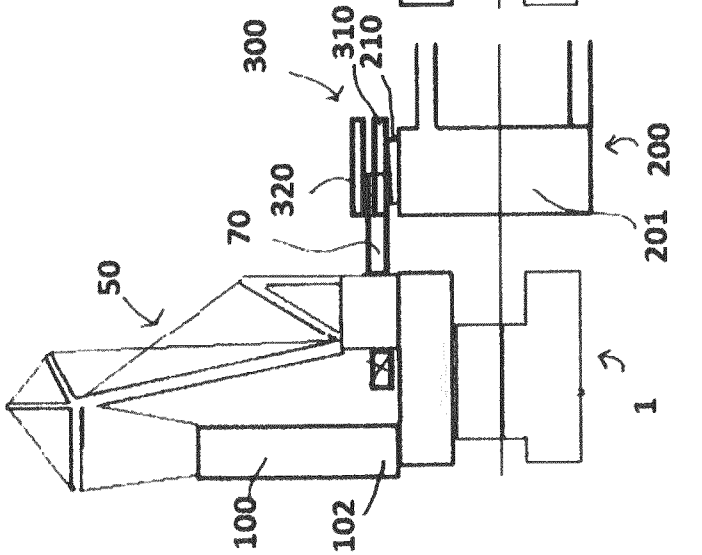

Fig. 10b

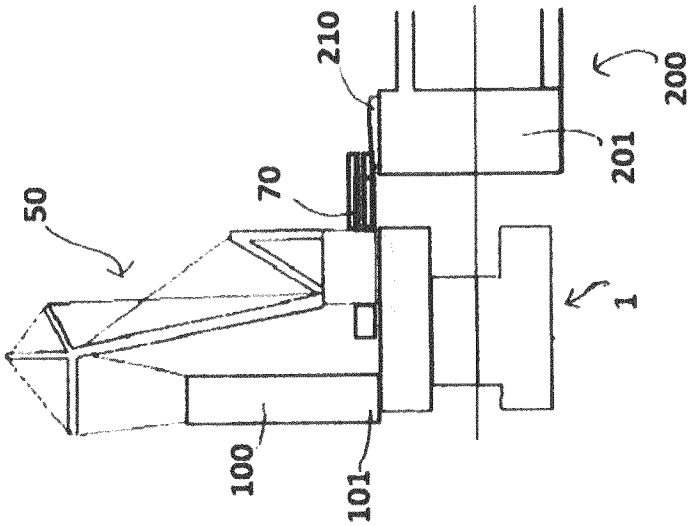

Fig. 10a

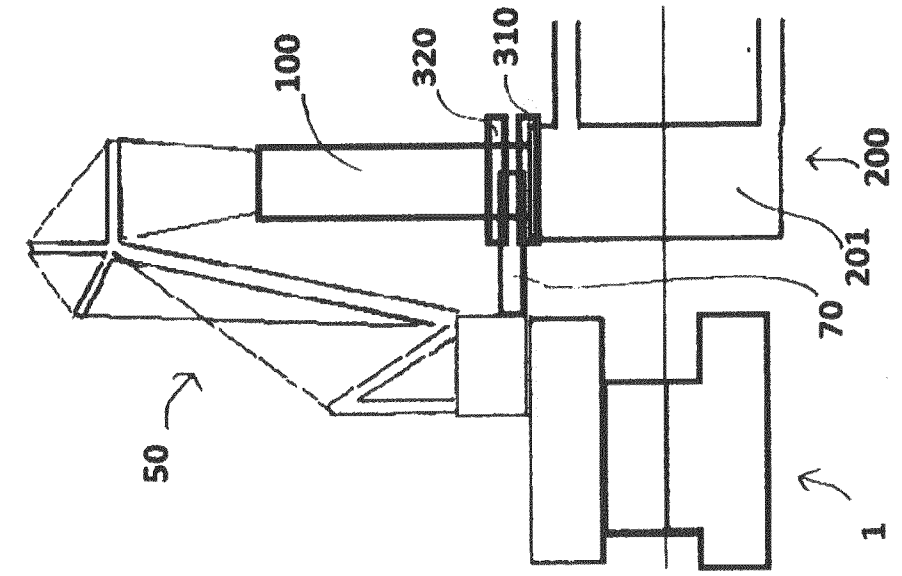

Fig. 10e

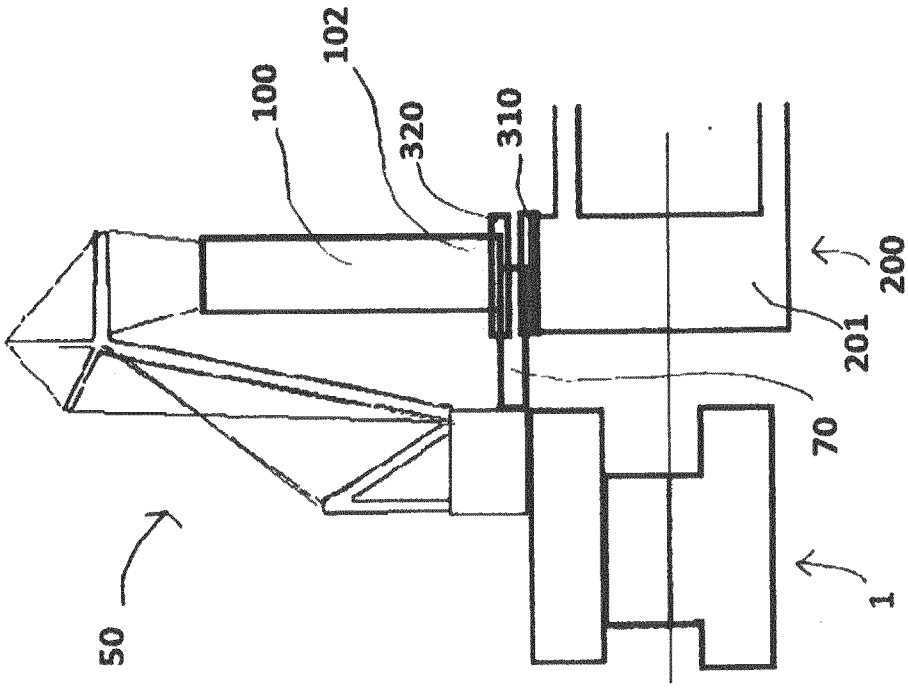

Fig. 10d

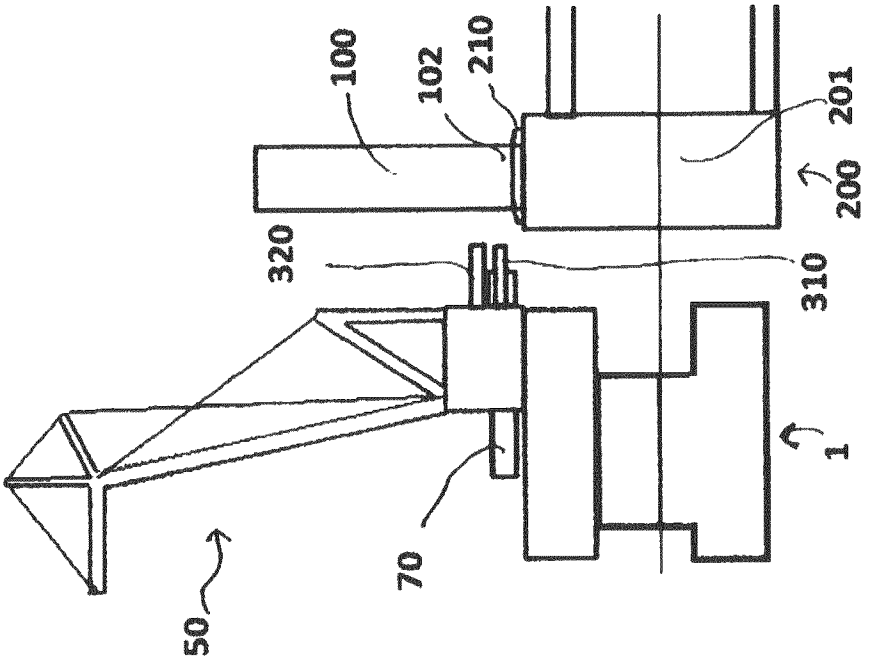

Fig. 10g

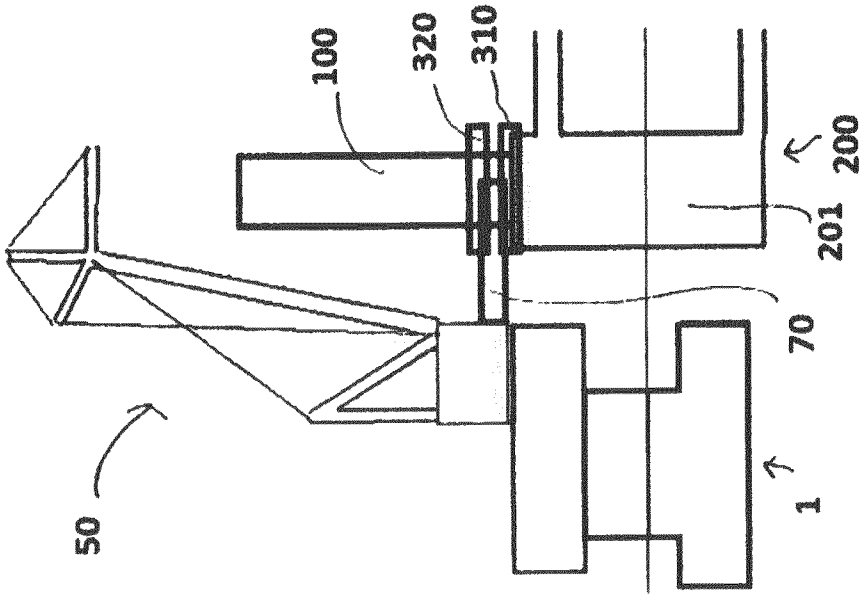

Fig. 10f

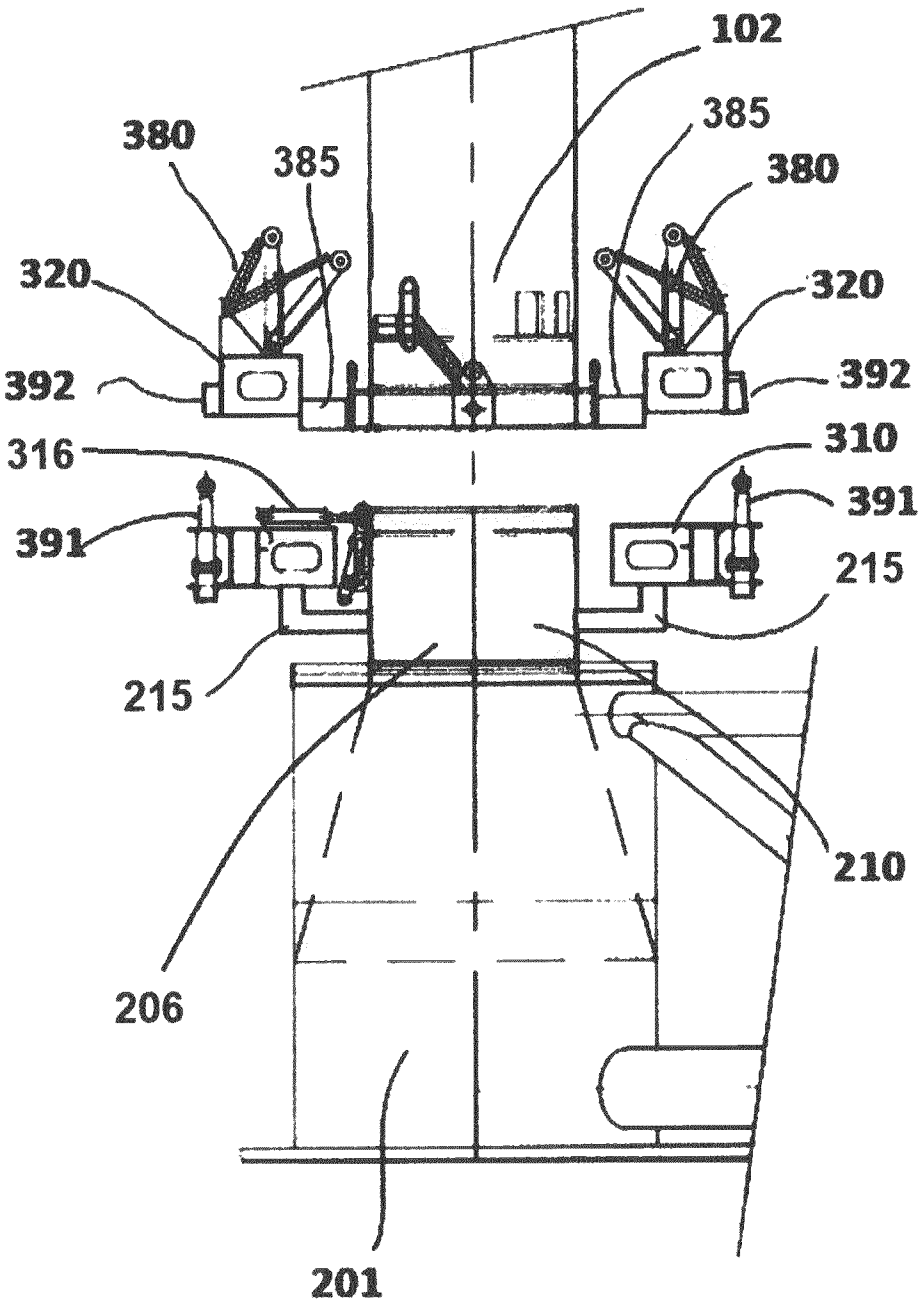
102
385
380
380
385
320
320
392
392
316
310
391
391
215
215
210
206
201

Fig. 11

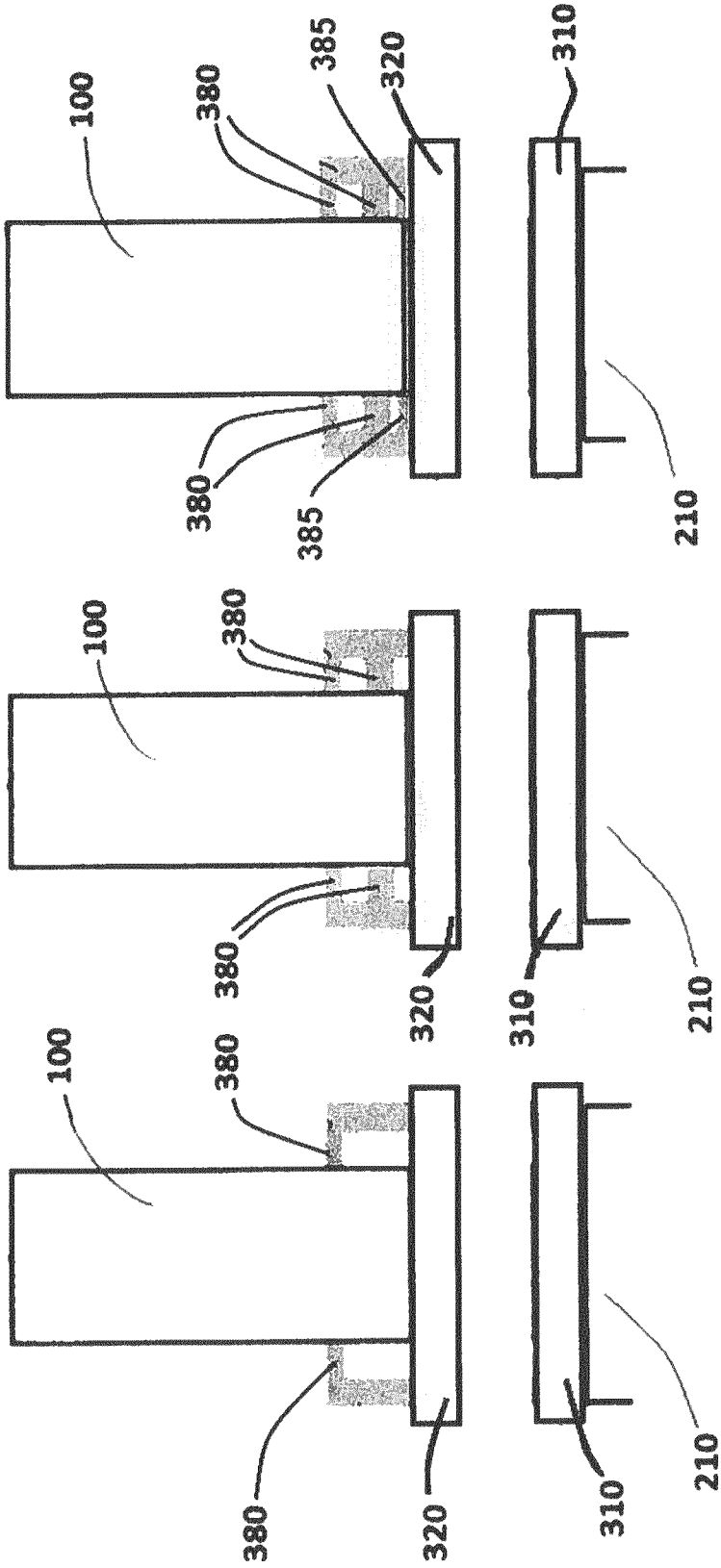

Fig. 12c

Fig. 12b

Fig. 12a



Fig. 13a

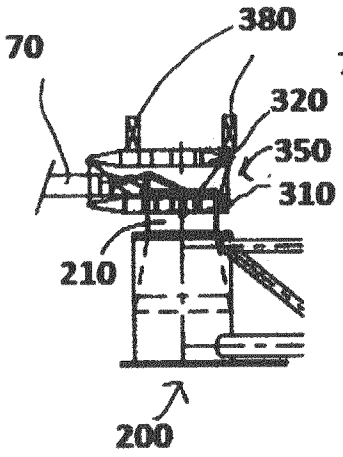

Fig. 13b

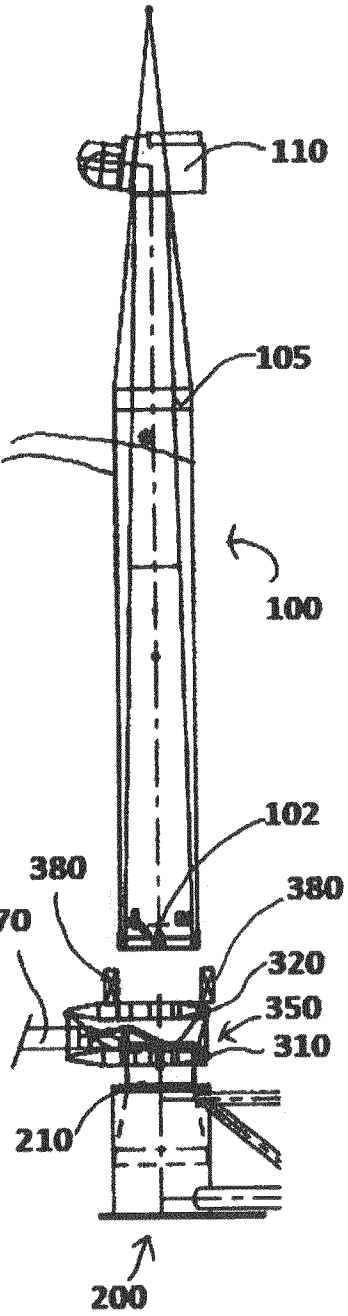

Fig. 13c

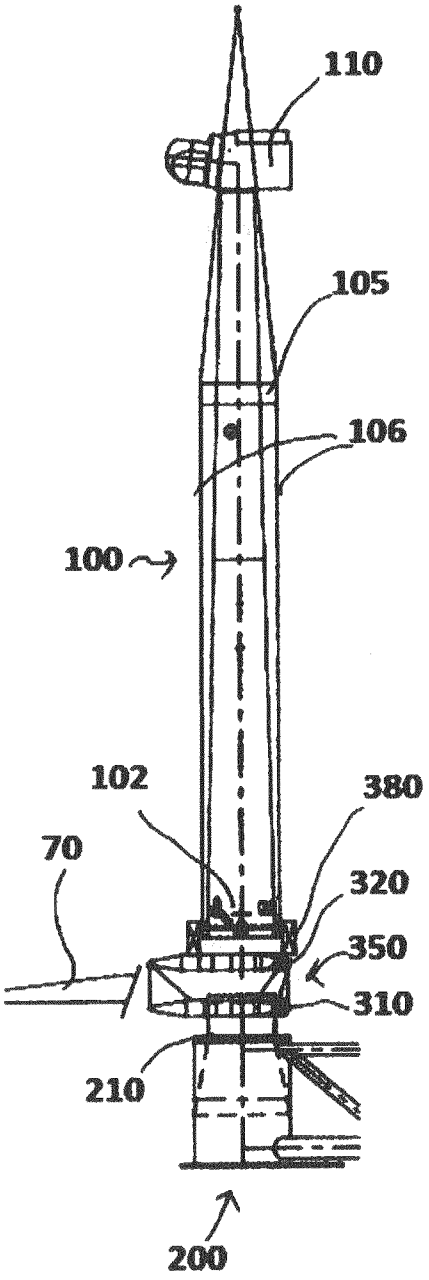

Fig. 13d

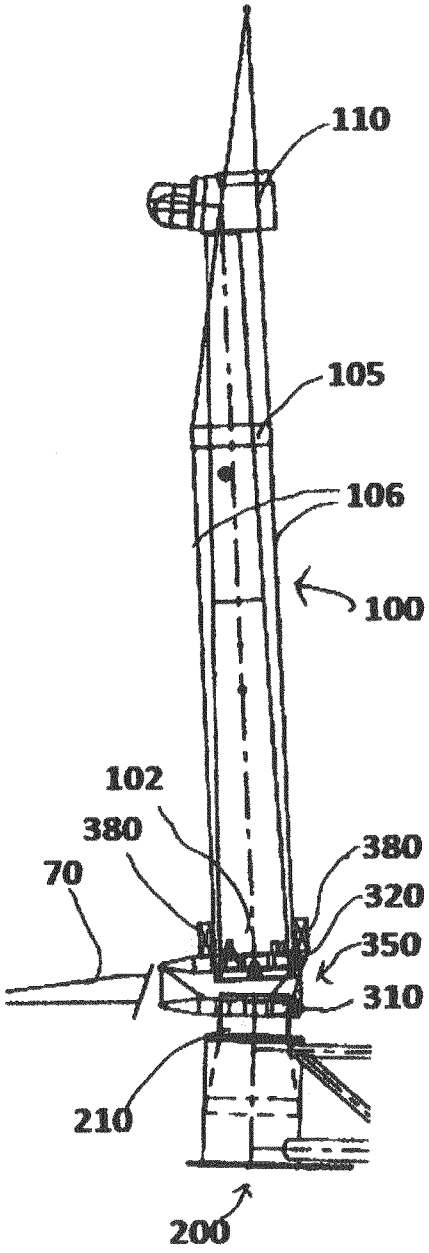

Fig. 13e

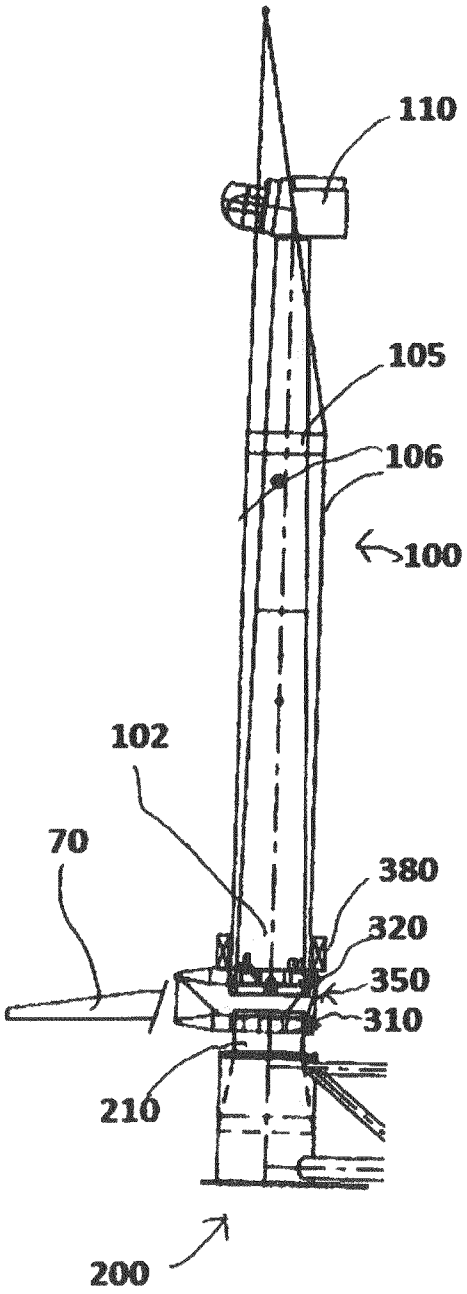

Fig. 13f

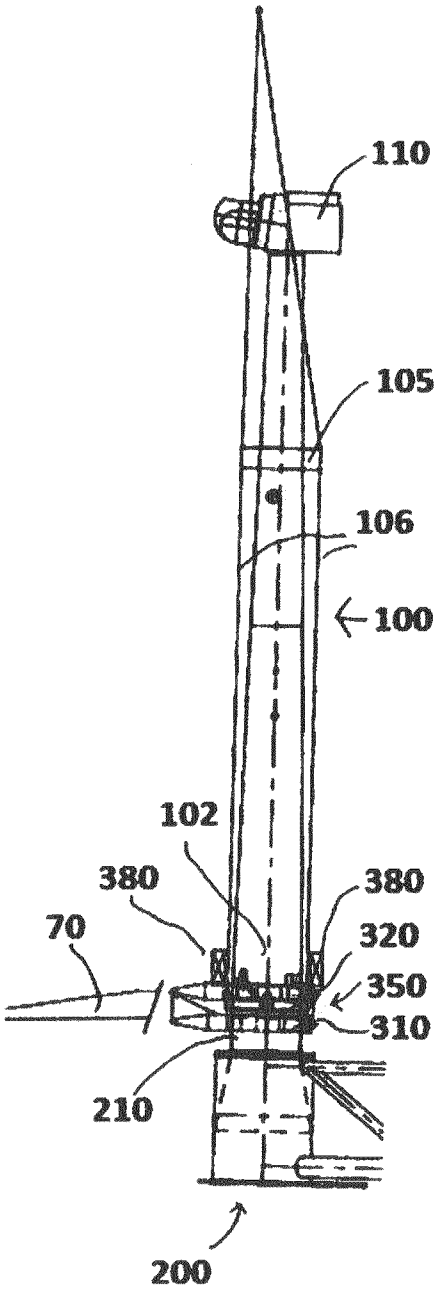

Fig. 13g

INTERNATIONAL SEARCH REPORT

International application No
PCT/EP2024/068943

A. CLASSIFICATION OF SUBJECT MATTER

INV. B66C23/18 B66C23/52 B63B27/10 B63B77/10 B63B35/00
ADD. B63B17/00

According to International Patent Classification (IPC) or to both national classification and IPC

B. FIELDS SEARCHED

Minimum documentation searched (classification system followed by classification symbols)

B66F B66C B63B

Documentation searched other than minimum documentation to the extent that such documents are included in the fields searched

Electronic data base consulted during the international search (name of data base and, where practicable, search terms used)

EPO-Internal, WPI Data

C. DOCUMENTS CONSIDERED TO BE RELEVANT

Category*	Citation of document, with indication, where appropriate, of the relevant passages	Relevant to claim No.
X	WO 2022/084344 A1 (ITREC BV [NL]) 28 April 2022 (2022-04-28) cited in the application	26-28, 31-36,38
A	page 16, line 24 - page 19, line 16 claim 1 figures	1-25,29, 30,37, 39-43

A	WO 2023/072635 A1 (ITREC BV [NL]) 4 May 2023 (2023-05-04) abstract figures	1,25,26

☐ Further documents are listed in the continuation of Box C.

☒ See patent family annex.

* Special categories of cited documents :

"A" document defining the general state of the art which is not considered to be of particular relevance

"E" earlier application or patent but published on or after the international filing date

"L" document which may throw doubts on priority claim(s) or which is cited to establish the publication date of another citation or other special reason (as specified)

"O" document referring to an oral disclosure, use, exhibition or other means

"P" document published prior to the international filing date but later than the priority date claimed

"T" later document published after the international filing date or priority date and not in conflict with the application but cited to understand the principle or theory underlying the invention

"X" document of particular relevance;; the claimed invention cannot be considered novel or cannot be considered to involve an inventive step when the document is taken alone

"Y" document of particular relevance;; the claimed invention cannot be considered to involve an inventive step when the document is combined with one or more other such documents, such combination being obvious to a person skilled in the art

"&" document member of the same patent family

Date of the actual completion of the international search	Date of mailing of the international search report
9 October 2024	17/10/2024

Name and mailing address of the ISA/	Authorized officer
European Patent Office, P.B. 5818 Patentlaan 2 NL - 2280 HV Rijswijk Tel. (+31-70) 340-2040, Fax: (+31-70) 340-3016	Gardel, Antony

INTERNATIONAL SEARCH REPORT

Information on patent family members

International application No
PCT/EP2024/068943

Patent document cited in search report	Publication date	Patent family member(s)	Publication date
WO 2022084344 A1	28-04-2022	CN 116348370 A	27-06-2023
		EP 4232352 A1	30-08-2023
		US 2023392584 A1	07-12-2023
		WO 2022084344 A1	28-04-2022
WO 2023072635 A1	04-05-2023	EP 4422967 A1	04-09-2024
		WO 2023072635 A1	04-05-2023