United States Patent [19]

Cassel et al.

[11] **3,731,888**

[45] **May 8, 1973**

[54] WIRE REEL APPARATUS

[75] Inventors: **Carlis E. Cassel**, Niles; **Robert F. Currier**, Jackson, both of Mich.

[73] Assignee: **National-Standard Company**, Niles, Mich.

[22] Filed: **June 2, 1972**

[21] Appl. No.: **258,985**

[52] **U.S. Cl.**.....**242/129**, 242/77.2

[51] **Int. Cl.**.....**B65h 75/20**, B65h 49/00

[58] **Field of Search**.....242/77–77.2, 86.4, 129

[56] **References Cited**

UNITED STATES PATENTS

1,571,275	2/1926	Kelley	242/86.4
3,503,569	3/1970	Gildart	242/129 X

Primary Examiner—Leonard D. Christian

Attorney—John A. Dienner et al.

[57] **ABSTRACT**

A wire reel apparatus has a cylinder core member whose axial bore conforms to standard diameter spool sizes of commercial letoff machines. A first side member is secured at one end of the core member and is formed from a plurality of spaced radial wire frames. A plurality of support members are secured between the other end of the core member and the first side member, and include an axial portion lying in a concentric plane to the axis of the core member to provide a supporting surface for the coils of wire. A detachable second side member is formed of a plurality of spaced radial frame members and is secured in abutting relation with the radial portion of the tie members by means of a pair of clamping devices.

3 Claims, 2 Drawing Figures

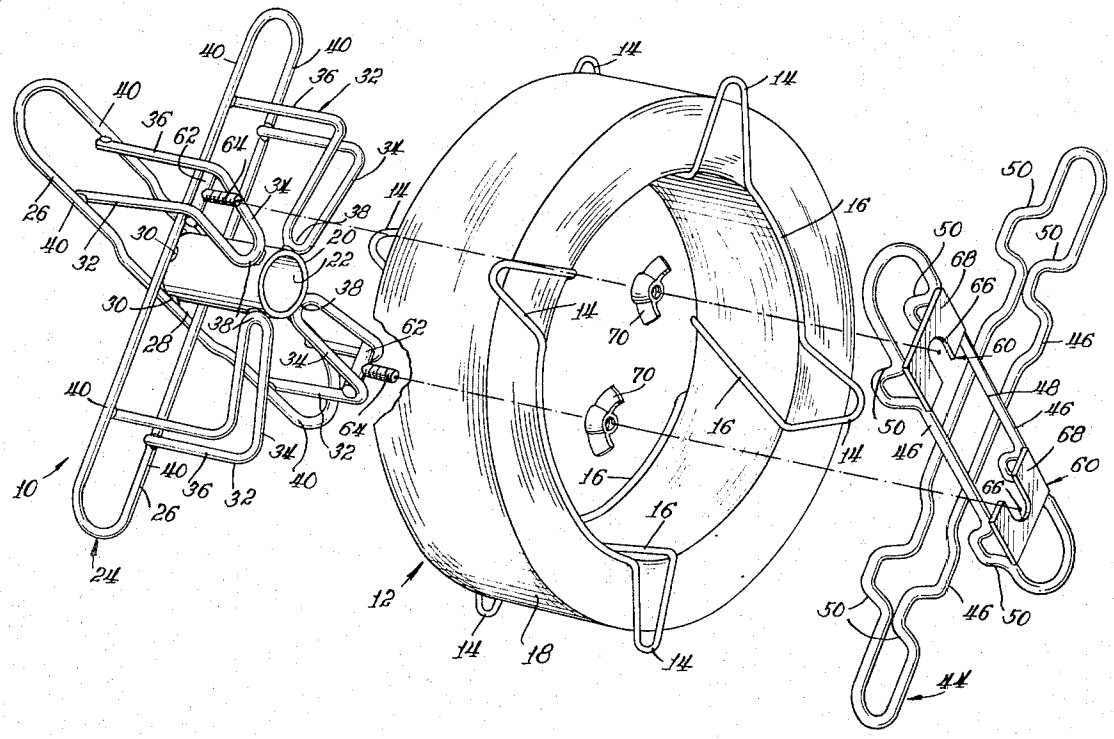

PATENTED MAY 8 1973

3,731,888

SHEET 1 OF 2

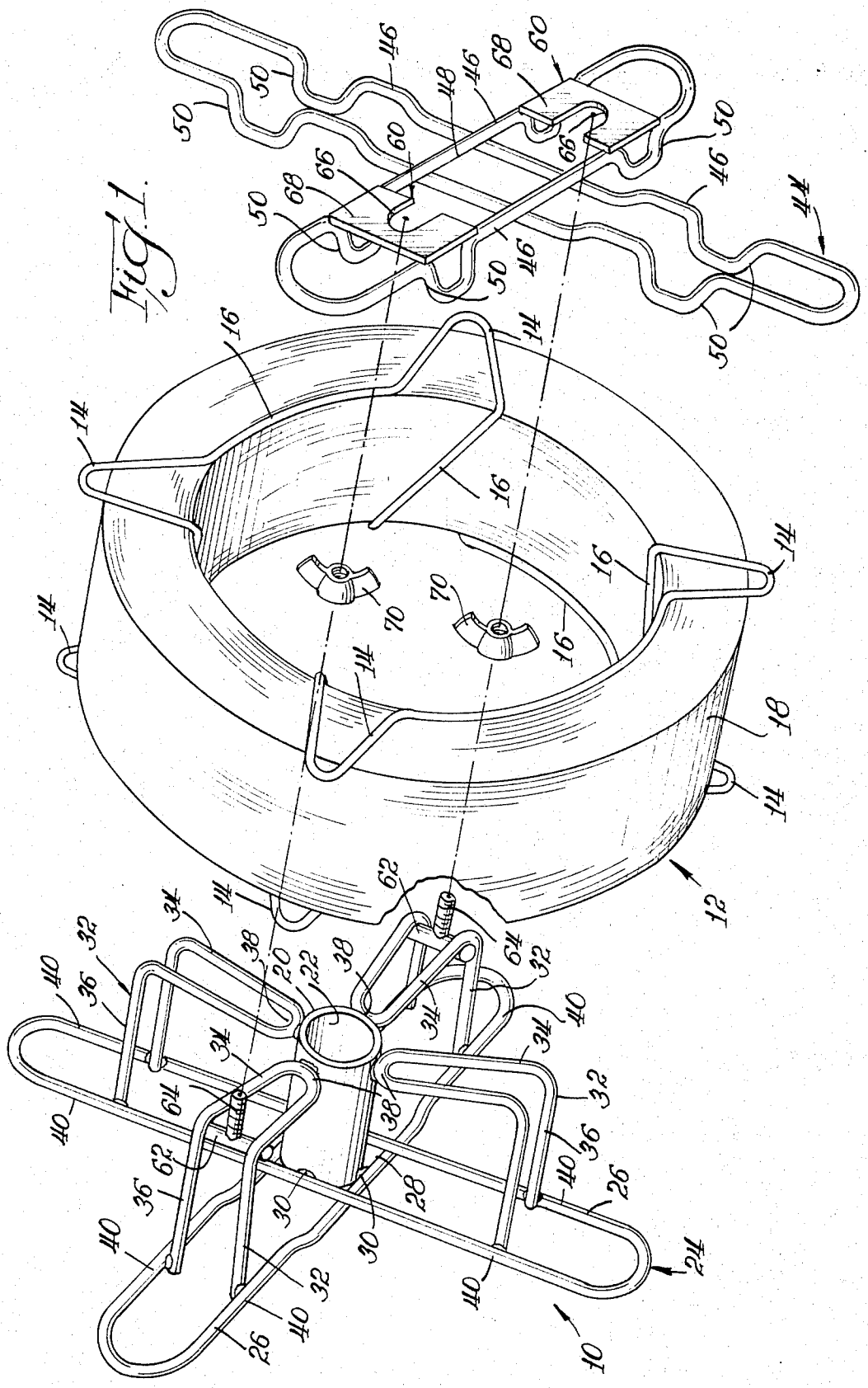

Fig. 1

Fig. 2.

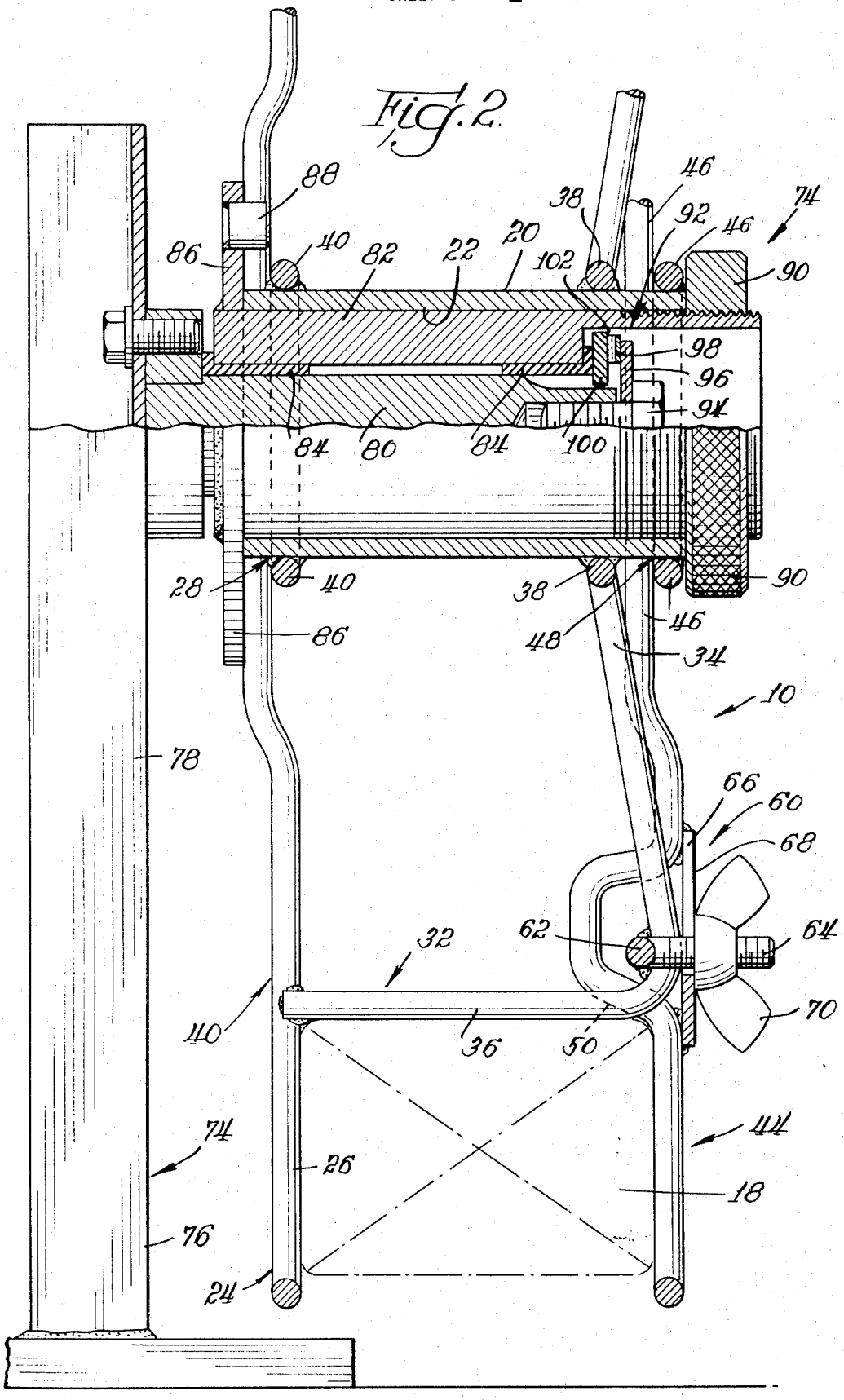
88
86
40
82
22
20
102
38
46
92
46
74
90
98
96
94
84
80
84
100
28
40
38
90
86
48
46
34
10
78
66
60
68
62
64
32
70
40
36
50
74
26
44
18
76
24

WIRE REEL APPARATUS

BACKGROUND OF THE INVENTION

This invention relates to reels, and in particular to wire frame reels which may be manually assembled after a wire coil package is placed on the wire supporting surface.

This invention is directed to a wire reel apparatus that handles a wire coil package having a wire core frame constructed from lengths of wire shaped into the desired configuration to support multiple loops of stranded wire. The present commercial reel apparatus for accommodating such wire coil packages are quite cumbersome to use since they require the manipulation of several parts and these commercial reel apparatus generally have small mounting shafts which do not fit standard size spools of commercial letoff machines.

This invention provides a unique but simple design for assembling the wire coil packages and uses a standard size cylindrical bore of a size suitable for mounting on a commercial spool letoff machine. Also this invention is an improvement over art devices in that it is relatively inexpensive to manufacture and quite reliable in operation.

SUMMARY OF THE INVENTION

A wire reel apparatus embodying the principles of this invention is designed to receive a wire coil package and includes a central core member having a cylindrical bore with a diameter adapted to fit standard size spool letoff machines. A first side member is secured at one end of the core member and is formed from a plurality of spaced radial wire frames. A plurality of support members are secured between the other end of the core member and the first side member, and include an axial portion lying in a concentric plane to the axis of the core member to provide a supporting surface for the coils of wire. A detachable second side member is formed of a plurality of spaced radial frame members and is secured in abutting relation with the radial portion of the tie members by means of a pair of clamping devices.

DESCRIPTION OF THE DRAWINGS

For a better understanding of this invention reference may be made to the accompanying drawings, in which:

FIG. 1 is a front perspective exploded view of the preferred embodiment of this invention showing the manner in which a packaged coil of wire is assembled on the preferred embodiment; and

FIG. 2 is a cross-sectional view showing the preferred embodiment of this invention mounted on a commercial letoff machine.

DESCRIPTION OF A PREFERRED EMBODIMENT

Referring now to FIG. 1, a wire reel apparatus incorporating the principles of this invention and generally designated by the reference numeral **10** is illustrated prior to the assembly of a wire coil package **12**. The wire coil package **12** has a wire frame construction formed from a length of wire to provide axially spaced apart side portions **14** and a core portion **16**, and multilayers of coils **18** are wound thereon. The wire coil package forms no part of this invention and is shown to give a better understanding of this invention.

The wire reel apparatus **10** is formed with a central core member **20** having an inner cylindrical bore **22** of a diameter adapted to fit standard size letoff machines. Secured to one end of core member **20** is a side member **24** formed from a plurality of elongated closed-loop wire forms **26** secured together in a criss-cross arrangement. The center square opening **28** of the side member **24** is made large enough to fit over the end of the core member **20** and is secured, as by welding, to the outer peripheral surface of the core member at the four points of contact **30**.

A plurality of support members **32** is secured between the side member **24** and the other end of the core member **20** to provide a supporting surface for the wire coil package **12**. Each of the supporting members **32** is formed from a U-shaped wire form which is bent at approximately a **90** degree angle intermediate its ends to present a radial portion **34** and axial portion **36**. The bight portion **38** is secured to the outer peripheral surface of the core member **20**, as by welding, and the outer ends of its two arms are secured to the two parallel leg portions **40** of the oval-shaped wire form **26** as by welding.

The second side member **44** of the wire reel apparatus **10** is likewise formed from a plurality of elongated closed-loop wire forms **46** secured together as by welding in a criss-cross arrangement where the square-shaped center opening **48** is large enough to fit over the end of the core member **20**. Near each end of the wire form **46** there is provided a ramp portion **50**, which inter fits with the axial portion **36** of the support members **32** to prevent the wire from slipping between the support members **32** and the side member **44**.

The side member **44** is fastened to the supporting members **32** by means of diametrically opposed novel clamp units **60** each comprising a T-shaped clamping bolt **62** secured on two diagonally opposite supporting members **32** at the intersections of their radial and axial portions. Each T-shaped clamping bolt **62** includes an outwardly extending threaded rod portion **64** which extends through the U-shaped slots **66** of the clamping brackets **68** mounted on diagonally opposite ends of one of the oval-shaped wires **46**.

To assemble the wire reel apparatus, the wire coil package **12** is slid over the radial portion **36** of the tie members **32** and the side member **44** is then placed on the outer end of the core member **20**. Finally wing nuts **70** are screwed onto the threaded rod portions **64**.

Referring now to FIG. 2, there is shown the wire reel apparatus **10** of this invention mounted on a letoff machine **74** which could be of any of a number of commercially available type constructions. The frame **76** for letoff machine **74** includes an upright column member **78** on which reel shaft **80** is supported horizontally at its upper end. A hub **82** is rotatably mounted on shaft **80** by bearings **84** and has a flange **86** fixed on its inner end.

The diameter of cylindrical bore **22** is slightly larger than the outer diameter of hub **82** and is placed on hub **82**. Pin **88** by engaging wire form **26** retards rotation of the spool. Knurled nut **90** retains hub **20** in axial position.

Letoff machine **74** has a frictional drag device **92** imposing a constant drag on hub **82** and comprises cap screw **94** threaded into shaft **80**, washer **96**, spring washer **98** and keyed washer **100** connected together in

cavity **102**. By tightening cap screw **94**, spring washer **98** exerts a greater force on keyed washer **100** which bears tighter against flanged bearing **84**.

Furthermore, this invention is not limited for use with the particular wire coil package **12**, and is quite suitable with other coil packages, such as a standard cardboard core package which is strapped during shipping — the straps being removed once the package is on the wire reel apparatus.

While there has been shown and described a preferred embodiment of the invention, it will be understood that various modifications and rearrangements may be made therein without departing from the spirit and scope of the invention.

The invention claimed is:

1. Wire reel apparatus comprising a cylindrical core member having a cylindrical bore adapted to fit standard-sized spool letoffs, a first side member secured to one end of said core member having a plurality of spaced radial wire frames, a plurality of supporting members having a radial portion secured to said core member at its other end and having an axial portion on a concentric plane to said cylindrical bore secured to said wire frames to define a supporting surface for coils of wire, a second side member having a plurality of spaced radial wire frames, and clamping means for fastening said second side member to said supporting members in abutting relation with said radial portion.

2. A wire reel apparatus as defined in claim **1**, wherein said plurality of spaced radial wire frames of said first side member comprises a plurality of elongated closed-loop wires secured together in a criss-cross arrangement and wherein said plurality of supporting members comprises a plurality of U-shaped wire forms each having their bight portion secured to said core member and having the outer end portions of their arms bent at a ninety-degree angle and secured to the parallel legs of said closed-loop wires adjacent one of their curved ends.

3. A wire reel apparatus as defined in claim **2**, wherein said plurality of spaced radial wire frames of said second side member comprises a plurality of elongated closed-loop wires secured together in a criss-cross arrangement, a ramp formed in a transverse axial direction in both of parallel legs adjacent both of their curved ends to fit in alignment with said radial portions of said supporting members, and wherein said clamping means comprises a pair of clamping bolt brackets mounted on said radial portion of said supporting members and a pair of complementary clamping bolt receiving brackets mounted on said wire frames of said second side member.

* * * * *