July 7, 1959 W. P. KESSLER 2,893,069

SHOWER BATH FRAME LEVELING DEVICE

Filed Dec. 31, 1954

Fig. 1.

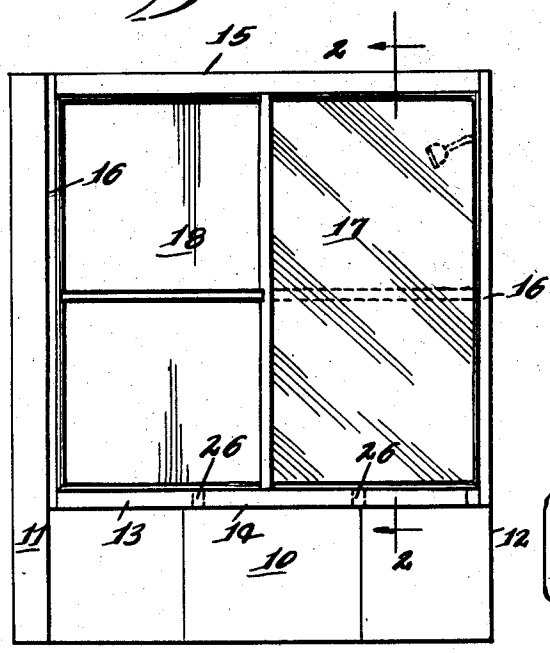

Fig. 2.

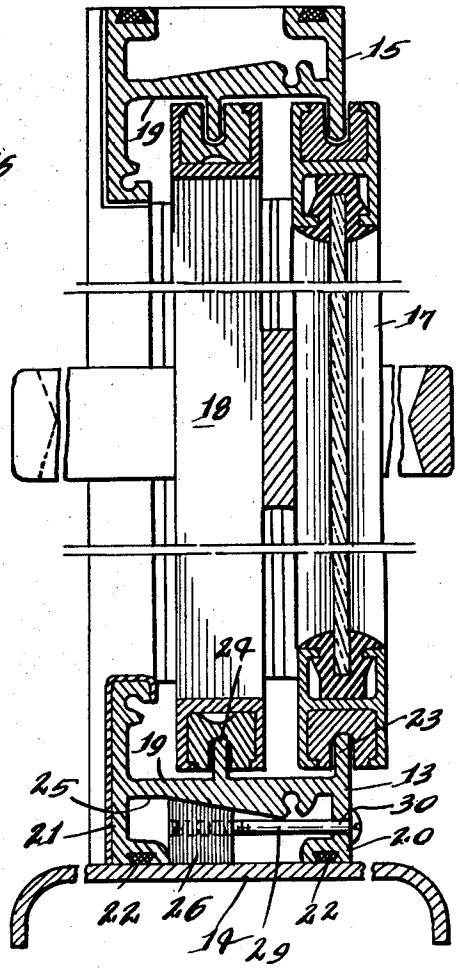

Fig. 3.

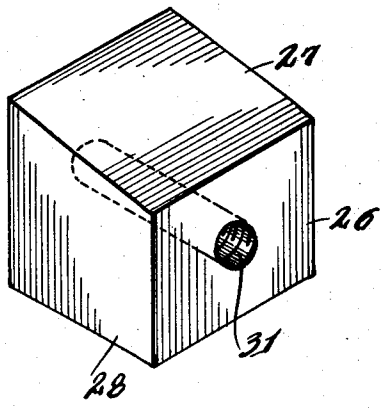

Inventor.
Ward P. Kessler.
By. Victor M. Ramsett.
his Attorney.

United States Patent Office

2,893,069

Patented July 7, 1959

2,893,069

SHOWER BATH FRAME LEVELING DEVICE

Ward P. Kessler, near Bristol, Ind., assignor, by mesne assignments, to Tusco Corporation, a corporation of Texas

Application December 31, 1954, Serial No. 479,068

5 Claims. (Cl. 20—11)

This invention relates generally to means for supporting the lower member of a shower bath enclosure frame in a level position so that the shower doors sliding thereon will be in plumb regardless of any sagging or distortions of the bath tub rim, or the floor, where the lower member is used as the threshold of a shower stall. And more particularly, my invention relates to the use of the principles of the inclined plane, providing a novel and inexpensive means for raising, lowering and supporting said lower frame member at various points throughout its length to prevent sagging or distortion.

Accordingly, an object of my invention is to provide a simple, inexpensive and effective means for aligning the bottom frame member of a shower bath enclosure so that it will be level throughout its length and as a result, support the doors sliding thereon in a plumb position.

Numerous other advantages, objects and novel features of the invention will be particularly mentioned or will become apparent from the further description herein. Referring to the accompanying drawings:

Figure 1 is a front view of a shower bath enclosure installed on and above the bath tub outer and upper rim.

Figure 2 is a cross-sectional view of part of said enclosure taken on the line 2—2 of Figure 1.

Figure 3 is a perspective view of the slidable block forming part of my invention.

Corresponding numerals of reference refer to like parts throughout the different views of the drawings.

While a detailed description of the invention follows, it is to be understood that the phraseology or terminology employed is for the purpose of description only and not of limitation beyond the requirements of the prior art.

In Figure 1, the bath tub **10** is shown installed in the tub recess between the end walls **11** and **12**. The shower bath enclosure consists of the lower horizontal frame member **13**, resting on top of the outer and upper rim **14** of the tub **10**; the upper horizontal frame member **15**; the vertical side rails **16**, **16**; and the parallel, and slightly overlapping, sliding doors **17** and **18**.

The upper and lower horizontal frame members are identical. Referring to Figure 2, the lower horizontal frame member **13** is formed, preferably by extrusion, of aluminum or other metal alloy, and consists of the horizontal longitudinally extending web **19** with the downwardly depending legs **20** and **21** terminating with end channels for the retention of a calking material **22**, **22**. It is to be understood that any of the frame members take the form of a bar of the desired length, and that its integral parts herein described extend the entire length of said member. The guide tracks **23** and **24** extend upwardly from and normal to, in spaced apart relationship, the upper surface of the web **19**. As shown, the doors **17** and **18** are supported by and glide upon said guide tracks **23** and **24**, respectively. The lower surface **25** of the web **19** is formed on a downwardly inclined plane toward the leg **20**. In order to compensate for any

sagging or distortion in the bath tub, and particularly its rim on which the frame member **13** rests, I use one or more, preferably two, wedging blocks **26**, in spaced apart relationship. The block **26**, rectangular in form, has its upper side **27**, inclined downwardly in a plane conforming to the same angle of declination as the lower surface **25** of the web **19**.

The block **26** is placed in the space below the web **19** and between the legs **20** and **21** of the member **13**, with its inclined surface **27** adjacent to and conforming to the declination of the lower surface **25** of the web **19**, with its bottom side **28** resting upon and in contact with the surface of the bath tub rim **14**. It is obvious that the height of the block **26** should not exceed or extend beyond the bottom of the legs **20** and **21**. In order to level the frame member **13**, at the point of sagging, I raise it by inserting the screw or threaded bolt **29** through the hole **30** drilled in the leg **20** engaging the threaded aperture **31** in the block **26**, thereby drawing the block **26** toward the leg **20** and simultaneously raising the frame member **13** to the desired extent at that point by the pressure exerted against its under surface **25**. The block **26** is of composition material such as Uylasint or other rigid plastic material. In this manner, I can level the frame member **13** throughout its length so that the doors **17** and **18** are in plumb, slide easily and present a sightly appearance.

Having shown and described my invention, I claim:

1. In a shower bath enclosure installed between opposite side walls of a bath recess, said enclosure having horizontal and vertical frame members detachably joined at their ends, with parallel panel doors disposed within said frame members and slidably resting upon the lower horizontal frame member which is supported upon the surface of an adjacent bottom member, a channeled lower horizontal frame member having a longitudinal central web with legs depending from its opposite side margins and with the bottom side of said web inclined in a plane downwardly towards one of said legs which is of lesser height than its opposite leg, an adjacent bottom member in contact with said legs supporting said lower horizontal frame member, a leveling block substantially rectangular in form having its upper side inclined at the same angle of declination as said bottom side of said lower horizontal frame member and disposed between said legs with the surface of its upper side in slidable contact with the inclined bottom side of said web and its lower side in slidable contact with the surface of said adjacent bottom member, and means for moving said leveling block between said legs in contact with the bottom side of said web and the surface of said adjacent bottom member.

2. A shower bath frame leveling device comprising a channeled horizontal lower member of said frame having a central web with legs depending from its opposite side margins contacting a supporting bottom member and with the bottom side of said web inclined downwardly in a plane towards one of its said legs of lesser height than its opposite leg, a bottom member supporting said lower frame member, a leveling block disposed between said legs having one side inclined in a plane corresponding to the angle of declination of said bottom side of said web with which it is in contact and its opposite side in slidable contact with the adjacent surface of said bottom member, and means for slidably moving said leveling block towards or away from said shorter leg.

3. A shower bath frame leveling device comprising a channeled horizontal lower member of said frame having a central longitudinal web with legs depending from its opposite side margins in contact with a supporting bottom member and with the bottom side of said web inclined downwardly in a plane towards one of said legs shorter

than the other leg, a bottom member supporting said lower frame member, a substantially rectangular leveling block having one side inclined in a plane corresponding to the angle of declination of said bottom side of said web disposed between said legs, the inclined sides of said web and block and the opposite side of said block and the upper surface of said bottom member being in slidable contact, and an adjusting means movably attached to one of said legs and said block for raising or lowering said frame member.

4. A shower bath frame leveling device comprising a channeled horizontal lower member of said frame having a longitudinal central web with legs depending from its opposite side margins and with the bottom side of said web inclined downwardly in a plane towards one of said legs which is shorter than the other leg, both said legs in contact with and resting upon the upper surface of an adjacent bottom member, a bottom member supporting said lower frame member, at least one leveling block disposed between said legs and within the length of said frame member having one side inclined in a plane corresponding to the angle of declination of the bottom side of said web with which it is in contact and with its opposite side in slidable contact with said upper surface of said bottom member, and means for moving said block from one leg towards the other.

5. A shower bath frame leveling device comprising a

channeled horizontal lower member of said frame having a central longitudinal web with legs depending from its opposite side margins and with the bottom side of said web inclined downwardly in a plane towards one of said legs which is shorter than the other leg, both said legs resting upon the upper surface of an adjacent bottom member, a bottom member supporting said lower frame member, a leveling means disposed between said legs and within the length of said frame member, the inclined side of said web and the upper surface of said leveling means being in contact with each other and the lower surface of said leveling means and the upper surface of said bottom member being in contact with each other, and means for moving said leveling means thereby raising or lowering and supporting said frame member at its point of contact with said leveling means.

References Cited in the file of this patent

UNITED STATES PATENTS

332,185	Braun	Dec. 8, 1885
1,139,195	Krause	May 11, 1915
1,595,827	Frisque	Aug. 10, 1926
1,724,186	Fox	Aug. 13, 1929
1,794,798	Sarr	Mar. 3, 1931
2,374,490	Lehman	Apr. 24, 1945
2,571,263	Lee et al.	Oct. 16, 1951