Oct. 18, 1955 A. LYSHOLM ET AL 2,720,935

SILENCING OF SOUND

Filed Aug. 30, 1950 5 Sheets-Sheet 1

Fig. 1.

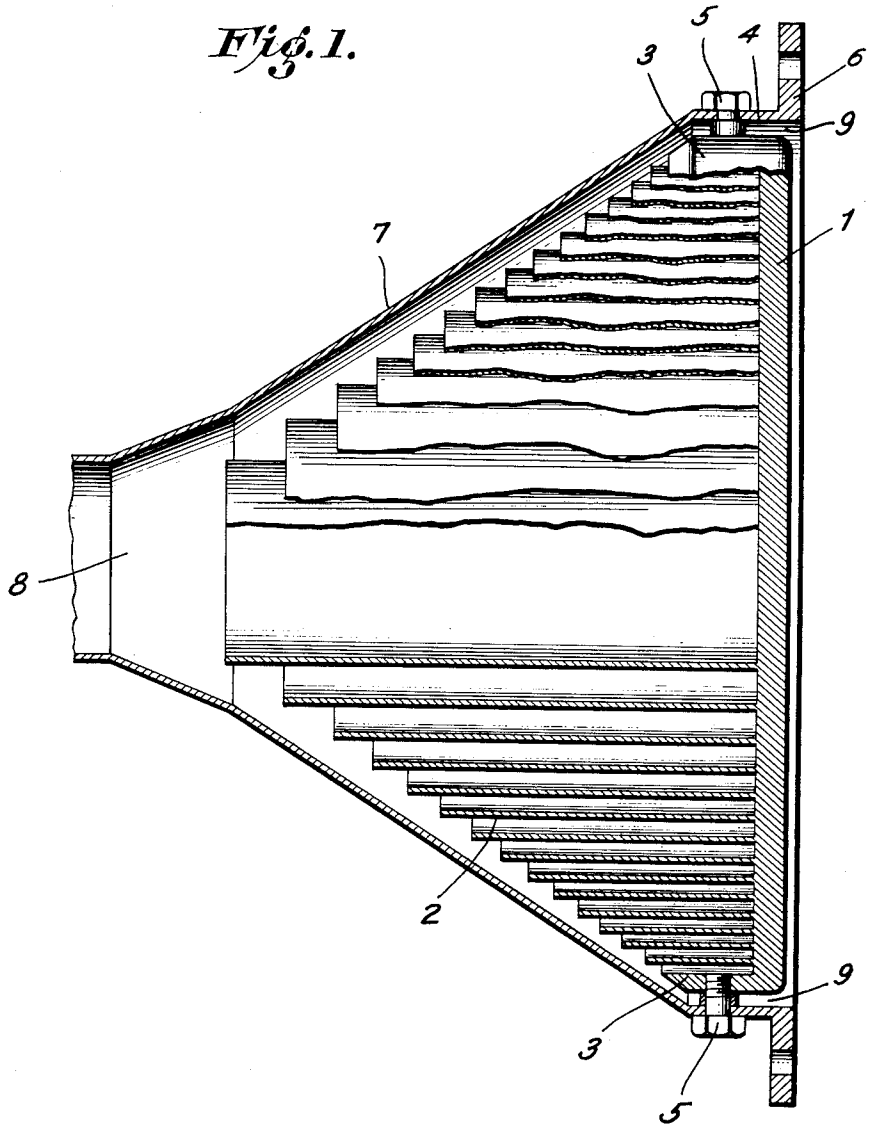

Inventors

ALF LYSHOLM,
GUSTAV KARL WILLIAM BOESTAD,
HANS ROBERT NILSSON

By Jarvis C. Marble
Attorney

SILENCING OF SOUND

Filed Aug. 30, 1950 5 Sheets-Sheet 2

Fig. 2.

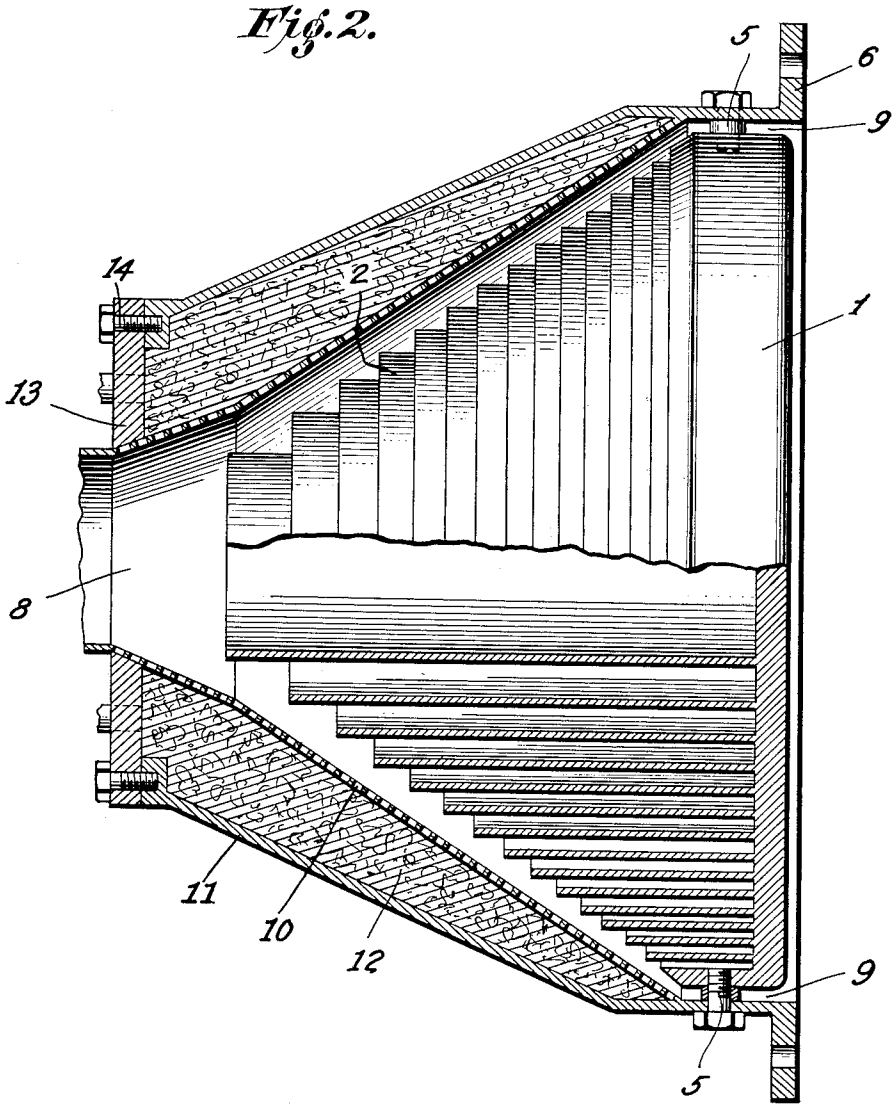

Inventors
ALF LYSHOLM,
GUSTAV KARL WILLIAM BOESTAD
HANS ROBERT NILSSON

By Jarvis C. Marble
Attorney

SILENCING OF SOUND

Filed Aug. 30, 1950 5 Sheets-Sheet 3

Fig. 2a.

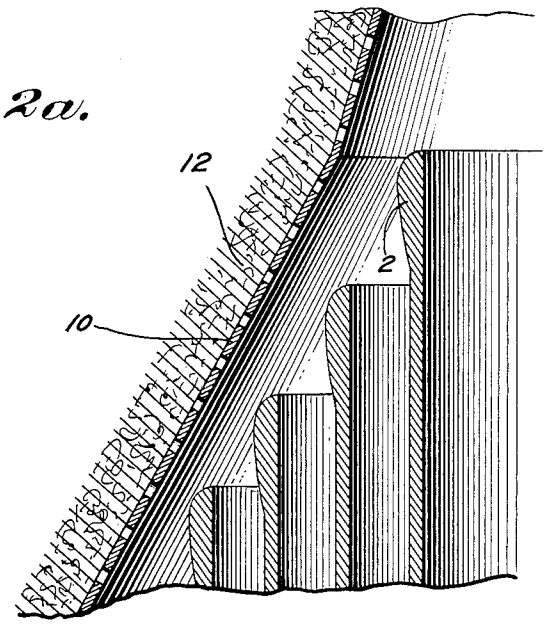

Fig. 3a.

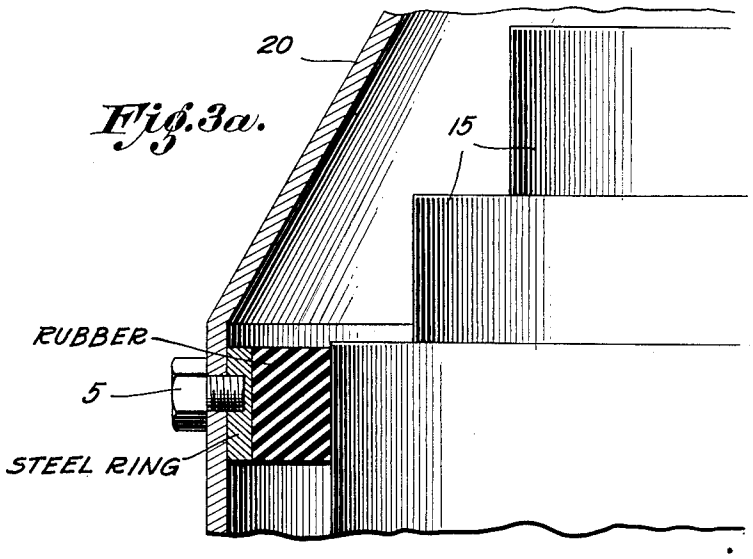

Inventors
ALF LYSHOLM,
GUSTAV KARL WILLIAM BOESTAD,
HANS ROBERT NILSSON

By Jarvis C. Marble
Attorney

Oct. 18, 1955 A. LYSHOLM ET AL 2,720,935

SILENCING OF SOUND

Filed Aug. 30, 1950 5 Sheets-Sheet 4

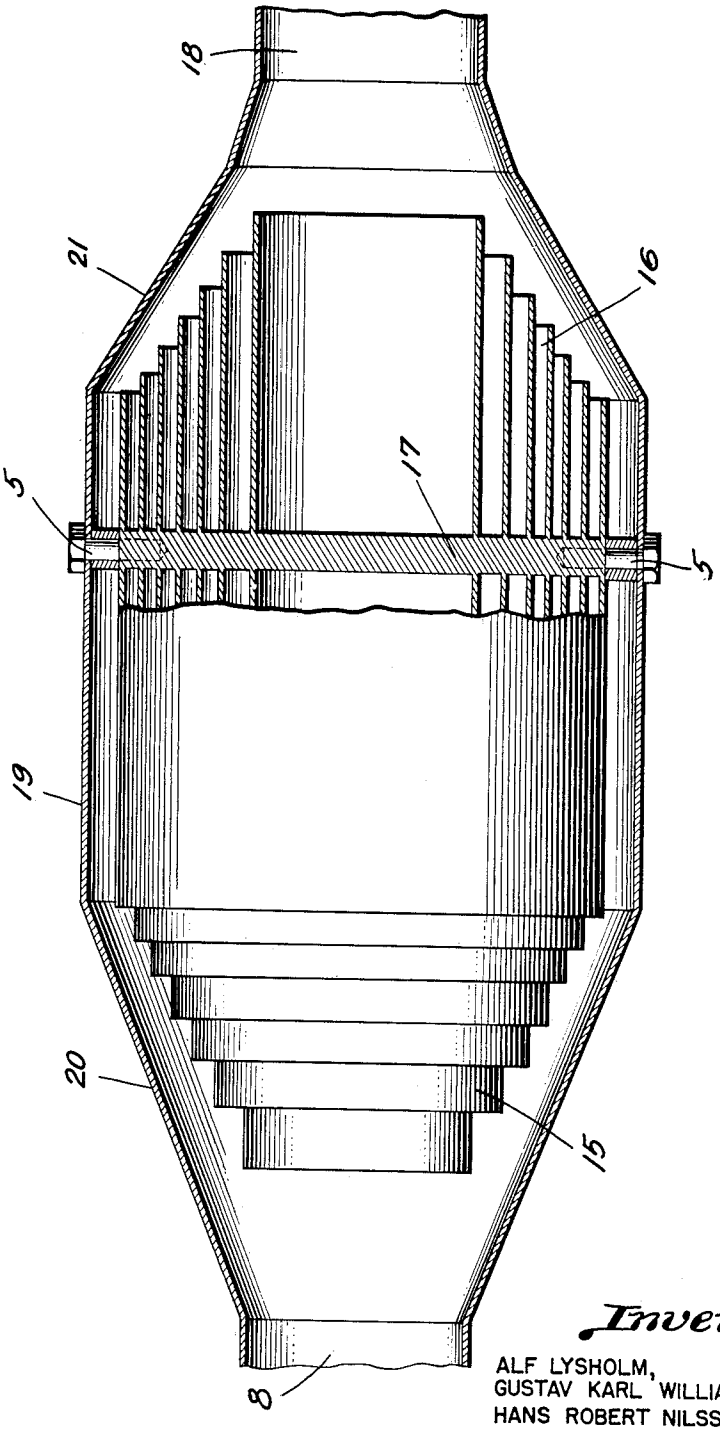

Fig. 3.

Inventors

ALF LYSHOLM,
GUSTAV KARL WILLIAM BOESTAD,
HANS ROBERT NILSSON

By Jarvis C. Marble
Attorney

Oct. 18, 1955 A. LYSHOLM ET AL 2,720,935

SILENCING OF SOUND

Filed Aug. 30, 1950 5 Sheets-Sheet 5

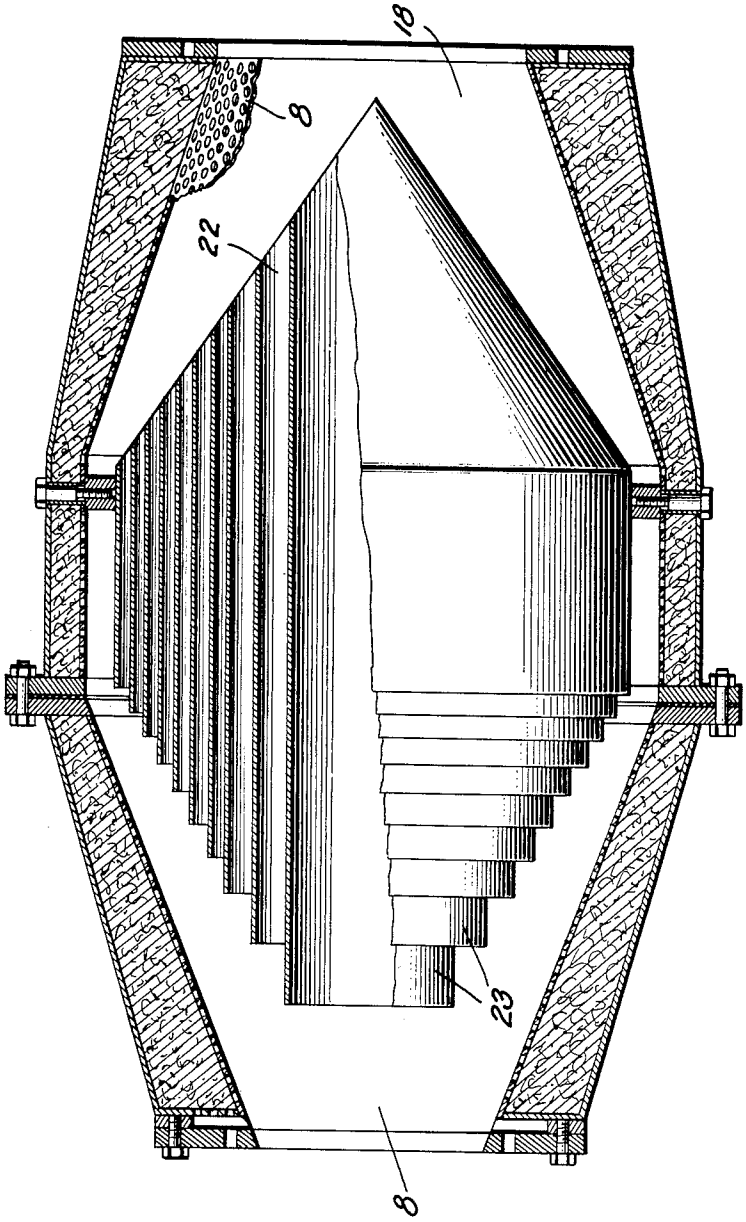

Fig. 4.

Inventors

ALF LYSHOLM,
GUSTAV KARL WILLIAM BOESTAD,
HANS ROBERT NILSSON

By James C. Marble
Attorney

United States Patent Office

2,720,935

Patented Oct. 18, 1955

1

2,720,935

SILENCING OF SOUND

Alf Lysholm, Goteborg, Gustav Karl William Boestad, Lidingo, and Hans Robert Nilsson, Stockholm, Sweden, assignors, by mesne assignments, to Jarvis C. Marble, New York, N. Y., Leslie M. Merrill, Westfield, N. J., and Percy H. Batten, Racine, Wis., trustees

Application August 30, 1950, Serial No. 187,114

23 Claims. (Cl. 181—56)

The present invention relates to the silencing of sound and has particular reference to the silencing of sound resulting from the intake or exhaust of gaseous media to or from displacement engines such as internal combustion engines, compressors and similar machines and dynamic engines such as rotary centrifugal or axial flow compressors and the like.

Engines of the kind mentioned, either because of the intermittent nature of their operation or because of the high flow velocities developed in the blading systems, emit strong sound comprising varying tone frequencies which bear a substantially fixed relation to the speed of operation of the machine. The noise level of such sound is often so high as to be intolerable when the machine is located in normal locations and in extreme cases may be such as to be physically injurious to humans. Consequently, effort is made to absorb the sound energy by appropriate silencing means. Since only an extremely small portion of the sound energy is transmitted to the exterior of the machine via the material of the housing, while by far the greater part is emitted via the supply or discharge conduit, the most important factor to be considered in obtaining the desired silencing is that of providing effective silencing means for the conduits to prevent emission of objectionable sound waves from the conduit mouths.

Earlier known embodiments of silencers for the above-mentioned purposes base their construction either on the fact that a medium flowing in a conduit, while passing through a grid with small slits or due to abrupt changes in the flow area and/or the direction of the flowing medium, or by having the flow area divided into a great number of tubular channels with small diameter, loses part of its sound or oscillation energy; or the medium is caused to flow through a double-walled tube, the inner wall of which is perforated and the space between the two walls is filled with a porous sound-absorbing mass.

Silencers of the first mentioned kind have, however, a relatively high flow resistance, which in turn results in a rather considerable increase in the power consumption, or decrease in the power output, as the case may be, of the machine involved. Silencers of the latter type with perforated inner wall and sound-absorbing mass have a smaller flow resistance than silencers of the first mentioned kind, but their use is limited to relatively high frequencies, since they cannot suppress the lower frequencies. Furthermore, he latter type of silencer requires more space.

A silencer embodying the present invention, which is particularly adapted to be built into conduits as well as into mouth silencers, effects, practically without any additional flow losses of the working fluid, an effective sound absorption of the tone frequencies which it is desired to eliminate. At the same time the construction is characterized by great simplicity and it requires small space in comparison with known devices for the desired purpose.

Fundamentally, according to the invention, members

2

are used for damping the oscillation energy in a medium, the natural frequency of said members coinciding with the frequencies of the oscillating medium, and the silencing method according to the invention is substantially characterized by the fact that the particles of the oscillating medium are caused to activate chambers communicating with a narrow or slit-shaped flow channel for the oscillating medium, the natural frequencies of said chambers entirely or partially coinciding with the frequencies of the oscillating medium.

In order to obtain such members the invention provides for the use of open pipes closed at one end, said pipes being filled by the medium to be silenced and brought into oscillation by the same, said oscillations extinguishing by resonance the tone frequencies which correspond to the natural number of oscillations of the pipes. Such pipes being easy to calculate for different frequencies (their length should be equal to ¼ of the wave length of the oscillation to be damped) and cheap to manufacture, it does not present any difficulties to build silencers for the frequencies in question.

The invention will be described hereinafter with reference to the accompanying drawings, which by way of example illustrate some preferred embodiments of silencers according to the invention.

In the drawings,

Fig. 1 is a longitudinal section of an embodiment of a silencer according to the invention;

Fig. 2 is a modification of said embodiment;

Fig. 2*a* is a fragmentary section on enlarged scale showing a modified form of structure applicable to the tubular elements shown in the remaining figures;

Fig. 3 shows, likewise in longitudinal section, another embodiment;

Fig. 3*a* is a fragmentary section on enlarged scale showing a modified form of mounting for the silencing structure shown in the remaining figures; and

Fig. 4 shows a further embodiment.

The silencer illustrated in Fig. 1 consists of a circular plate **1**, to one side of which is fixed a number of concentrically arranged cylindrical walls **2** of varying length, said walls forming pipes closed at one end by the plate **1**, the innermost pipe being the longest one and the outermost pipe being the shortest one, said pipes having different natural frequencies determined by their respective lengths. Moreover, the pipes are designed in such a manner that the cross sectional areas of the different chambers formed by the pipes are substantially of equal value and preferably about half as great as the sectional area of the flow through the silencer for the oscillating medium. The latter should be of substantially constant cross sectional area through the silencer. The circular plate **1** carrying the pipes is formed at its circumference with a flange **3** projecting upwardly in the longitudinal direction of the pipes and intended to form a support for the plate **1** in a surrounding housing **4** by means of a number of radially arranged bolts **5**. This housing **4** is provided with a connecting flange **6** and in the opposite direction connected with a conically shaped casing **7** which is provided with an opening **8**. When such a silencer is used as a mouth silencer its opening **8** is thus connected to the inlet conduit of the machine the sound waves of which the silencer is intended to damp, the air flowing through the silencer entering the narrow annular opening **9** between the flange **3** and the housing **4**. The sound waves emanating from the machine are then damped by the pipes which are filled with stationary air. However, this type of silencer may also with advantage be connected to the outlet conduit of the machine by connecting said conduit to the opening **8** of the conical casing **7**. The sound waves from the machine during the flow of the gas or the air through the silencer will, just as in the previous

case, be damped by means of the pipes which are open towards the outlet of the machine.

The embodiment shown in Fig. 2 in which elements corresponding to those in Fig. 1 are designated by the same reference numerals, differs from the embodiment according to Fig. 1 substantially in that the conical casing is provided with double walls. Said casing consists of an inner wall **10**, which is provided with perforations, and an outer housing **11** between which is a space filled with a porous sound-absorbing material **12**, e. g. asbestos, glass wool or the like, for damping those frequencies which are not extinguished by the pipes. Numeral **13** denotes a cover which by means of screws **14** is screwed on to the housing **11** and rests against the end portion of the inner wall **10**.

The embodiment illustrated in Fig. 3 acts fundamentally in the same manner as the embodiments described in Figs. 1 and 2. The silencer shown in Fig. 3, which is provided with pipes **15**, **16** fixed on both sides of a cylindrical plate **17** and thus have their openings directed in opposite directions, offers, however, as mentioned above, that advantage over the other embodiments that the volume becomes small for a certain number of pipes of given dimensions. By this arrangement the diameter of the silencer can thus be considerably reduced. Furthermore, due to the double cone shape obtained according to this embodiment the inlet and outlet openings **8** and **18** respectively may be made equal. Moreover, in this embodiment the outer housing consists of a cylindrical part **19** and of two conical casings **20** and **21** connected to said part **19**.

The embodiment of silencer shown in Fig. 4 is also characterized by a small building-in volume, which is obtained due to the fact that the base plate (**1** and **17**, respectively, in Figs. 1–3) which carries the different open pipes, is replaced by a conically shaped plate **22** to which the pipes **23** are fixed and arranged in such a manner that the silencer body also in this case has a double cone shape. Like the embodiment according to Fig. 3, this embodiment also can with advantage be built in at any point in a conduit. Also in this case the inlets as well as the outlets **8** and **18** of the same can be made equal and provided with flanges for direct connection. Moreover, this embodiment offers the advantage that the conically shaped plate **22** which carries the open pipes **23**, is very rigid although it is of considerably smaller thickness than the circular plates **1** and **17**, respectively, which is used in the other embodiments for carrying the pipes. Furthermore, the conical shape suitable for the flow is obtained automatically in this case.

In all the embodiments the conical silencer body is surrounded by a housing in such a manner that a flow channel is formed between the housing and the envelope surface touching the free end edges of the different pipes. According to the invention this channel should be dimensioned in such a manner that the radial distance from a free pipe edge to said housing always is small in relation to the length of the respective pipe, the length of the pipe preferably being at least several times that of said radial distance.

In preferred embodiments, the length of the sound-damping chambers form a series with the lengths 1, ½, ⅓, ¼, ⅕ and so on, where 1 corresponds to ¼ of the wave length of the fundamental tone in the oscillation which it is desired to damp and ½ corresponds to ¼ of the first harmonic and so on, said arrangement being suitable when the oscillation to be damped has known and constant wave lengths emanating, for example, from a compressor driven at constant speed. Furthermore, the free end portions of the pipes may be streamlined, e. g. by applying a streamlined thickened portion on the outside of the pipes, as shown in Fig. 2*a*. By this arrangement it is obtained that at a certain pressure drop in the silencer great flow velocities can be maintained and that in connection therewith according to the principle of the invention all the dimensions, except the length, can be reduced. The invention comprises also such an embodiment in which the oscillating chambers connected to a slit-shaped channel are placed approximately at a right angle to the flow direction.

Naturally, the invention is not restricted to the embodiments now described and disclosed but it may be varied in many ways within the scope of the invention. For example, instead of concentric pipes, parallel pipes or cells arranged beside each other may be used. Furthermore, the inner sound-absorbing body may be carried by the surrounding housing by means of sound-insulating members, e. g. so-called silent blocks, as shown in Fig. 3*a*.

What is claimed is:

1. A silencer for damping sound producing oscillations in a body of gaseous fluid comprising wall means providing a path of flow for fluid, and means within said wall means providing a plurality of coaxial annular nested chambers of constant cross sectional area for the major portions of their lengths closed at one end and open at the other and having different natural frequencies, said chambers having their open ends in communication with said path of flow at places closely adjacent to said wall means.

2. A silencer as defined in claim 18, in which the last mentioned means provides a series of chambers having lengths in the relation of 1, ½, ⅓, ¼, and ⅕ and so on where 1 corresponds to ¼ of the wave length of the fundamental tone of a sound producing oscillation of said fluid, ½ corresponds to ¼ of the wave length of the first harmonic and so on.

3. A silencer of the character described comprising a casing and a plurality of cylindrical pipes arranged coaxially in radial spaced relation within said casing, said pipes being closed at one end and open at the other end and being arranged with their open ends spaced from said casing to provide a path of flow of relatively narrow cross section as compared with its cross sectional width for flow of a gaseous fluid through the silencer between said casing and the open ends of said pipes.

4. A silencer as defined in claim 3, in which said pipes are of different lengths bearing a predetermined relation to the fundamental tone of a known sound producing oscillation of the fluid to be passed through said path of flow.

5. A silencer as defined in claim 3, in which said pipes are of progressively different lengths arranged with the open ends thereof in axially spaced relation so that the envelope surface of the open ends of the pipes varies in diameter along its length.

6. A silencer as defined in claim 5, in which said casing encircles the envelope of the open ends of said pipes in spaced relation thereto to provide an annular path of flow varying in diameter with the variation in diameter of said envelope.

7. A silencer of the character described comprising a casing and a plurality of cylindrical pipes arranged coaxially in radial spaced relation within said casing, said pipes being closed at one end and open at the other end and being arranged with their open ends spaced from said casing to provide a path of flow of relatively narrow cross section as compared with its cross sectional width for flow of a gaseous fluid through the silencer between said casing and the open ends of said pipes, said pipes being of progressively different lengths arranged with the open ends thereof in axially spaced relation so that the envelope surface of the open ends of the pipes varies in diameter along its length, said casing encircling said envelope in spaced relation thereto to provide an annular path of flow varying in diameter with the variation in diameter of said envelope and said envelope and the portion of the casing surrounding the same being of conical form.

8. A silencer as defined in claim 7, in which the radial distance between said envelope and the surrounding portion of the casing varies inversely with the diameter of the envelope.

9. A silencer as defined in claim 8, in which the lengths

of the pipes are at least several times the radial distance between the envelope and the casing.

10. In a silencer of the character described a casing and a plurality of cylindrical pipes within said casing, said pipes being closed at one end and open at the other and of different lengths and providing resonating chambers of substantially equal cross sectional area and of different natural frequencies, the open ends of said pipes being spaced from the casing to provide a path of flow therebetween for a sound producing oscillating gaseous fluid.

11. A silencer of the character described comprising a casing open at both ends for flow of a sound producing gaseous medium, a supporting member mounted within said casing and extending transversely thereof in generally spaced relation to the casing to provide for flow of fluid past the perimeter of said member, and a plurality of pipe elements of different lengths extending axially of the casing and supported at one end by said member, the supported ends of said elements being closed and the opposite ends being open and in spaced relation to said casing to provide an annular path of flow for said fluid past the open ends of said pipe elements.

12. A silencer as defined in claim 11, in which said pipe elements are arranged coaxially in radially spaced relation to provide a series of annular resonating chambers of different lengths therebetween.

13. A silencer as defined in claim 12, in which the diameters of said pipe elements are so related as to provide resonating chambers of substantially equal cross sectional area.

14. A silencer as defined in claim 12, in which said supporting member comprises a plate-like structure extending transversely of said casing normal to the axis thereof.

15. A silencer as defined in claim 14, in which said pip elements comprise two groups extending respectively in opposite directions from the opposite sides of said supporting member.

16. A silencer as defined in claim 12, in which said supporting member is of generally conical form.

17. A silencer as defined in claim 16, in which the lengths of said pipe elements are so related that the envelope of the open ends of the pipes is of generally conical form and with the apex thereof pointing axially in the direction opposite that of the apex of said supporting member.

18. A silencer of the character described comprising a casing having radially spaced outer and inner walls, the inner one of said walls being perforated, sound deadening material between said walls and a plurality of pipe elements within said casing, said pipe elements being closed at one end and open at the other and extending axially of said casing with their open ends in spaced relation to and confronting the perforated inner wall of the casing.

19. A silencer of the character described comprising a casing and a plurality of coaxially nested pipe elements of different lengths located in said casing, said elements being closed at one end and open at the other and providing resonating chambers of substantially constant and equal cross sectional area for the major portions of their lengths, the open ends of said pipe elements being in spaced relation to said casing to provide between the pipe elements and the casing a path of flow for a sound producing oscillating gaseous fluid, the spacing of said open ends from said casing being such that the cross sectional flow area of said path of flow is substantially constant and substantially double that of the cross sectional area of any one of said chambers.

20. A silencer of the character described comprising a casing and a plurality of coaxially nested pipe elements of different lengths located in said casing, said elements being closed at one end and open at the other end and providing resonating chambers of substantially constant and equal cross sectional area for the major portions of their lengths, the open ends of said pipe elements being in spaced relation to said casing to provide between the pipe elements and the casing a path of flow for a sound-producing oscillating gaseous fluid, said pipe elements further being arranged with the open ends thereof axially spaced so that the envelope of the open ends is substantially conical, the portion of the casing confronting said envelope being also substantially conical, whereby to provide a generally conical annular path of flow for said fluid, the radial extent of said annular path of flow varying inversely with the diameter of the annulus to provide a substantially constant cross sectional flow area for fluid along the length of the annulus and the spacing of said open ends from said casing being such that the cross sectional flow area is substantially double that of the cross sectional area of any one of said chambers.

21. A silencer of the character described comprising a casing having radially spaced outer and inner walls, the inner one of said walls being perforated and of varying diameter axially of the casing, sound-deadening material between said walls and a plurality of cylindrical pipe elements of different diameters arranged coaxially in radially spaced relation within said casing, said pipe elements being closed at one end and open at the other end and extending axially of said casing with their open ends in spaced relation to and confronting the perforated inner wall of the casing, said open ends being so located relative to each other that the envelope thereof varies in diameter with the variation in diameter of said inner wall.

22. A silencer as defined in claim 21 in which said inner wall and said envelope are substantially conical.

23. A silencer defined in claim 22, in which the radial distance between said envelope and said inner wall varies inversely with the diameters thereof.

References Cited in the file of this patent

UNITED STATES PATENTS

806,714	Porter	Dec. 5, 1905
1,475,769	Meyer	Nov. 27, 1923
1,866,004	Beamer	July 5, 1932
2,017,744	Bourne	Oct. 15, 1935
2,017,748	Bourne	Oct. 15, 1935
2,075,265	Bourne	Mar. 30, 1937
2,325,352	Wilson	July 27, 1943

FOREIGN PATENTS

292,323	Great Britain	June 21, 1928
344,350	Italy	Nov. 5, 1936