United States Patent [19]

Beusink et al.

[11] **3,815,485**

[45] **June 11, 1974**

[54] **METHOD AND DEVICE FOR VENTILATING A SPACE**

[75] Inventors: **Johannes Thedorus Antonius Beusink,** Lichtenvoorde; **Bernard Joseph Buesink,** Oerle, both of Netherlands

[73] Assignee: **Integra Lichtenvoorde N.V.** Netherlands

[22] Filed: **Nov. 30, 1971**

[21] Appl. No.: **203,270**

[30] **Foreign Application Priority Data**

Dec. 2, 1970 Netherlands 7017643

[52] **U.S. Cl.** **98/39,** 28/119

[51] **Int. Cl.** **F24f 3/02**

[58] **Field of Search** ..... 98/39, 40 C, 33 R, 119

[56] **References Cited**

UNITED STATES PATENTS

1,630,317	5/1927	Skonier	98/33 R
1,941,425	12/1933	Young	98/40 C
2,489,515	11/1949	Blake et al.	98/33 R
3,307,579	3/1967	Beddoes	137/624.13
3,363,532	1/1968	Horneff	98/33 R
3,474,720	10/1969	Qualley et al.	98/33 R
3,541,945	11/1970	Wexler	98/119
3,667,370	6/1972	Noble	98/33 R

Primary Examiner—William E. Wayner
Assistant Examiner—William E. Tapolcai, Jr.
Attorney, Agent, or Firm—Breitenfeld & Levine

[57] **ABSTRACT**

A method and device for ventilating a space containing living beings such as animals by supplying a gaseous fluid through a plurality of apertures at a high speed, thereby periodically interrupting the gas supply such that between two successive blowing periods, the gas stream is almost completely coming to a standstill.

2 Claims, 8 Drawing Figures

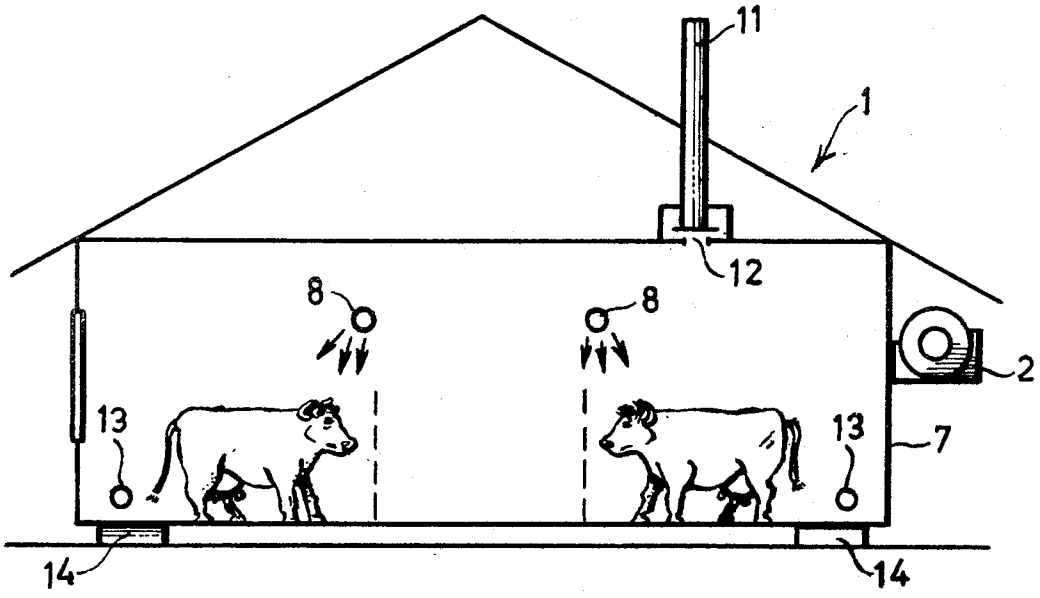

PATENTED JUN 11 1974 3,815,485

Fig. 1.

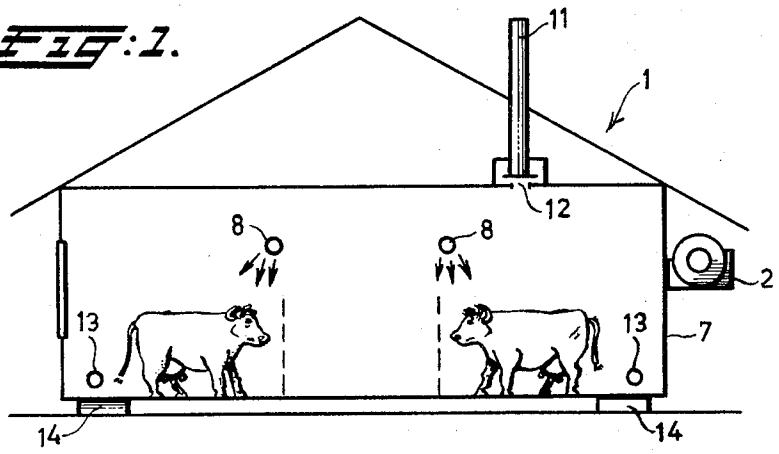

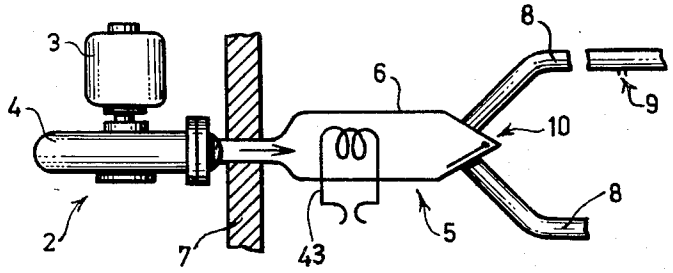

Fig. 2.

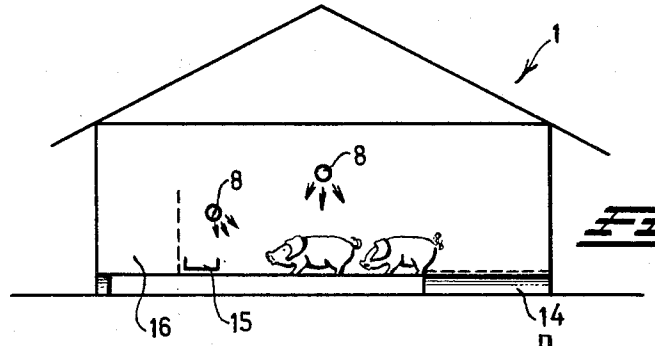

Fig. 3

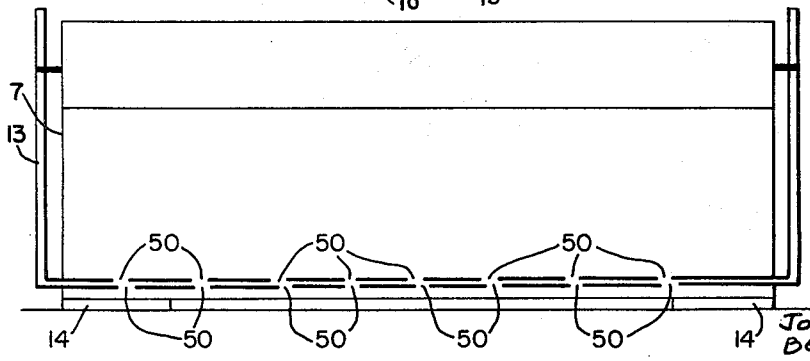

Fig. 4

INVENTORS:
JOHANNES T. A. BEUSINK
BERNARD J. BEUSINK
BY
ATTORNEY

Fig: 4.

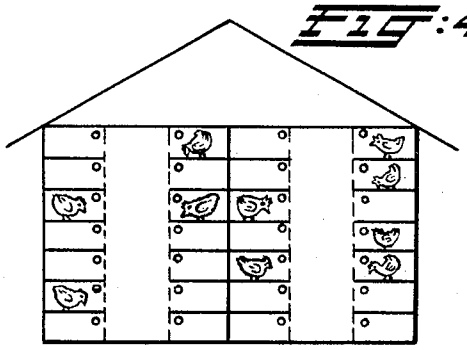

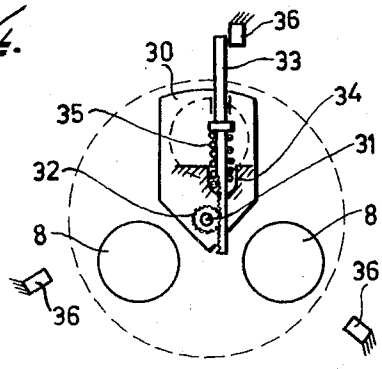

Fig: 6.

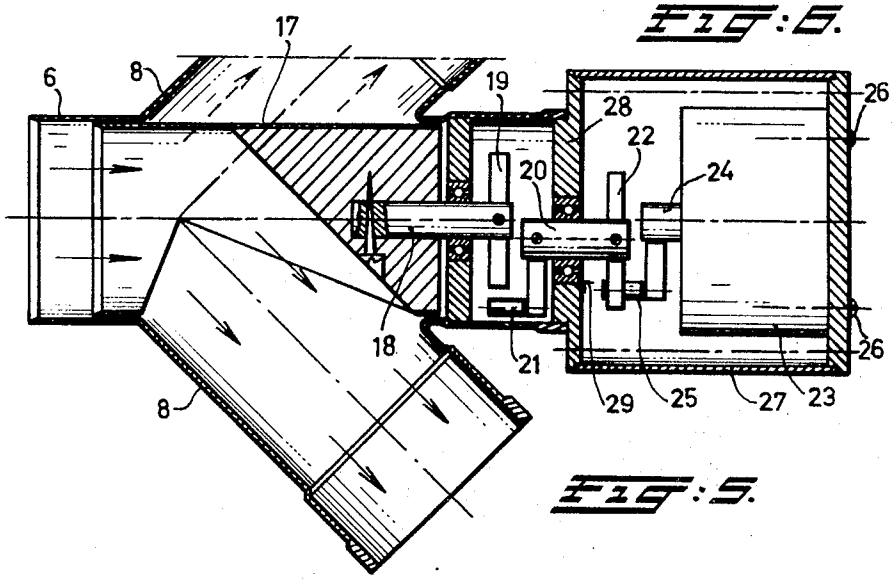

Fig: 5.

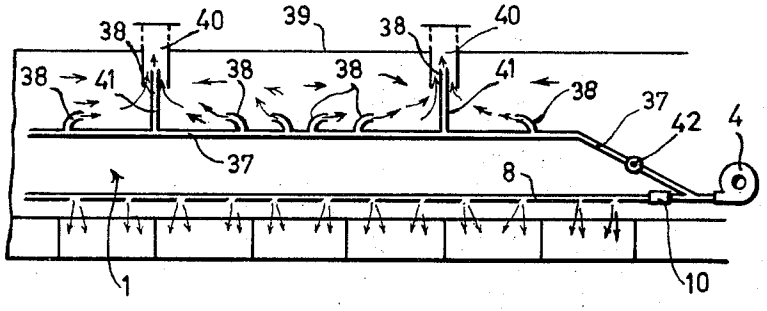

Fig: 7.

INVENTORS:
JOHANNES T.A. BEUSINK
BERNARD J. BEUSINK
BY
Alan N. Levine
ATTORNEY

METHOD AND DEVICE FOR VENTILATING A SPACE

BACKGROUND OF THE INVENTION

The invention relates to a method for ventilating a space in which are a number of living beings, such as animals, whereby air under overpressure is introduced from the outside into the space. In such a method it is known to apply one or more ventilators, by which means, fresh air, pours into the space via some openings. This method has some drawbacks, such as the risk of draught, especially when the external temperature is low. In order to transfer sufficient gas to the beings, (e.g. oxygen to the animals) in the space, the rate at which the gas is moving should therefore be limited, but the yield of gas should be considerable.

SUMMARY OF THE INVENTION

It is an object of the invention to provide a method by starting from another principle in order to avoid the aforementioned difficulties. This object is attained according to the invention, in that the supply of gas directed towards the beings is effected in a pulsing way with a velocity greater than 2 m/sec. and with a frequency ranging from one pulsation per 20 seconds to three pulsations per second, in such a manner that between two successive blowing periods the ejected air almost comes to a standstill.

Characteristic for the invention is that the velocity of the gas supply is a multiple of the one so far deemed tolerable, in combination with a periodical interruption resulting in a standstill of the supplied gas.

Due to these features it is possible for a stable to determine the quantity of required fresh air by the need for oxygen of the animals present since the fresh air is exclusively transferred to the location at which the animals breathe and where the oxygen is wanted. Owing to this principle the necessary quantity of air is a fraction of the quantity required according to the conventional method. This does not only imply an economy on the totally required energy but results also in a neglectible influence by a varying external temperature (warm by day and cold at night) upon the temperature within the space.

The rather small consumption of gas in the method according to the invention enables a cooling of the supplied gas in summer and a heating of the same in winter time. The temperature in the stable is substantially determined by the delivery of heat from the present animals and the insulating capacity of the wall and the roof of the space. The method according to the invention avoids the unfavourable effect of the force of the wind and the direction of the wind on the conventional ventilation system, when the ventilators are on the weather side or the lee side of the space. This is realised owing to the considerably higher pressure level that is applied according to the invention.

A further considerable advantage of the invention is that the volume required per being in the ventilated space can be small, compared with the known method. The directed and pulsing supply of gas allows a supply of dosed medicaments to the beings because these medicaments get only to the locations where the animals breathe or the plants grow. Mostly the animals will occupy a fixed place in the space (stable) but it has been shown by experiment that free going animals, like pigs,

voluntarily take up such a position that the pulsing current of air can be effectively used.

The invention is further embodied in a device having a pipe system with a periodically movable shut off valve and with a plurality of small outflow apertures within the space, directed toward the locations, where the beings are positioned.

In such a device it is possible to apply pipes with a rather small diameter. In these pipes periodically a rise of pressure can occur, which produces directed currents of gas issuing from the openings in these pipes. The movable shut off valve gives a pulsing character to this current and as a consequence the gas jets produced are not experienced as a draught. The blow off gas jets come periodically to a standstill and provide local areas with a quality of gas which is better than the average atmosphere within the space. Experimentally it has turned out that in a stable the animals seek these areas with their nose. It has also been found that experimental animals had a better appetite and that a shorter fattening time suffices, while respiratory troubles are almost entirely prevented.

In its application to plants or the like vegetation e.g. in a green house, the invention can be used to supply carbon monoxide to the plants. This is of specific importance with plants which are vulnerable for draught phenomena.

SURVEY OF THE DRAWINGS

FIG. 1 shows in outline a section through a calf or cow stable provided with a ventilating device according to the invention.

FIG. 2 shows a detail of the device.

FIGS. 3 and 4 show two other possible applications.

The FIGS. 5 and 6 show two variants of a periodically movable shut off valve to be applied to the part of the device depicted in FIG. 2.

FIG. 7 shows an additional ventilation means, in the upper portion of the space.

FIG. 8 is a cross-sectional view of the stable shown in FIG. 1, showing a discharge pipe and its narrow apertures.

DESCRIPTION OF PREFERRED EMBODIMENTS

The invention will be described in its application for airing a space, e.g. a stable 1, as depicted in FIGS. 1 and 3. For this purpose this stable is provided, preferably on the outer side, with a driven implement 2 for sucking and blowing off air (see also FIG. 2). This implement consists e.g. of an electric motor 3, coupled to an air pump 4 of a type capable to generate a pressure level in the order of magnitude of 100 mm water-column or more. This pump is connected to a pipe system 5, consisting of a distributing pipe 6 which is directly connected to the pump and enters the space 1 through the wall 7 thereof. The distributing pipe 6 is connected with at least one branch line 8 leading to the locations within the space 1 where a supply of fresh air is desired. In FIG. 2 two branch pipes 8 are indicated and FIG. 6 shows a variant with three branch pipes.

Small apertures 9 are provided in each of the branch pipes 8 which are directed toward locations where animals are in the space 1. A periodically movable shut off valve 10 is mounted in this distributing pipe 6, which valve always closes or opens, one or more branch pipes 8. In the embodiment according to FIG. 2 two branch

pipes 8 are connected in parallel and compressed air is always fed to one of these pipes, the other pipe being shut off. In the variant according to FIG. 6 one of the three branch pipes 8 connected in parallel is always shut off, while compressed air is fed to the two other pipes.

In the space according to FIG. 1, the animals are mostly tethered and they take up a fixed position. The pipes 8 are arranged in such a manner that the fresh air, issuing from the apertures 9 is transferred to the location of the mouth and nose of the animal. The discharge of the excess air is effected via a passage 11 which is only operative at some overpressure. This overpressure is obtained by closing the space 1 entirely and by providing the passage 11 with a springloaded flap 12.

The device so far described operates as follows:

The pump 4 feeds air from the atmosphere at an overpressure of at least 100 mm watercolumn to the distributing pipe 6. When the shut off valve 10 is in the position as represented in FIG. 2, this compressed air is fed to the upper branch pipe 8, that is to say the right-hand pipe in FIG. 1. The diameter of the apertures 9 is now determined such that the blowing rate through these apertures is at least 10 m/sec. As a result of the periodical movement of the shut off valve 10 the supply of air to the branch pipes 8 is effected in a pulsing way, the arrangement being such that the air ejected through the apertures 9 between two successive blowing periods comes entirely or almost, to a standstill. For that reason the frequency of the to and fro movement of the shut off valve 10 can be selected within ample limits, in such a manner that the pulsing supply of air products at least three pulsations per minute and at most three pulsations per second.

In dependence of the number of branch pipes and the size of the shut off valve 10, the ratio in the length of time of the pulsations and the periods of standstill may range from three to one-fourth and will preferably range from one to one-third. In the embodiment according to FIG. 2 the ratio is 1.

The available overpressure within the space 1 further allows to achieve a discharge of air from this space at very particular locations. For that purpose one or more pipes 13 are provided at these locations where the developing gases should be discharged. In the embodiment according to FIG. 1 such locations are formed by a gutter 14. The pipe 13 is now disposed above this gutter and provided with small apertures 50. This pipe leads directly to the outside. The diameter of these apertures and the diameter of the pipes 13 are determined such with respect to each other, that the difference of pressure between the interior of the space 1 and the atmosphere — said difference lying in the order of magnitude of 20 mm watercolumn — manifests itself almost entirely as a pressure drop in these apertures. As a consequence the discharge of foul air is effected on the entire length of the pipe 13. This local discharge of air is achieved without using any additional power source.

FIG. 3 shows the situation in a pigsty, where the animals have no fixed place. The branch pipes 8 are provided in such a manner that, when the animals are standing before the feed trough 15, there is a sufficient supply of fresh air. The other pipe 8 is positioned such, that the animals automatically lie down at the suitable location. A gutter 14, and a gangway 16 are also provided in this sty.

FIG. 4 represents a multi-storey henhouse, wherein a plurality of branch pipes 8 provide for an agreeable atmosphere at each storey. This construction shows that by applying the invention, the full space of a building can be utilized and that there are no corners, which can only be ventilated with difficulty.

In order to obtain a pulsating flow of air, it is advisable to arrange that the shut off valve 10 switches snappingly over. A possible embodiment shows FIG. 5 in which a rotatable cock plug 17 is provided in the distributing conduit 6. This plug consists of a tube piece from which a part of the wall has been sawn out so that the air can flow into one of the branches 8. The plug 17 is secured to a shaft 18 carrying a cross bar 19. An intermediate shaft 20 is provided parallel to the shaft 18 with a slight eccentricity. The intermediate shaft carries a crank 21 at the one end and a cross bar 22 at the other end. A motor 23 is provided for turning the plug 17, the shaft 24 of the motor being coaxial to the shaft 18. The shaft 24 of the motor is provided with a crank 25. The members 19 + 21, and 22 + 25 constitute each a so-called eccentric cross-bar joint. The motor 23 is secured by means of screws 26 in a housing 27 with a wall 28. In this wall the intermediate shaft 20 is rotatably supported via a ball bearing 29.

When the motor is started the cross bar 22 will turn a half turn at a full revolution of the crank 25. The same applies to the crank 21 and the rod 19. In this way the cockplug is once turned through 180° per two revolutions of the shaft 24 of the motor. Due to the eccentricity of the intermediate shaft 20, the turning time of the plug 17 will about amount to a third of the time of stoppage. The plug will therefore periodically be turned over and alternately close and open, the upper and lower branch pipe 8.

When the speed of rotation of the shaft 24 amounts to one hundred revolutions per minute, there are 25 pulsations of air in each of the pipes 8. The length of time of each pulsation and likewise of each period of rest is 60/50 sec. The output of the air pump is effectively used in this way and the angular position of the branches 8 with respect to the distributing pipe 6 is such that the plug always promotes a proper flow of air to the opposite opening.

It is observed that the cockplug 17 may be rotated by a mechanism consisting of a single eccentric cross-bar joint instead of the double embodiment shown in FIG. 5. In that case the motorshaft 24 is directly connected to the intermediate shaft 20. The reduction ratio of the single joint mechanism is 1 : 2 instead of 1 : 4, as described with reference to FIG. 5.

In FIG. 6 a variant of the shut off valve is depicted which in this case consists of a shockwise rotating plate 30 cooperating with three branch pipes 8. This plate is pivotally arranged about a central shaft 31, on which a gear wheel is fixedly secured. This gear wheel is in mesh with a rack 33 which in the longitudinal direction is slidably guided in a passage 34 on the plate 30. A spring 35 urges the rack 33 radially outwards. The end of the rack 33 can cooperate with three abutments 36 arranged at intervals of 120° along the circumference of a circle. The shaft 31 is driven by a motor with a very low speed in such a way that the plate 30 stops during a certain time, e.g. 5 seconds before a branch pipe 8 is opened. As soon as the rack 33 in opposition to the

pressure of the spring **35** will move radially inwards to such an extent that this rack clears the abutment **36,** the plate **30** will turn clockwise since the rack moves along the gear wheel **32.** In this way the rack moves radially outwards whilst simultaneously performing a swinging movement with the centre line of the shaft **31** as, a centre. After a movement through 120° the rack is stopped by the next abutment **36,** while the upper branch pipe **8** (in FIG. **6**) is opened and the right-hand branch pipe **8** of the two lower ones is closed.

In the case just described, the length of time of each pulsation and of the period of standstill is in the ratio 2:1. When the plate **30** has such a dimension that it simultaneously covers the opening of two branch pipes **8,** the aforementioned ratio is 1 : 2.

As a result of the positioning of the blowing apertures **9** in the vicinity of the head of the animals in the space, there may be formed a non-aired area in the upper part of the space. In order to avoid this FIG. **7** shows that an additional pipe **37** is connected to the distributing conduit **6.** This pipe extending in the upper part of the space **1** is provided with a plurality of outflow apertures **38.** In the roof **39** some discharge openings are provided, each formed by a chimney **40** into which opens an outflow opening **38** of a branch **41** of the pipe **37.**

The air flowing from the apertures **38** sweeps along the surrounding air through the chimney **40.** The whole operates as an exhaust blower. The ventilation just described can be regulated by means of a valve **42** in the pipe **37.** The valve can be thermostatically operated.

It should be noted that the method according to the invention can also be performed by dividing the space into several sections and to provide each section with one air delivering means by which an e.g. fan-shaped air jet is pulsatingly blown to the animals in that section.

One of the most important advantages of the method and the device according to the invention consists in that the consumption of air is considerably smaller, as compared with the conventional low pressure systems, whereby a heating or cooling of the ventilating air becomes possible. In FIG. **2** a heating spiral **43** is depicted in the distributing conduit **6.** A further advantage is that no draught symptoms appear in the aired space. The fresh air is brought at the locations where it is used which allows a combination with vapourous or gaseous medicines or means for medical treatment.

What we claim is:

1. A method for supplying gas to a space in which are a number of living beings whereby gas under overpressure is introduced from outside into the space, and is directed towards the beings in a pulsing way with a velocity greater than 2 m/sec., and with a frequency ranging from one pulsation per 20 seconds to three pulsations per second, in such a manner that between two successive blowing periods the ejected gas comes almost to a standstill.

2. A method according to claim **1,** wherein the ratio in the length of time of the pulsations and the standstill, ranges from three to one-fourth and preferably from one to one-third.

* * * * *