July 23, 1968 T. REID ETAL 3,393,505

COMPOSITE ELASTIC YARN

Original Filed Dec. 11, 1963

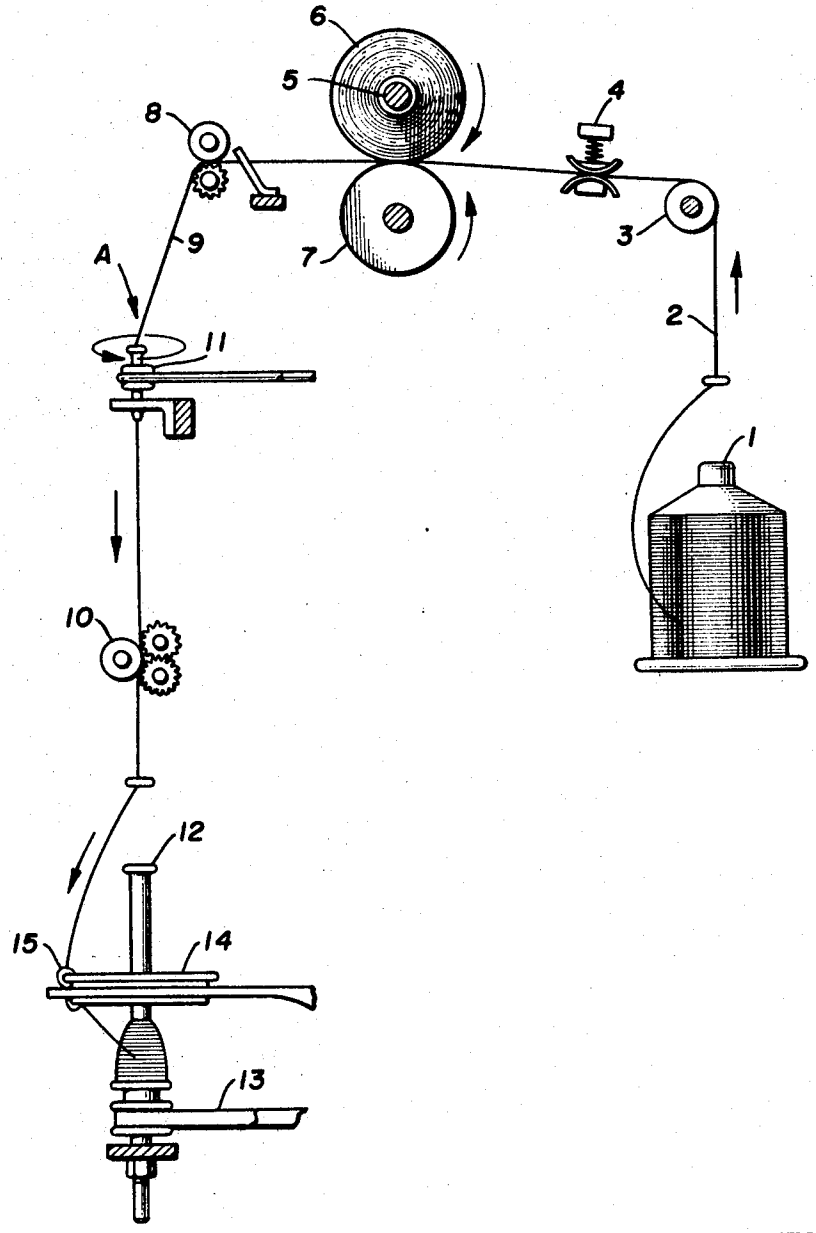

INVENTORS
THOMAS REID
WILLIAM D. MacDONALD
BY
Stevens, Davis, Miller & Mosher
ATTORNEY

United States Patent Office 3,393,505 Patented July 23, 1968

3,393,505

COMPOSITE ELASTIC YARN

Thomas Reid, Danielson, and William D. MacDonald, South Woodstock, Conn., assignors to The Hale Manufacturing Company, Putnam, Conn., a corporation of Delaware

Original application Dec. 11, 1963, Ser. No. 329,670, now Patent No. 3,303,640, dated Feb. 14, 1967. Divided and this application Nov. 21, 1966, Ser. No. 595,729
6 Claims. (Cl. 57—152)

ABSTRACT OF THE DISCLOSURE

There is provided a composite yarn having a core of at least one elastic continuous filament made of rubber, spandex, or the like, around which at least one inelastic staple fiber roping is wrapped with a twist of about 4 to 8 turns per inch. The elastic filament and the roping are draft together about 1.10–2.00.

This application is a divisional application of application Serial Number 329,670 filed December 11, 1963, now U.S. Patent No. 3,303,640.

The present invention relates to the production of composite yarn. More particularly, the present invention relates to a method of producing a new and useful composite textile yarn by wrapping an elastic continuous filament yarn with a relatively inelastic spun yarn.

It is well known to produce composite yarn having a core yarn wrapped with a different yarn. The core yarn can be formed from a plurality of continuous filaments or staple fibers. When strength is desired in the composite yarn, the core is made of continuous filaments. When both strength and stretchability are desired properties, the continuous filaments in the core are highly elastic such as rubber and spandex filaments. Ordinarily, a spinning frame including a plurality of pairs of drafting rolls and a twister take-up device is used. In such operation, an assemblage of fibers drawn into a single strand is further drawn between the drafting rolls. The core yarn usually is introduced to the nip of the last set of rolls with the core yarn and the drafted strand being twisted together as they proceed together to the take-up device. In one known method of spinning composite yarn a spandex yarn tensioned to be in a relatively highly stretched state is wrapped with a drawn roving. The fibers in the roving are well distributed, even and parallel.

Composite yarns produced by wrapping a drawn roving about a core of continuous filaments have not been entirely satiisfactory in that the staple fiber wrapping lacks good bulk and does not cover the core satisfactorily. Furthermore, where a highly tensioned elastic yarn is used as a core, it is difficult to maintain a uniformly stretched condition therein, without which unevenness of the covering of the elastic yarn by the wrapping yarn results.

An object of the present invention is to provide a novel composite yarn.

Another object of the present invention is to provide a new system for producing a composite yarn having a core and a wrapping. Other objects will be apparent.

The core of the composite yarn of the present invention is composed of at least one elastic continuous filament made of rubber, spandex or like material having a high degree of elasticity. Wrapped about the core is at least one inelastic staple fiber roping. The fibers in the staple roping have a low order of parallelism and cross one another in a rather haphazard arrangement. In a preferred embodiment the continuous filament core is made of spandex and the staple roping is made of synthetic fibers, most preferably nylon, polyester, or acrylic fibers.

The method, generally speaking, involves wrapping at least one staple fiber roping about at least one elastic continuous filament in a particular manner. A source of an elastic continuous filament and a source of an inelastic staple fiber roping having little fiber parallelism are provided. One can use satisfactorily one or more staple fiber ropings as produced by a card, preparatory to spinning in accordance with the woolen system. The elastic filament and the staple fiber roping are forwarded longitudinally from their respective sources and moved together in contacting relation to a zone wherein the staple fiber roping is drafted a rather low, but critical amount of about 1.10–2.0 and wherein the continuous elastic filament is elongated a corresponding amount. Also, in the zone a false twist is applied to the staple roping and elastic filament. After leaving the zone, a true twist of about 4 to 8 turns per inch is imparted to the roping and fialment. Finally, the resulting composite yarn structure is taken up in an orderly manner.

The invention can further be understood by reference to the accompanying drawing which is a schematic diagram of one form of apparatus useful for performing the process herein described.

With reference to the drawing numeral **1** denotes a bobbin on which an elastic continuous filament **2** is wrapped which can be in monofilament, multi-filament, or fused multifilament forms. The elastic filament is withdrawn, passed over guide **3** and through a tension device **4**. A minimum tension is employed just sufficient to provide uniform delivery of the filament and prevent overfeeding; and best results are obtained by minimizing the elongation of the elastic filament delivered to the draft zone A.

A roping spool **5** is provided on which a suitable staple fiber roping **6** is wrapped. Quite often it is desirable to use two or more ropings for each end of elastic filament where greater bulk is required. The roping **6** is unwound from the spool and forwarded together with filament **2** to zone A by spinning drum **7**. Roping **6** and filament **2** enter the zone through back rolls **8** wherein a drafting force is applied to the resulting composite strands **9** by front rolls **10**. The yarn forwarding speeds of rolls **8** and rolls **10** are such as a provide a draft of about 1.10–2.00, preferably 1.30–1.85. A false twister **11** is positioned in the path of the strands. This is employed to impart a false twist of about ½ to 1 turn per inch at the same time that drafting is accomplished. After leaving zone A, a true twist of about 4–8 turns per inch is imparted to the yarn. As a convenient way of doing this, one can employ a ring twister take-up of the type illustrated in the drawing. A bobbin **12** is rotated by a driven belt **13** to wrap the resulting composite yarn thereon. A conventional vertically reciprocating spinning ring **14** carrying a ring traveller **15** adapted to revolve freely about the bobbin is employed.

The term elastic filament is used to mean a manufactured filament from natural or synthetic rubber, as well as from spandex. The term spandex filament in its generic sense means a manufactured filament in which the fiber-forming substance is a long chain synthetic elastomer comprised at least 85% of segmented polyurethane or the like. Suitable inelastic textile fibers in staple form employed in the roping include the natural fibers of cotton and wool and the man-made fibers of rayon, cellulose acetate, nylon, acrylic fibers, polyesters, etc. However, it is preferred that the staple fiber yarn be a nylon such as nylon 66 and nylon 6, a polyester such as polyethylene terephthalate, or an acrylic fiber such as those acrylic fibers produced from polymers of 85% and more acrylonitrile.

The following examples are given to illustrate this invention further.

EXAMPLE I

A roping of nylon 66 crimped staple fiber was prepared using a conventional card preparatory to spinning on the woolen system. The roping was wound on a spool and had a total weight of 183 grains per 50 yards. The fibers had an average denier of 3.0 and an average length of about 2.5 inches. The roping was unrolled from the spool and moved together with a spandex filament of 420 denier to the back rolls on a woolen spinning frame driven at a speed of 102 r.p.m. The front rolls on the frame were operated at an increased speed to exert a draft of 1.80. A false twister between the two pairs of rolls imparted a false twist of ¾ turn per inch to the strands. After leaving the front rolls, the strands were packaged using a ring twister take-up to impart a twist of 6 turns per inch. The resulting core yarn had a uniform appearance with the wrapping of staple fibers completely and evenly covering the spandex filament core. The bulk of the composite yarn was excellent.

EXAMPLE II

A roping of crimped acrylic fibers prepared from an acrylonitrile polymer of 94% acrylonitrile and 6% vinyl acetate is prepared on a card as in Example I above. The roping has a total weight of 165 grains per 50 yards and the fibers thereof an average denier of 3.0 and a staple length of about 2.5 inches. In the same manner as in the above example the roping is combined with a 420 denier spandex filament and forwarded to a woolen spinning frame. The back rolls of the spinning frame are driven at 102 r.p.m. and the front rolls at such increased speed as to exert a draft of 1.60. A false twister between the pairs of rolls imparts a false twist of 0.8 turn per inch. After leaving the front rolls, the strands are packaged by a ring twister take-up which imparts a twist of 5.5 turns per inch. The resulting core yarn has a uniform appearance with even covering of the core by the wrapping of staple fibers as well as excellent bulk.

The process for the preparation of core yarns illustrated above possesses the distinct advantage of ability to control the degree of cover and wrap of a given core or different size cores by varying the size of the roping or ropings used. Excellent bobbin-to-bobbin uniformity is achieved because of uniform draft of the combined strands across any number of spindles and successive bobbins.

The yarns of the present invention are particularly useful in the construction of stretch-type garments including bathing suits and other action sportswear, as well as slip covers and the like. The process is easy to control and can be carried out using a woolen spinning frame without extensive modification thereof. Other advantages of the invention may be noted.

It is not intended that the invention be limited solely to the details above. It will be recognized that numerous modifications conforming to the spirit of the invention may be made. Therefore, it is intended that the invention be limited only by the scope of the following claims.

What is claimed is:

1. A composite yarn comprising a core of at least one continuous elastic filament around which at least one staple inelastic fiber roping of synthetic polymer fibers is wrapped with a twist of about 4 to 8 turns per inch, the continuous elastic filament and the staple elastic fiber roping having been drafted about 1.10–2.00.

2. The composite yarn of claim 1 wherein the polymer is nylon-66.

3. The composite yarn of claim 1 wherein the polymer is nylon-6.

4. The composite yarn of claim 1 wherein the polymer is polyethylene terephthalate.

5. The composite yarn of claim 1 wherein the polymer is acrylic polymer of at least 85% acrylonitrile.

6. The composite yarn of claim 1 wherein the elastic filament is made of spandex.

References Cited

UNITED STATES PATENTS

2,076,270	4/1937	Harris	57—163
2,076,273	4/1937	Harris	57—163 XR
3,009,311	11/1961	Wang	57—152
3,127,731	4/1964	McKinnon	57—152
3,153,316	10/1964	Livingston	57—144
3,234,724	2/1966	Storti	57—152
3,243,950	4/1966	Hermes	57—152 XR
3,098,347	7/1963	Smith	57—152

FRANK J. COHEN, *Primary Examiner.*

DONALD E. WATKINS, *Assistant Examiner.*