July 2, 1940. G. L. MYDLIL 2,206,821

ANTENNA SYSTEM

Filed Dec. 7, 1938

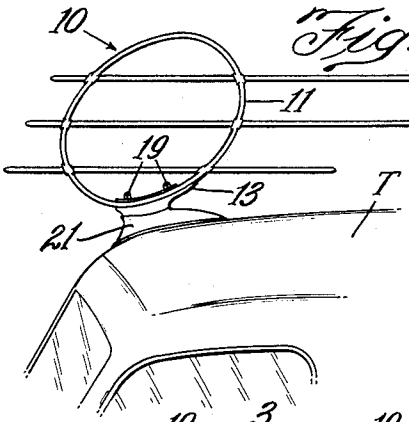

Fig. 1.

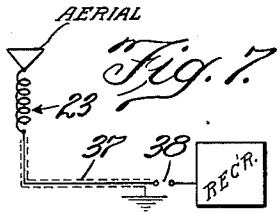

Fig. 7.

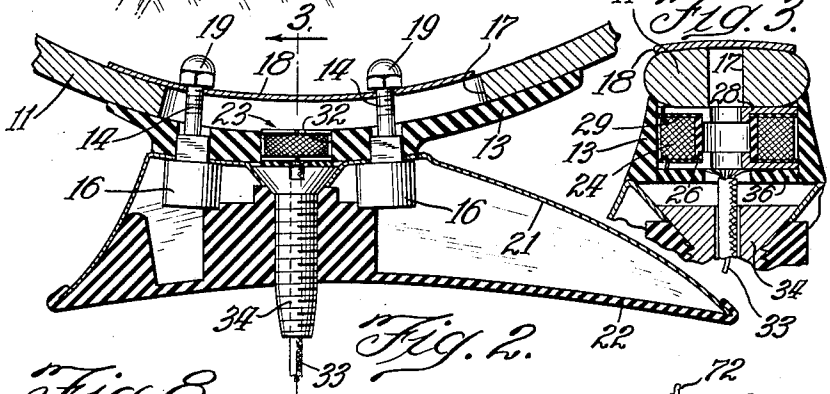

Fig. 2.

Fig. 3.

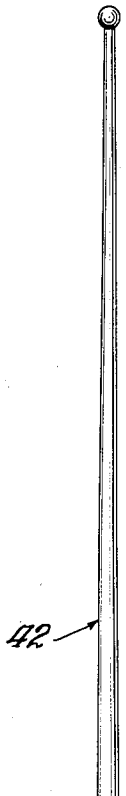

Fig. 8.

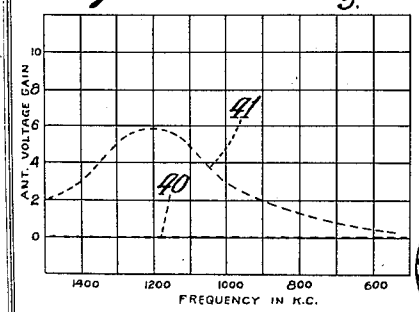

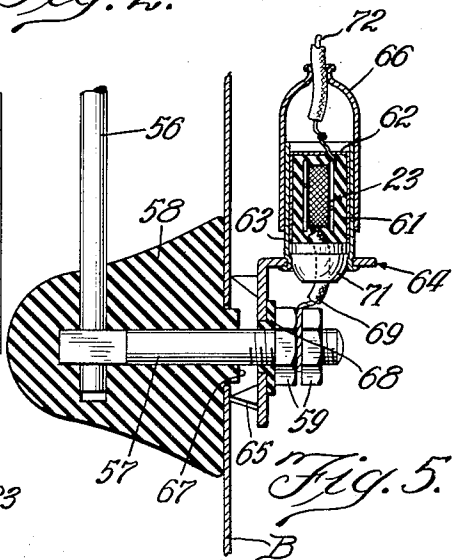

Fig. 5.

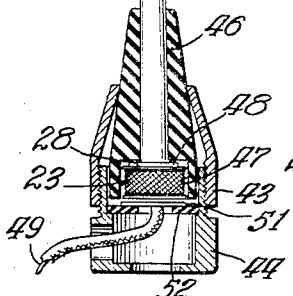

Fig. 4.

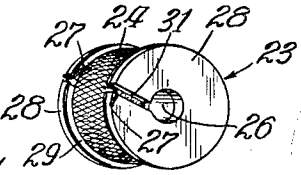

Fig. 6.

Inventor:
Gus L. Mydlil

By: Norman L. Mueller
Atty.

Patented July 2, 1940

2,206,821

UNITED STATES PATENT OFFICE

2,206,821

ANTENNA SYSTEM

Gus L. Mydlil, Chicago, Ill., assignor to Galvin Manufacturing Corporation, Chicago, Ill., a corporation of Illinois

Application December 7, 1938, Serial No. 244,469

8 Claims. (Cl. 250—33)

My invention relates in general to antenna systems for radio apparatus. More particularly my invention is directed to an antenna system for radio receivers, and includes a signal collector and a fixed inductance coil in connection therewith for resonating the antenna circuit and increasing the signal energy in the system. The system also includes a shielded conductor extending from the coil to a radio receiver. The invention disclosed in this application relates to my application filed of even date herewith, and likewise directed to an antenna system for radio apparatus.

The radio art in general has always been faced with troublesome problems in obtaining satisfactory reproduction due to the inherent characteristics of radio signals. Such signals are relatively weak at best and must be amplified so as to bring them up to the level which will be audible through a loud speaker or the like. Of course the signal current must be changed from A. C. to D. C., as well. An aerial which is one-half as long, or one-quarter as long as the radio waves within the frequency range being received, normally picks up the maximum in signal strength. However, this requires a long space, which is not normally available, and never is available on an automobile, airplane, and similar mobile craft except when receiving very short waves. Even though space is available, mounting a long aerial is normally difficult, expensive, and inconvenient, and as a result, aerials have been used which are shorter than they should be from a theoretical standpoint, and this deficiency in length and hence signal energy has been made up through the radio receiver circuit design itself. In addition, there is interference picked up by the aerial and often by the receiver as well, and noise developing in the radio receiver circuit itself, substantially all of which must be eliminated or counterbalanced in a manner such that the signal to noise ratio for the receiver circuit is high enough to provide satisfactory reproduction. The art in most instances has attempted to take care of this difficulty by a more sensitive receiver and this adds to the cost and difficulty of manufacturing the radio receivers.

It is an object of my invention to provide an improved antenna system for radio apparatus.

A further object of my invention is to provide an antenna system which is embodied in compact apparatus occupying a relatively small space and yet providing a high signal voltage output.

Another object of my invention is to provide an inexpensive antenna system for radio apparatus.

A still further object of my invention is to provide an antenna system which will increase the signal voltage in the antenna system itself, to such a degree, that such increased signal voltage being introduced into a receiver will make possible a simplification in radio receiver circuit design.

Other objects and advantages of my invention will be apparent from the following description taken with the drawing in which:

Fig. 1 is a side elevation of an automobile radio receiver aerial embodying my invention.

Fig. 2 is a longitudinal sectional view on an enlarged scale of a fragmentary portion of the antenna structure of Fig. 1 showing particularly the inductance coil in connection therewith.

Fig. 3 is a fragmentary cross-sectional view on a further enlarged scale along the line 3—3 of Fig. 2.

Fig. 4 illustrates a modification of my invention and is shown partially in elevation and partially in a vertical sectional view.

Fig. 5 is a fragmentary view partly in elevation and partly in vertical cross-section of a further embodiment of my invention.

Fig. 6 is a perspective view of the inductance coil employed in the antenna system in the embodiments illustrated in Figs. 1, 4 and 5.

Fig. 7 is a schematic diagram of my antenna system connected to a radio receiver.

Fig. 8 graphically illustrates the antenna voltage gain obtained with my antenna system in comparison to an antenna system employing only the aerial itself of my system.

In practicing my invention I provide a signal collector or aerial for radio receiver signals and a fixed inductance coil in direct or substantially direct connection with said signal collector, with a shielded lead-in extending from the coil for connection to a radio receiver. The inductance coil is preferably designed to peak over as broad a range of frequencies as possible to bring up the gain of the antenna system over the frequencies which are most popular for broadcast reception in a general locality. Or the coil is designed to increase the signal voltage gain over a range of frequencies in which a particular receiver design is normally deficient.

Figs. 1 to 3 illustrate an antenna system embodying my invention adapted particularly for connection to an automobile radio receiver. The aerial or signal collector 10 comprises a metal ring 11 having a plurality of metal rods 12 mechanically and electrically connected therewith.

The ring 11 is rigidly but angularly adjustably mounted on an insulator member 13 by a pair of bolts 14, each of which has an enlarged head 16 of insulating material, and a threaded shank extending through an elongated slot 17 in the bottom portion of the ring 11. The ring is clamped in position on the bracket 13 by a plate 18 on the inside face of the ring and over the elongated slot 17, and retained by cap nuts 19 which may be screwed onto the threaded shanks of the bolts 14 while bearing against the plate 18 in the usual manner. Shoulders on the insulator head 16 for the bolt 14 bear against the inside surface of a metal cup 21 supporting the bracket 13, and a rubber base 22 on such metal cup is cemented directly onto the top 23 of the automobile.

A fixed inductance coil 23 illustrated in Figs. 2 and 3, and in perspective in Fig. 6, is employed in my antenna system. This coil includes a winding 24 which is preferably universal wound, although, of course, other designs may be employed, on a cylindrical form 26 of insulating material. One end 27 of the coil winding is soldered to a brass disc terminal 28 which also acts as an end plate for the coil form, and the other end of the winding is similarly secured to an identical disc at the other side of the coil form. An insulating washer 29 is positioned intermediate the metal disc 28 and the side of the winding 24, on each end of the coil form 26, so that the winding is actually surrounded on three sides by insulating material. Each disc 28 is split at 31 so as to reduce eddy currents in the disc and yet provide a complete terminal member over the entire surface of the disc.

The coil 23 is mounted in a cavity 32 in the insulator bracket 13 with one disc-like terminal member 28 in direct contact with the lower face of the ring 11 on each side of the elongated slot 17 as shown clearly in Fig. 3. A lead-in connection from the coil 23 is provided by bringing the lead-in wire 33 into direct contact with the lower terminal disc 28. To increase the area of contact between such lead and the disc 28, the end of the lead is fanned out as shown in Fig. 3. The coil 23 rests indirectly upon the head of a mounting screw 34 provided with a hollow shank for extending through a corresponding hole cut into the roof of the automobile top T. The coil 23 and the lead-in wire 33 are insulated from such mounting screw 34 and the metal cup 21 by a rubber washer 36 resting on the top of the head of the screw and fitting in the aperture 32 to provide a resilient cushion as well as an insulator for the coil. The washer 36 may be slightly oversize so as to press the coil 23 upwardly and provide a positive and firm engagement with the ring 11 as the cap nuts 19 on the mounting bolts 14 are screwed downwardly in engagement with the plate 18.

The lead-in wire 33 is shielded in the usual manner with a shield 37 as shown diagrammatically in Fig. 7. The shield for such lead-in wire or conductor is grounded but this is the only portion of the antenna system which is connected to ground before being connected with the receiver circuit through a suitable connection such as a jack at 38.

As to the operation of my antenna system, radio signals to be reproduced in the receiver are picked up by the aerial 10 designated in Fig. 7 by the word "Aerial", and fed directly into the inductance coil 23 in series therewith. With the coil connected to the aerial, and intermediate the aerial and shielded lead-in, such coil is in a high R. F. voltage field, while the shielded lead-in which acts to exclude extraneous noises from the antenna circuit at the point, is in a low R. F. voltage field so that there is a minimum of loss therein. The coil has such characteristics that it resonates the antenna circuit, including the aerial and such coil, over as broad a band of frequencies as possible to match a carrier wave frequency in the receiver within such range. As mentioned above, these characteristics may be chosen to increase the signal energy over the portion of the complete broadcast spectrum for instance, which is most generally used in a particular locality, or the coil 23 may have such characteristics that it will operate with the signal collector to increase the signal energy over a range of frequencies in which a particular receiver circuit is weak and normally relatively ineffective. It has been found that my system with the fixed inductance coil 23 however shows some increase in signal energy over the entire broadcast spectrum, although it is particularly effective over one portion, as previously explained. This is illustrated graphically in Fig. 8 illustrating the curve on antenna voltage gains over a frequency range of from 1500 to 550 k. c. This curve is merely illustrative, and shows the results simply from one commercial embodiment of my invention. The lower curve shown in dotted lines and designated by the reference character 40 corresponds to the measurement of an antenna system employing only a signal collector and a shielded lead-in, while the upper curve 41 shows the measurements with the same signal collector and shielded lead-in but including a fixed inductance coil as 23 in series connection intermediate the signal collector and lead-in in accordance with my invention. The coil in the system from which these measurements were taken was designed to provide the maximum signal voltage over a range from approximately 1300 to approximately 1100 k. c., but still providing a marked gain in signal voltage over the remainder of the broadcast spectrum.

A modification of my invention is illustrated in Fig. 4. This includes a rod-like signal collector 42 mounted at one end in a pair of corresponding threaded mounting members 43 and 44, which is insulated therefrom by an insulator 46 surrounding the end of such rod. The inductance coil 23, as previously described, is positioned within a cavity 47 at the end of the insulator 46, and is in engagement with and directly supporting the signal collector 42 at the lower end face 48 through one of the terminal discs 28 on the coil. The other terminal disc 28 rests upon the end of a shielded lead-in 49 which is soldered to a metal washer 51 to provide a terminal-like member for broad contact with the disc 28. The shield for the lead-in is grounded as shown in Fig. 7. The washer 51, the shielded lead-in 49, and the coil 23, are insulated from the mounting members 43 and 44 by an insulating washer 52 preferably of a yielding material such as rubber, to provide a cushion for the coil assembly and hence permit complete tightening as between the two mounting members 43 and 44 as is evident from the figures. The shielded lead-in cable 49 passes out of the member 44 for connection with a radio receiver. This embodiment of my invention may be conveniently mounted upon the door hinge of an automobile or any similar position as desired. The operation of this embodiment corresponds to that de-

scribed above for the structure of Figs. 1 to 3, inclusive.

A still further modification is illustrated in Fig. 5. The signal collector **56** is provided in a rod or wire of a desired length which is supported in a mounting bolt **57** and surrounded at the mounting end by an insulator **58**. The mounting bolt **57** is designed particularly for mounting on the body B of an automobile at the cowl portion and is rigidly secured thereon by a nut **59** threaded onto the end of the mounting bolt. The signal collector **56** is connected in series with a fixed inductance coil **23** constructed in the manner previously described, and completely immersed in wax **61** or the like within a paper form **62** for completely water proofing and sealing the coil. The paper form with the coil **23** therein is carried in a telescoping housing including a member **63** secured to a mounting bracket **64**, and a cover portion **66** telescopingly mounted on the outside of the member **63** and frictionally retained thereon. The mounting bracket **64** is L-shaped and is apertured at the lower leg to fit over the mounting bolt **57**. A plurality of projections **66** engage the inside surface of the body B and hold the bracket against turning as they are pressed against said body upon turning of the nut **59**. The mounting bolt **57** is insulated from the car body by the embossed portion **67** of the insulator **58** and an insulator washer **68** intermediate the bracket **64** and the mounting bolt itself.

The inductance coil **23** is connected to the signal collector **56** through the mounting bolt **57** and a short lead **69** which represents little more than a junction point between the collector and the coil itself. The conductor or lead **69** extends through a cap **71** closing the bottom of the housing for such coil. A shielded lead-in **72** is secured to the other end of the coil **23** and extends out of the top of the housing for connection to a radio receiver. The shield for the lead-in is grounded as shown in Fig. 7.

My invention provides therefore a simple, inexpensive antenna system which can utilize any of the present signal collectors in combination with an inductance coil in series connection therewith and a shielded lead-in from the coil or preferably, operate with a short inconspicuous signal collector to increase the signal voltage gain materially as shown in the graph of Fig. 8. A short, inconspicuous, and inexpensive signal collector can be employed with my antenna system to overcome many of the mechanical disadvantages of the signal collectors now in use and such short collector is more readily mounted, and less objectionable in appearance than those of the prior art. Furthermore, the antenna voltage gain is such that less amplification and consequently less gain is necessary in the radio receiver to which the antenna system is connected so that the receiver circuit can be provided in a simpler design and can be operated more efficiently with less noise developing in the receiver circuit itself.

Although I have described my invention in its preferred embodiments, it is understood that the invention is not limited thereto and the changes and modifications may be made therein all within the scope of the present invention and limited only by the scope of the appended claims.

I claim:

1. Antenna apparatus for mounting on the roof of an automobile for connection with a radio receiver in said automobile, said antenna apparatus including an enlarged metal aerial including a rim having an inside face and an outside face, an insulating bracket having a cavity intermediate its ends supporting said aerial at the outside face thereof, an inductance unit carried in said insulating bracket cavity and having a metal terminal portion on each of two opposite sides of said unit, a coil in said unit with each end of such coil connected to a corresponding terminal portion, with one of said terminal portions in mechanical and electrical contact with the outside face of said aerial, and a yielding insulator washer supporting said inductance unit in said insulating bracket cavity at the other terminal portion, and a shielded lead-in including a conductor in contact at one end with such other terminal portion, and with said conductor end lying intermediate the terminal portion and the yielding washer.

2. Antenna apparatus for a radio receiver comprising a rod-like signal collector, an inductance unit including a coil and a pair of insulatingly separated terminal portions with one end of said coil connected to one terminal portion and the other end of said coil connected to the other terminal portion and with one of said two terminal portions in electrical and physical contact with one end of said rod-like signal collector, means for supporting and housing said signal collector and inductance unit structure, said means including an insulator member surrounding the contacted end of said signal collector and having a recess in an extending end of such insulator extending beyond said aerial for surrounding the side of said inductance coil, and a pair of threadably secured housing members with one of said members engaging said insulator around the outside thereof and the other of said members receiving the inductance unit and extending end of said insulator, a yieldable insulator washer at the other of said two terminal portions of said inductance coil and a shielded lead-in having a conductor therein with one end in electrical connection with said other terminal portion and lying intermediate said other terminal portion and said yieldable washer.

3. An antenna system for a radio receiver comprising a signal collector, insulating means supporting said signal collector and having a cavity therein for receiving a fixed inductance coil, a fixed inductance coil fixedly supported in said insulating means in direct physical and electrical connection with said signal collector at one end of said coil, a shielded lead-in including a conductor connected to the other end of said coil and extending out of said insulating means for connection to a radio receiver.

4. In an antenna system for a radio receiver for a mobile craft having at least a portion of the body therefor in metal, the combination of an aerial for mounting upon the metal body portion of the craft, an inductance coil in electrical series connection with said aerial and maintained adjacent thereto with said connection being substantially without impedance intermediate the aerial and coil, means for maintaining said inductance coil adjacent said aerial including a mounting portion having a plurality of projections thereon for frictionally engaging the metal body portion of the mobile craft and adapted to be retained in such engagement against movement with respect thereto, a shielding housing for the coil operatively connected with said mounting portion, and means for insulating said aerial and said coil from the metal body portion of the mobile craft.

5. In an antenna system for a radio receiver for a mobile craft having at least a portion of the body therefor in metal, the combination of an aerial for mounting upon the metal body portion of the craft, including a long portion and a short portion, an inductance coil having one end thereof in electrical series connection with said short portion of the aerial, with said connection being substantially without impedance intermediate the coil and aerial, means for maintaining said inductance coil substantially stationary with reference to said aerial including a mounting portion having means for frictionally engaging the metal body portion of the mobile craft and adapted to be retained in such engagement against movement with respect thereto, a hollow housing for the coil operatively connected with the mounting portion, and means for insulating the aerial and the coil from the metal body portion of the mobile craft.

6. In radio antenna apparatus for mobile craft having signal collector means, the combination of insulating means for substantially directly supporting the signal collector means, said insulating means having a cavity therein, an inductance coil maintained in said cavity and in electrical connection at one end with the signal collector means, a conductor connected to the other end of such coil and extending out of said antenna apparatus for connection to a radio receiver, means for shielding said conductor to prevent the pick-up of undesirable interference, and means for supporting said insulating means and signal collector means on a mobile craft.

7. In radio antenna apparatus for mounting on the door hinge of a motor vehicle having therewith an elongated signal collector, the combination of apertured mounting means for mounting the apparatus on a vehicle door hinge on the outside of the vehicle, threaded means operatively connected with said signal collector, a fixed inductance coil in electrical connection at one end with the signal collector, and housing means for said coil operatively connected with said threaded means to maintain said coil in a substantially fixed position and shield said coil against exposure.

8. In a radio antenna system for mounting on a mobile craft, and with said system including a signal collector on the outside of said craft, the combination of an inductance coil in series connection with the signal collector, a threaded member in physical and electrical connection with the signal collector, housing means for said coil secured by said threaded member, conductor means at one end of said coil electrically connected to said threaded member, conductor means at the other end of said coil adapted for electrical connection with a radio receiver.

GUS L. MYDLIL.