United States Patent

Daley

[15] **3,662,460**

[45] **May 16, 1972**

[54] **METHOD OF MAKING A RANDOM WOUND ENCAPSULATED COIL**

[72] Inventor: **Thomas J. Daley**, Raleigh, N.C.

[73] Assignee: **Westinghouse Electric Corporation**, Pittsburgh, Pa.

[22] Filed: **Oct. 20, 1970**

[21] Appl. No.: **82,444**

Related U.S. Application Data

[62] Division of Ser. No. 659,216, Aug. 8, 1967, Pat. No. 3,559,134.

[52] **U.S. Cl.** **29/605**, 336/96, 336/198, 336/205, 336/208

[51] **Int. Cl.** **H01f 7/06**

[58] **Field of Search** 29/605, 602; 336/96, 198, 205, 336/208

[56] **References Cited**

UNITED STATES PATENTS

2,988,715	6/1961	Gizynski et al.	336/96
3,425,121	2/1969	Ostrander et al.	29/605
3,377,602	4/1968	Kruse	336/96
2,442,587	6/1948	Goggeshall et al.	336/96 X
3,273,099	9/1966	Minks	336/198 X

Primary Examiner—John F. Campbell
Assistant Examiner—Carl E. Hall
Attorney—A. T. Stratton and C. L. Freedman

[57] **ABSTRACT**

A random winding is located on a spool having a central support and having end flanges provided with ribs or perforations. An insulating material in fluid form such as an epoxy resin is applied under pressure to the winding and spool to flow between the ribs or through the perforations to compact the winding. This provides a continuous layer of the insulant in contact with end windings and assures good resistance to electric breakdown. Insulant may be introduced in a similar way between the central spool support and the winding.

8 Claims, 4 Drawing Figures

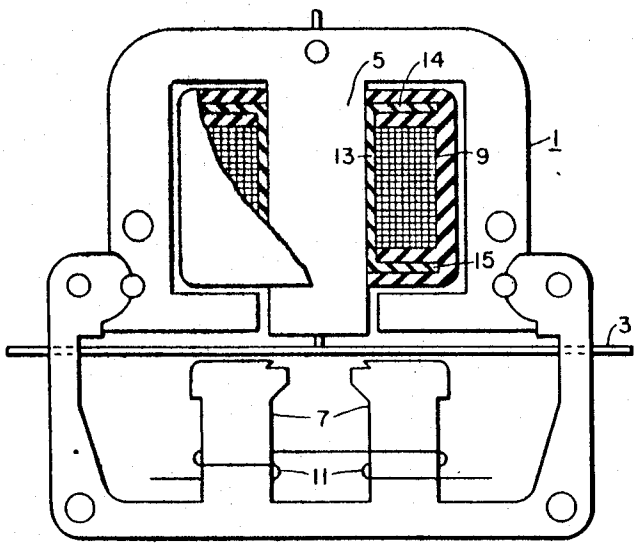

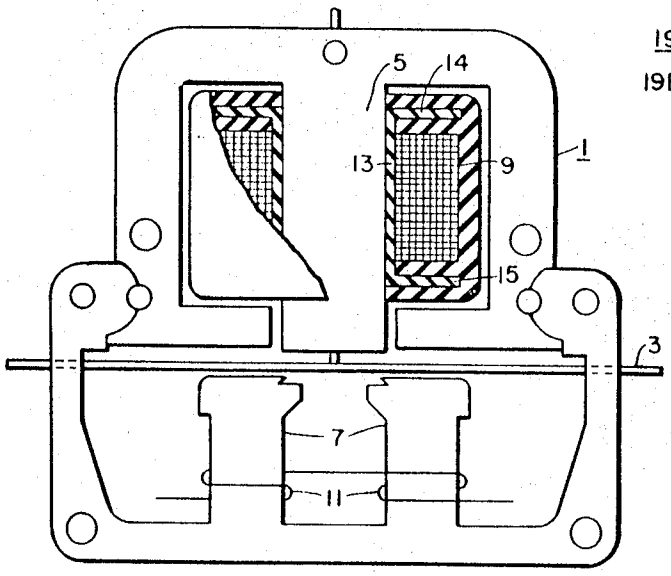

FIG. 1.

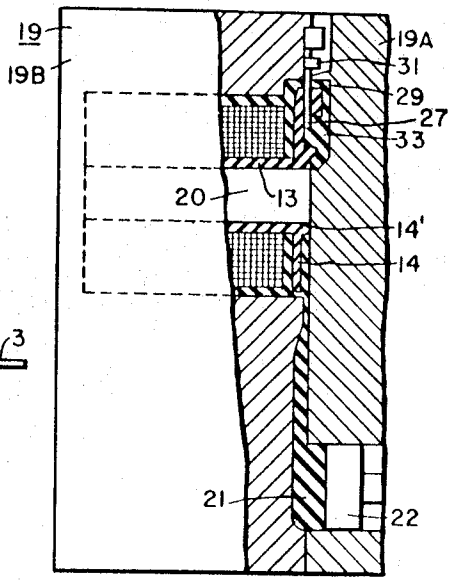

FIG. 2.

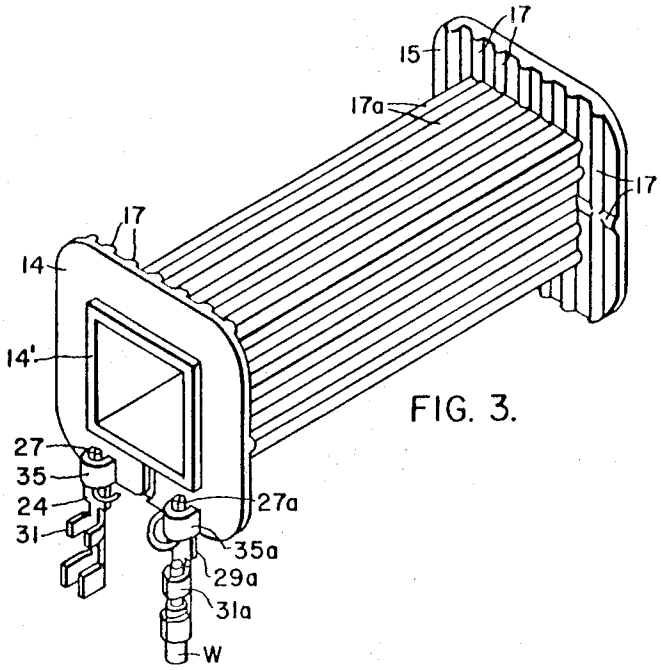

FIG. 3.

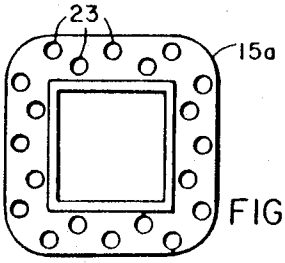

FIG. 4.

METHOD OF MAKING A RANDOM WOUND ENCAPSULATED COIL

CROSS-REFERENCE TO RELATED APPLICATION

This is a division of my copending patent application, Ser. No. 659,216 filed Aug. 8, 1967, now U.S. Pat. No. 3,559,134.

Reference is made to applicant's copending patent application, Ser. No. 659,217, now U.S. Pat. No. 3,496,504, filed concurrently herewith which is directed to a terminal assembly for an encapsulated coil.

BACKGROUND OF THE INVENTION

This invention relates to random wound coils and it has particular relation to random wound coils which have a high resistance to voltage breakdown. Although the invention is applicable to coils employed in various devices it is particularly suitable for voltage coils of induction watt-hour meters and will be described as applied to such voltage coils.

It has been common practice to employ a layer-wound construction for the fine wire voltage coils of watt-hour meters. Such coils can be designed readily to offer high resistance to internal voltage breakdown.

Random wound coils offer a number of advantages such as smaller size and simplicity of manufacture. However it has been very difficult heretofore to obtain high resistance in such coils to internal voltage breakdown. In an induction type watt-hour meter a voltage coil may be subjected to very high voltages as a result of lightning surges, switching surges or other transients.

SUMMARY OF THE INVENTION

In accordance with the invention, turns of a random wound coil are spaced from an adjacent surface of the supporting spool or bobbin. Preferably, an insulating molding material is introduced into the space so provided for the purpose of compacting the turns of the coils and substantially eliminating air spaces. The molding material is forced into intimate contact or engagement with the end turns of the coil and provides a continuous insulating surface between such turns and an adjacent portion of the spool or bobbin and between adjacent or closely positioned turns of the coil. This materially raises the breakdown voltage of the coil.

It is an object of the invention to provide a process for constructing a random wound coil having high resistance to voltage breakdown.

BRIEF DESCRIPTION OF THE DRAWINGS

Other objects of the invention will be apparent from the following description taken in conjunction with the accompanying drawings, in which:

FIG. **1** is a view in elevation with parts broken away of an induction watt-hour meter embodying the invention;

FIG. **2** is a view in elevation with parts broken away of the voltage coil employed in the meter of FIG. **1** associated with encapsulating apparatus;

FIG. **3** is a view in perspective with parts broken away of a spool employed for the coil of FIGS. **1** and **2**, and

FIG. **4** is a view in end elevation showing a modified spool construction.

DESCRIPTION OF THE PREFERRED EMBODIMENTS

FIG. **1** represents an induction watt-hour meter having an electromagnet **1** which provides an air gap for an electro-conductive disc or armature **3**. The electromagnet **1** includes a magnetic structure generally formed of laminations of soft magnetic steel and providing a voltage pole **5** and current poles **7**. A voltage winding **9** surrounds the voltage pole and current windings **11** are associated with the current poles **7**. Structures of this general type are described in the Electrical Metermen's Handbook, 7th edition, published in 1965 by the Edison Electric Institute of New York City. As pointed out in this handbook, pages 673 and 674, the meter stator may have a 10-kilovolt impulse withstand level.

The voltage coil **9** has a large number of turns of small diameter electroconductive wire which is of the insulated or enameled type. As an example a voltage coil designed for energization from a 240-volt alternating current circuit may have 5,500 turns of No. 33 wire (American Wire Gage).

The voltage coil **9** is of the random wound type wherein the turns are wound on a spool or bobbin having a central support **13** and a pair of flanges **14** and **15**. The central support **13** is in the form of a tubular sleeve which may be of circular cross section but more commonly has a rectangular cross section adapted to receive snugly a voltage pole **5** of rectangular cross section.

If the turns are wound on a conventional spool with the end turns in direct engagement with the flanges of the spool it will be found difficult to obtain the desired level of resistance to voltage breakdown. One of the principal breakdown points in a random wound coil of conventional construction is between the start and finish layers or intermediate layers at the interspace of the enameled wire and the spool flange. If such a coil is encapsulated the forces generated during the encapsulation tend to reduce the start to finish distance and this reduction decrease the breakdown level.

In accordance with the invention the end turns of the coil are spaced from the flanges by a layer of insulating material which is molded into intimate contact with the end turns. To this end the flanges may be provided with a large number of ribs **17** as shown in FIG. **3**. These ribs space the end turns of the coil sufficiently from substantial portions of the flanges to permit the introduction of hardenable insulating material in liquid form into the spaces established by the ribs. The material may be a solid at room or ambient temperature which becomes liquid under the temperature and pressure conditions present during such introduction.

After the winding is applied to the spool the resultant structure is placed in a mold **19** having a cavity corresponding to the desired resultant outline of the coil. The mold includes a top **19A**, a bottom **19B** and a core **20** for the central support to prevent entry of encapsulating material into the central support. The mold also has an inlet **21** through which suitable encapsulating material may be introduced by a transfer ram **22**. The encapsulating material is applied in liquid form through conventional runners and gates and is designed to harden in place to provide good insulation for the winding. Conveniently the encapsulant may be solid under ambient temperature conditions encountered by the meter during use, but may be liquid under the temperature and pressure conditions employed for encapsulation. Nylon and a thermosetting polyester resin are examples of suitable encapsulating materials. Preferably the encapsulating material is an epoxy resin provided with a filler such as fiberglass.

When the encapsulating material is applied in liquid form to the mold it flows between the ribs **17** on the flanges into direct engagement with substantial portions of the end turns of the winding.

In a preferred embodiment the encapsulating material is forced into the mold under substantial pressure such as 2,000 lbs. per square inch. Such pressure tends to compact the windings of the coil and to force the end turns away from the associated flanges. This has the effect of introducing a continuous layer of insulating material in direct contact or engagement with the end turns and located between the end turns and the associated flanges. The encapsulating material is now permitted to harden and if the material is of the thermosetting type heat may be applied to expedite such hardening.

The introduction of the encapsulating material into direct engagement with the end turns has made it possible to increase the breakdown voltage of the random wound coil to more than 225 percent of the values previously obtained, and increases of more than 300 percent have been obtained. For example 240-volt watt-hour meter voltage coils have been constructed with a breakdown voltage of the order of 23 kilovolts.

The elimination of air spaces resulting from the intimate contact of the encapsulant with the wire turns provides the additional benefit of reducing the harmful effects of corona. This elimination may be further assisted by utilizing the well-known vacuum molding techniques during encapsulation.

It will be noted that the encapsulating material together with the spool forms a complete encapsulation for the voltage coil. If desired the encapsulating material may be introduced between the turns and the central support **13** to increase the insulation between the turns and the voltage pole which is located within the central support. To this end ribs **17***a* on the outer surface of the central support may be provided to space adjacent coil turns from substantial portions of the support.

When the encapsulating material is applied it flows into the spaces between the ribs **17***a* of the central support and compacts the coil to form a substantial layer of insulation between the coil and the central support. For many applications these additional ribs **17***a* are not required.

In the modification of the invention shown in FIG. **4** the ribs on the flanges are replaced by holes **23**. Thus in FIG. **4** the flange **15** of FIG. **3** is replaced by a flange **15***a* of sheet insulating material having holes **23** which extend through the flange in a direction parallel to the axis of the central support to expose substantial portions of the coil end turns to the exterior of the spool. When the spool of FIG. **4** and the random wound winding thereon are encapsulated in the manner discussed above the liquid encapsulating material flows through the holes **23** into contact with the end turns. When the encapsulating material is subjected to pressure, the windings are compacted and a continuous layer of insulating material is molded into intimate engagement with the adjacent end turns.

Although the invention is particularly suitable for induction watt-hour meters the principle thereof may be employed on any random wound wire arrangement which requires high resistance to internal voltage breakdown. Thus it may be applied to a coil or a transformer which has insulation molded by injection, transfer or compression molding. Improvements in breakdown level also are obtained when the principle is applied to potted or impregnated coils, wherein the encapsulant may be permitted to flow by gravity around the coil.

The ends of the coil may be made available for electrical connections or terminals in any conventional manner. In a preferred embodiment the flange **14** is provided with a slot **25** through which the inner end of the coil extends. This end is secured in a solderless connector **27** located on one end of a sealing plate **29**. Another solderless connector **31** is secured to the opposite end of the plate **29** and extends beyond the encapsulating material to receive an external electric lead. As shown in FIG. **2** the mold **19** has a pocket **33** which permits encapsulating material to flow around the solderless connector **27**, and its connection together with part of the plate **29** while leaving the solderless connector **31** free to receive an external lead. The mold is of multi-part construction and provides parting surfaces engaging the plate **29**. Thus the plate **29** provides sealing surfaces engaging the adjacent parts of the mold. This terminal construction is presented in applicant's aforesaid copending patent application. A similar terminal construction **27***a*, **29***a*, **31***a* is shown for the other end of the coil.

In order to hold the terminal assemblies during the molding operation, the flange **14** has two pockets **35** and **35***a* proportioned to receive the connectors **27** and **27***a* respectively.

The complete spool may be constructed in any suitable manner. Preferably the spool including, the central support **13**, the flanges **14**, **15**, the ribs **17**, the pockets **35**, **35***a*, and the slot **25** are molded from a suitable insulating material which may be similar to that employed for encapsulation provided that it is capable of retaining its shape during the conditions of encapsulation. On its exterior face each flange may have a rectangular spacer adjacent the central support to space the flange correctly from the adjacent mold surface and to provide a barrier preventing entry of the encapsulant within the central support or core. Thus a spacer **14'** is formed integrally on the face of the flange **14**.

In a few applications exposed terminals may not be desired. In such a case the solderless connectors may be omitted and electric lead wires may be soldered to the coil ends. The solder joints are covered by the encapsulant.

I claim:

1. The method of constructing an encapsulated coil assembly which comprises constructing a unit including a spool having a central support and a flange at a first end of the support, winding turns of a coil around the central support with end turns of the coil touching at least a portion of said flange and with substantial portions of the end turns exposed to the exterior of said coil and spool, moving said end turns away from said flange in a direction parallel to the longitudinal axis of said spool such that said end turns are in a spaced relationship with said flange, and securing said coil and said end turns when in said spaced relationship to said spool.

2. The method claimed in claim **1** wherein said step of winding exposes substantial portions of the end turns to the exterior of said coil and spool unit, and said moving comprises the step of flowing under pressure a hardenable liquid insulating material between said end turns and said flange to mold said insulating material in intimate engagement with said end turns, whereby upon hardening said insulating material forms a continuous solid insulating layer intermediate said end turns and the flange.

3. The method of claim **2** wherein said liquid insulating material is flowed and subjected to pressure over the exposed surface of said coil to encapsulate the coil, said flowing under pressure compressing the coil turns.

4. The method of claim **3** wherein said winding of turns spaces the turns from substantial portions of the central support to permit introduction therebetween of said insulating material, said flowing step being effective for forcing said insulating material between the turns and said central support in intimate engagement with said turns.

5. The method of claim **2** wherein said central support comprises a tubular member, and said spool has a flange at a second end of the support, each of said flanges having plural perforations extending through the flange parallel to said tubular member, said flowing including the flowing under pressure of the insulating material from the exterior of said spool through said perforations to compress the coil.

6. The method of claim **1** wherein said spool has a second flange at a second end of the support, said winding step positioning end turns of the coil adjacent the second flange, said moving step spacing said end turns from the second flange.

7. The method of claim **6** wherein said step of winding exposes substantial portions of the end turns adjacent each of the flanges to the exterior of said coil and spool unit, and said moving comprises the step of flowing a hardenable liquid insulating material between each of said flanges and the adjacent end turns under a pressure sufficient to compress the coil turns and to mold a continuous layer of said insulating material into intimate engagement with the end turns adjacent each of the flanges, whereby upon hardening said insulating material forms a solid continuous insulating layer intermediate each of said flanges and the adjacent end turns.

8. The method of claim **7** wherein said winding step is random winding, and each of said flanges has an irregular surface engaging portion of the adjacent end turn surface and exposing other portions of such adjacent end turn surface, whereby said liquid insulating material flows into engagement with the exposed other portions and under pressure forces the end turns away from the flanges.

* * * * *