(No Model.) 2 Sheets—Sheet 1.

W. DIETRICH.

Machine for Shaping Piano Legs.

No. 241,316. Patented May 10, 1881.

Fig. 1

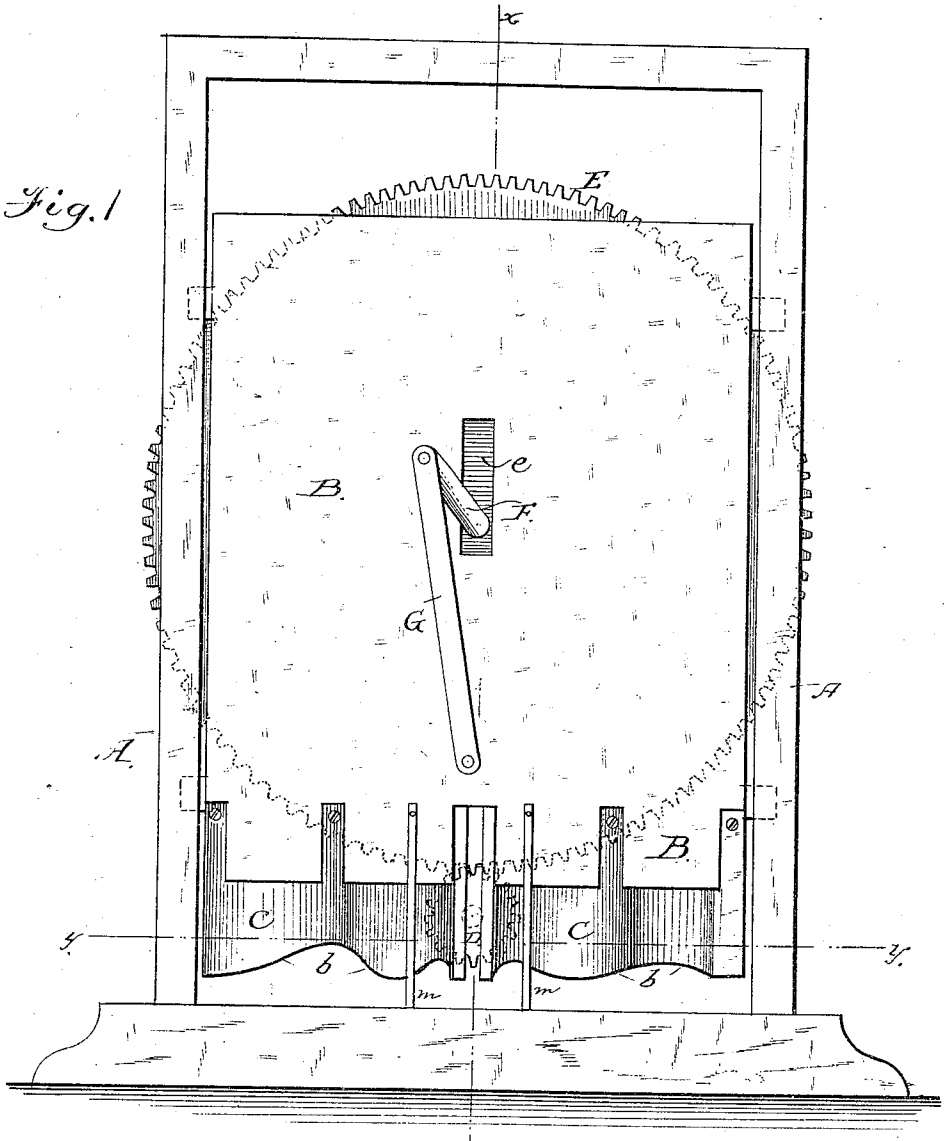

Fig. 4

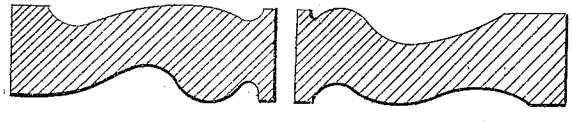

Witnesses;
Walter Fowler,
Jno. L. Condron.

Inventor;
Wm. Dietrich
per attys
A. H. Evans & Co

N. PETERS, Photo-Lithographer, Washington, D. C.

(No Model.) 2 Sheets—Sheet 2.

W. DIETRICH.

Machine for Shaping Piano Legs.

No. 241,316. Patented May 10, 1881.

Fig. 2.

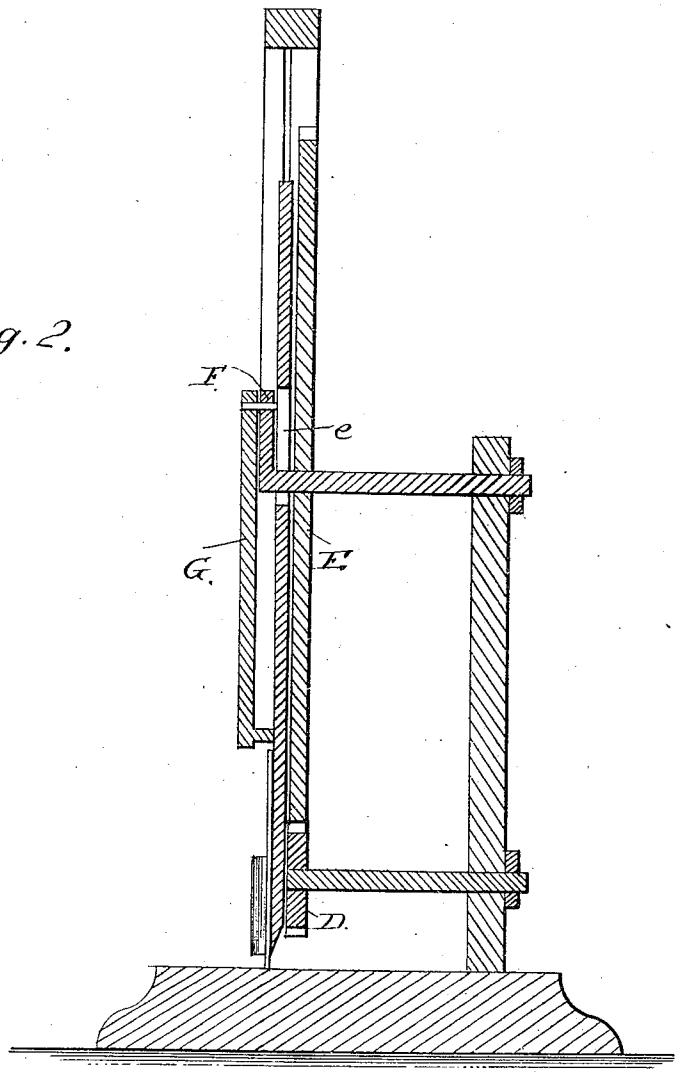

Fig. 3.

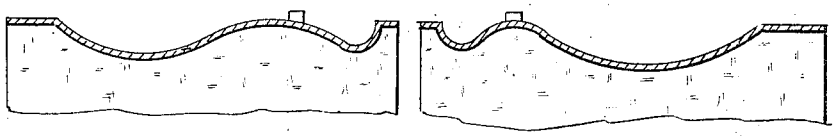

Witnesses;
Walter Fowler,
Jno. L. Condron

Inventor;
Wm Dietrich
per atty. A. H. Evans & Co

N. PETERS, Photo-Lithographer, Washington, D. C.

UNITED STATES PATENT OFFICE.

WILLIAM DIETRICH, OF BALTIMORE, MARYLAND.

MACHINE FOR SHAPING PIANO-LEGS.

SPECIFICATION forming part of Letters Patent No. 241,316, dated May 10, 1881.

Application filed March 18, 1881. (No model.)

To all whom it may concern:

Be it known that I, WILLIAM DIETRICH, of the city and county of Baltimore, Maryland, have invented a new and useful Improvement in Machines for Shaping Piano-Legs, of which the following is a clear, full, and exact description, reference being had to the accompanying drawings, making a part of this specification, in which—

Figure 1 is a front elevation of a machine with my improvements attached. Fig. 2 shows a vertical section through *x x*. Fig. 3 is a horizontal section through *y y*. Fig. 4 is a view of a piano-leg as shaped by the machine.

My invention relates to machines for shaping the legs of pianos preparatory to the carving; and it consists in the combination of devices, as hereinafter described and claimed.

To enable others skilled in the art to make and use my invention, I will describe the exact manner in which I have carried it out.

In the drawings, A is a frame-work, in which the cutter-block B vertically slides. On the lower portion of the block B are secured the cutters C, having curved cutting-edges, as shown at *b*, so formed that the portions of the wood to form the outer edges of the deeper grooves will be the first to come in contact with the cutter and be cut, ready for the chips to be cut out from the center of the deeper groove when the higher portion of the cutting-edge reaches the wood. The cutter is also curved on its vertical plane, as shown in Fig. 3, the curves corresponding with the curves on the horizontal cutting-edge, so as to cut the leg of the piano, as shown in Fig. 4. The curves of the cutters are to be adapted to the shapes required in the piano-legs.

The cutter-block B may be operated by any of the well-known mechanical devices. I have shown a small toothed pinion, D, which may be operated by steam or other power, meshing with a large cogged wheel, E. This wheel carries on its shaft a crank, F, connected with an arm, G, pivoted to the face of the cutter-block, which is slotted at *e*, to allow the block to rise and fall. It is evident from this construction that at every revolution of the wheel D the cutters will rise and fall. On the rear sides of each knife, at the point where, practically, the blade does no cutting, I secure the metal stiffeners and guides *m*, extending below the edges of the knives, so that when the wood is being fed under the descending knives and reaches these metal guides it is arrested, and the cutting is complete.

I am aware that planing-machines have been made with bits or cutters curved on their vertical planes and on their cutting-edges, and I do not claim such cutters, broadly, as my invention.

Having thus described my invention, what I claim as new, and desire to secure by Letters Patent, is—

In a machine for shaping piano-legs, the cutters C, curved on their vertical planes and on their cutting-edges, and provided with the stiffeners and guides *m*, in combination with the cutter-block B, and suitable mechanism for operating the same, substantially as and for the purpose herein set forth.

WM. DIETRICH.

Witnesses:
JNO. L. CONDRON,
T. WALTER FOWLER.