US 20020153033A1

(19) United States

(12) Patent Application Publication (10) Pub. No.: US 2002/0153033 A1

Miller (43) Pub. Date: Oct. 24, 2002

(54) COLLAPSIBLE STRUCTURAL FRAME STRUT WITH POP-IN CONNECTOR

(76) Inventor: **Stephen F. Miller**, Laguna Beach, CA (US)

Correspondence Address:
LEVIN & HAWES
P O BOX 4140
LAGUNA BEACH, CA 92652

(21) Appl. No.: **09/841,621**

(22) Filed: **Apr. 23, 2001**

Publication Classification

(51) **Int. Cl.**[7] **E04H 15/64**; E04H 15/34; E04H 15/36; E04H 15/40; E04H 15/00; E04H 15/32

(52) **U.S. Cl.** **135/121**; 135/124; 135/125; 135/126; 135/127; 135/119; 135/120.3

(57) **ABSTRACT**

An apparatus and method is disclosed for providing a collapsible support structure strut comprising, which may include a strut member; a hollow tubular terminal end portion of the strut member having an inner surface; and a detachable looped eyelet having at least one loop and a pair of extending legs, the legs being springedly biased to engage the tubular terminal end of the strut, thereby frictionally holding the looped eyelet in place at the terminal end of the strut. The apparatus and method may also employ a holding plug having at least a portion thereof that is shaped and sized to frictionally engage the inner surface of the tubular terminal end of the strut to frictionally hold the holding plug in engagement with the strut; and first and a second holding groove opposingly placed in the periphery of the holding plug and extending axially of the holding plug and adapted to either jamb a portion of a leg of the detachable looped eyelet against the inner surface of the tubular terminal end of the strut or to frictionally engage the leg of the detachable looped eyelet or to do both, to thereby improve the frictional holding of the eyelet in the tubular terminal end. The tubular terminal end of the strut may also have a pair of opposing holes in the tubular end, each positioned and sized to receive the respective protrusion from a respective leg portion of the detachable looped eyelet. The detachable looped eyelet may also have at least two loops.

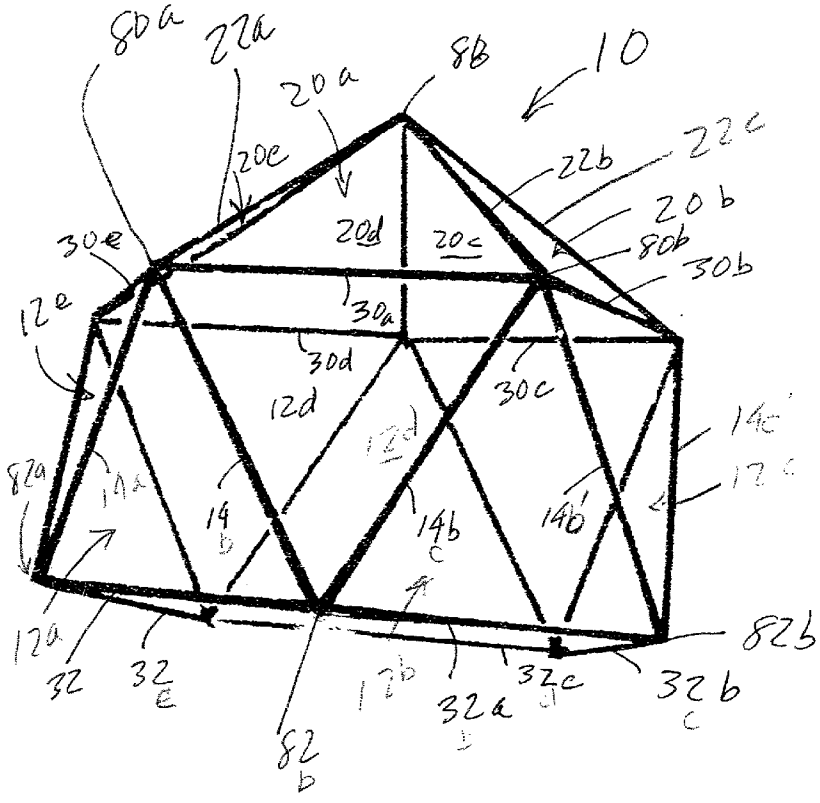

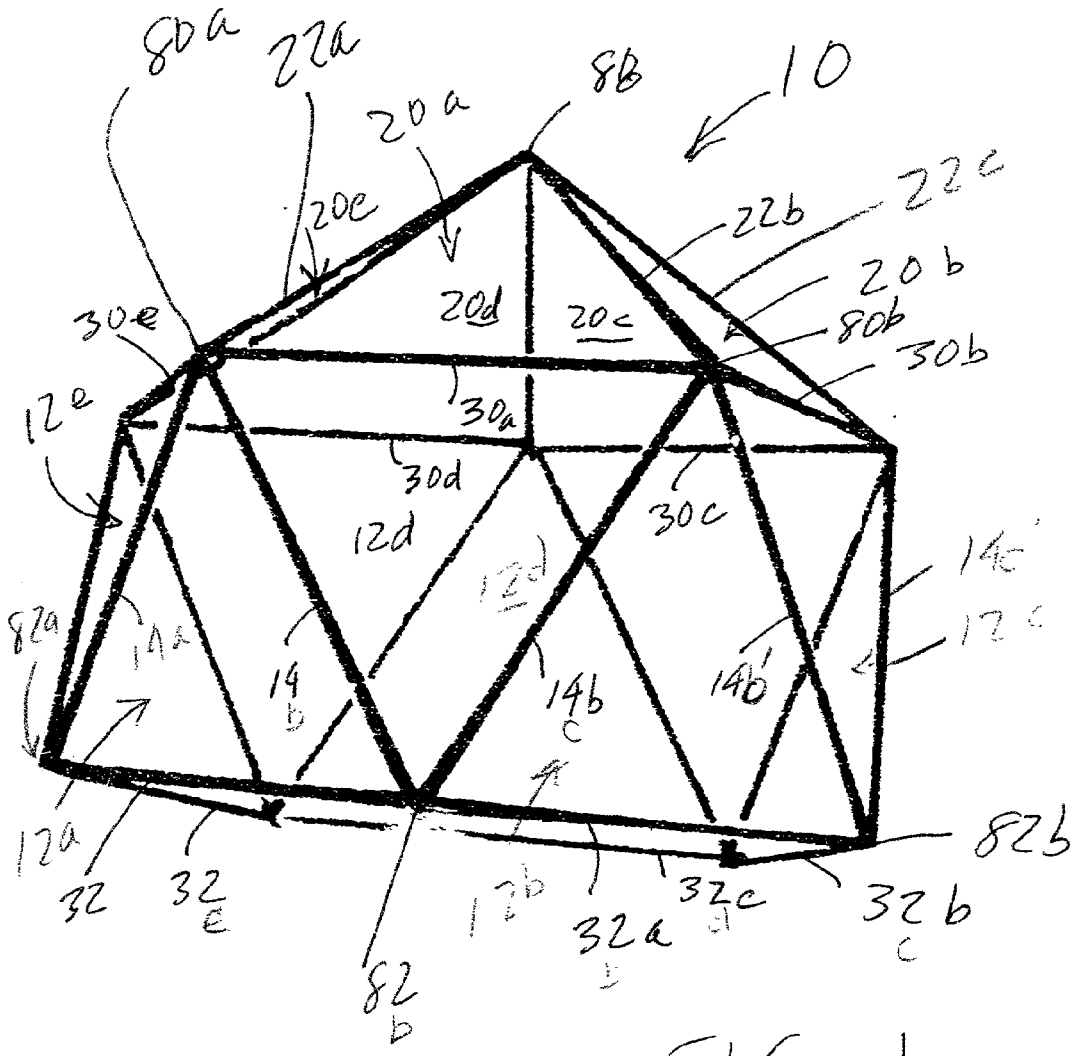
80a
22a
20a
8b
10
20e
22b
22c
20b
20d
20c
80b
30e
30b
30a
12e
30d
30c
12d
12d
14c'
12c
82a
14a
14b
14b
14b'
12a
32
32e
12b
32a
32c
32b
82b
82b

FIG. 1

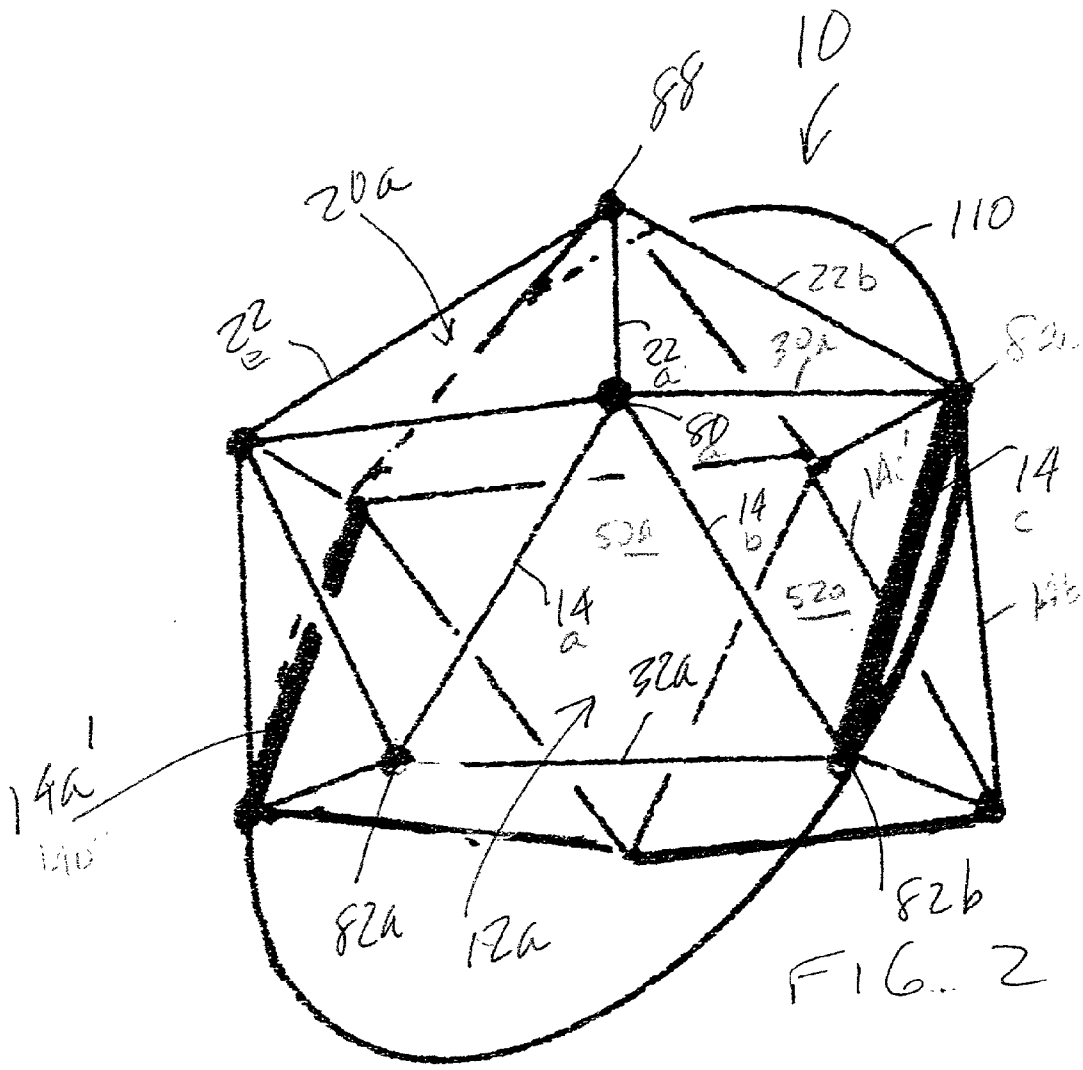

FIG. 2

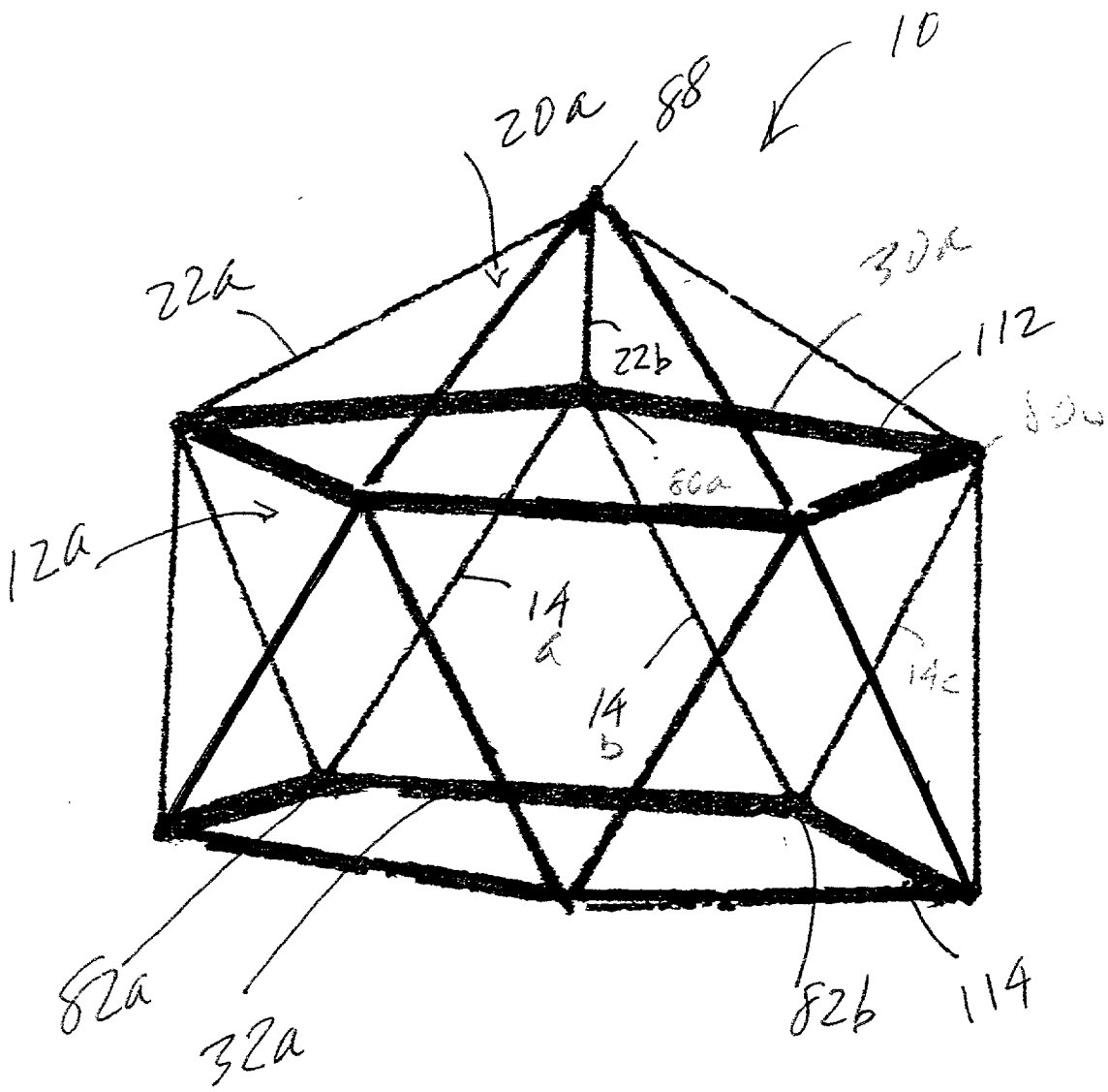

FIG. 3

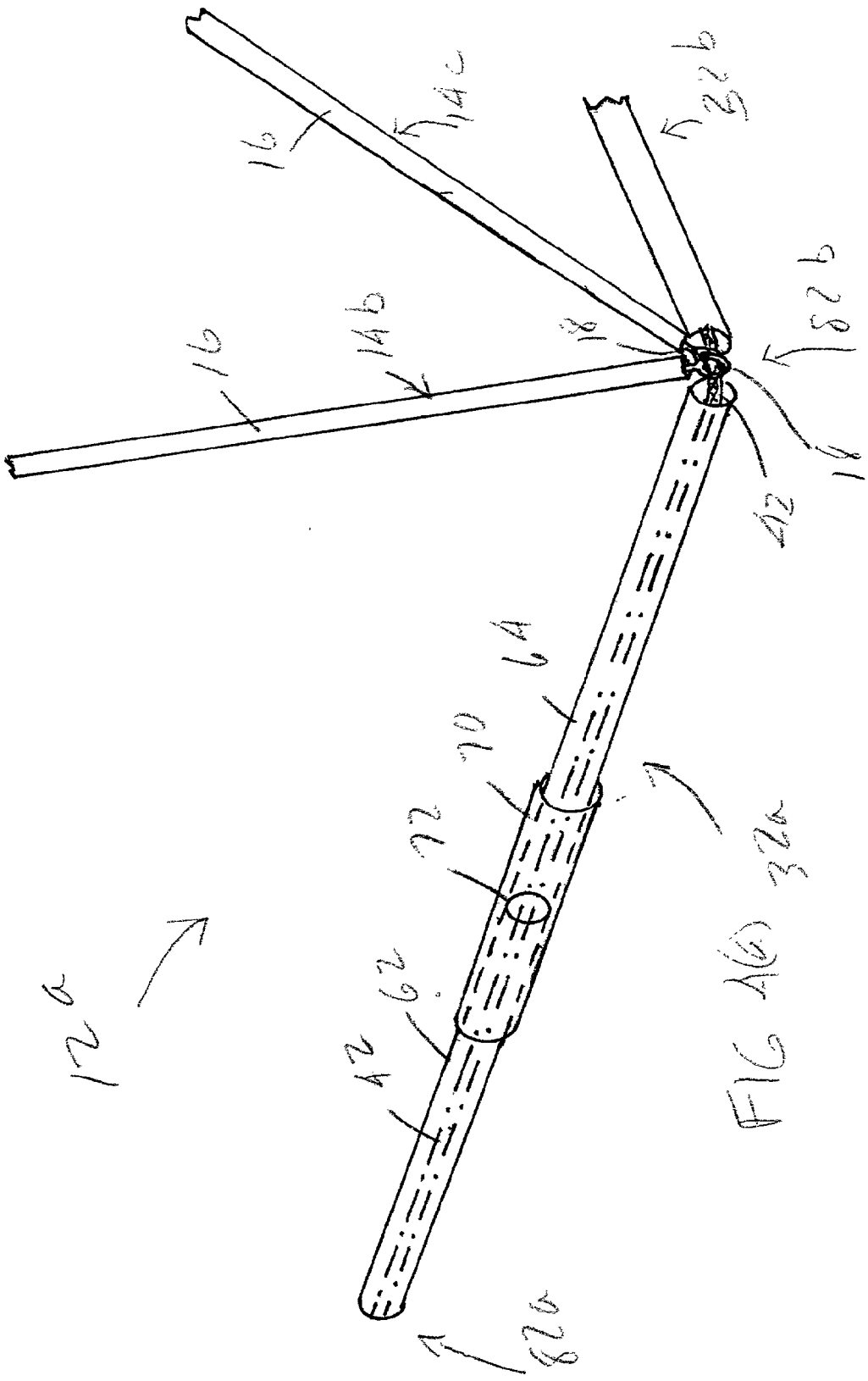

FIG 4(a)

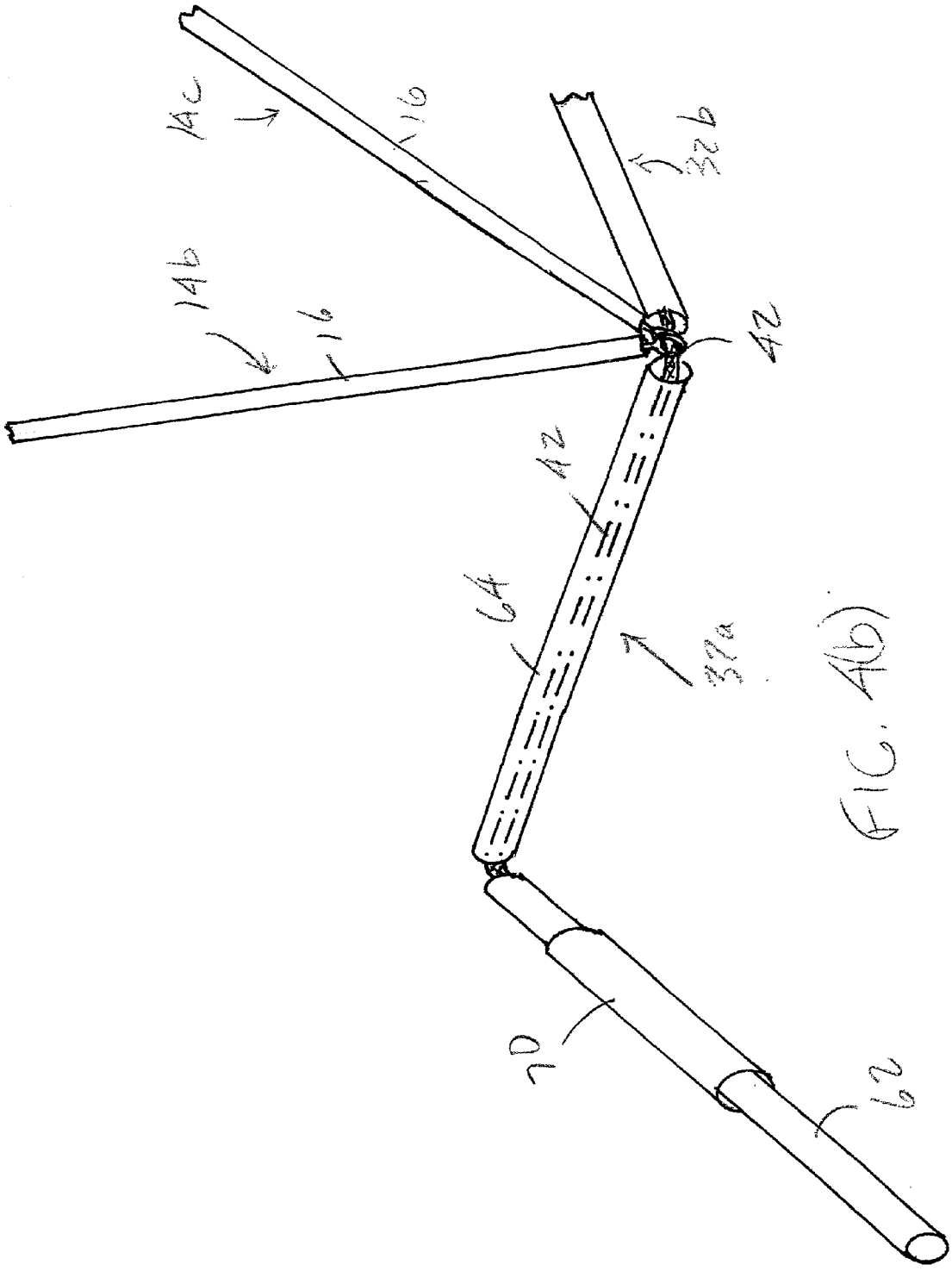

FIG. 4b

FIG. 5

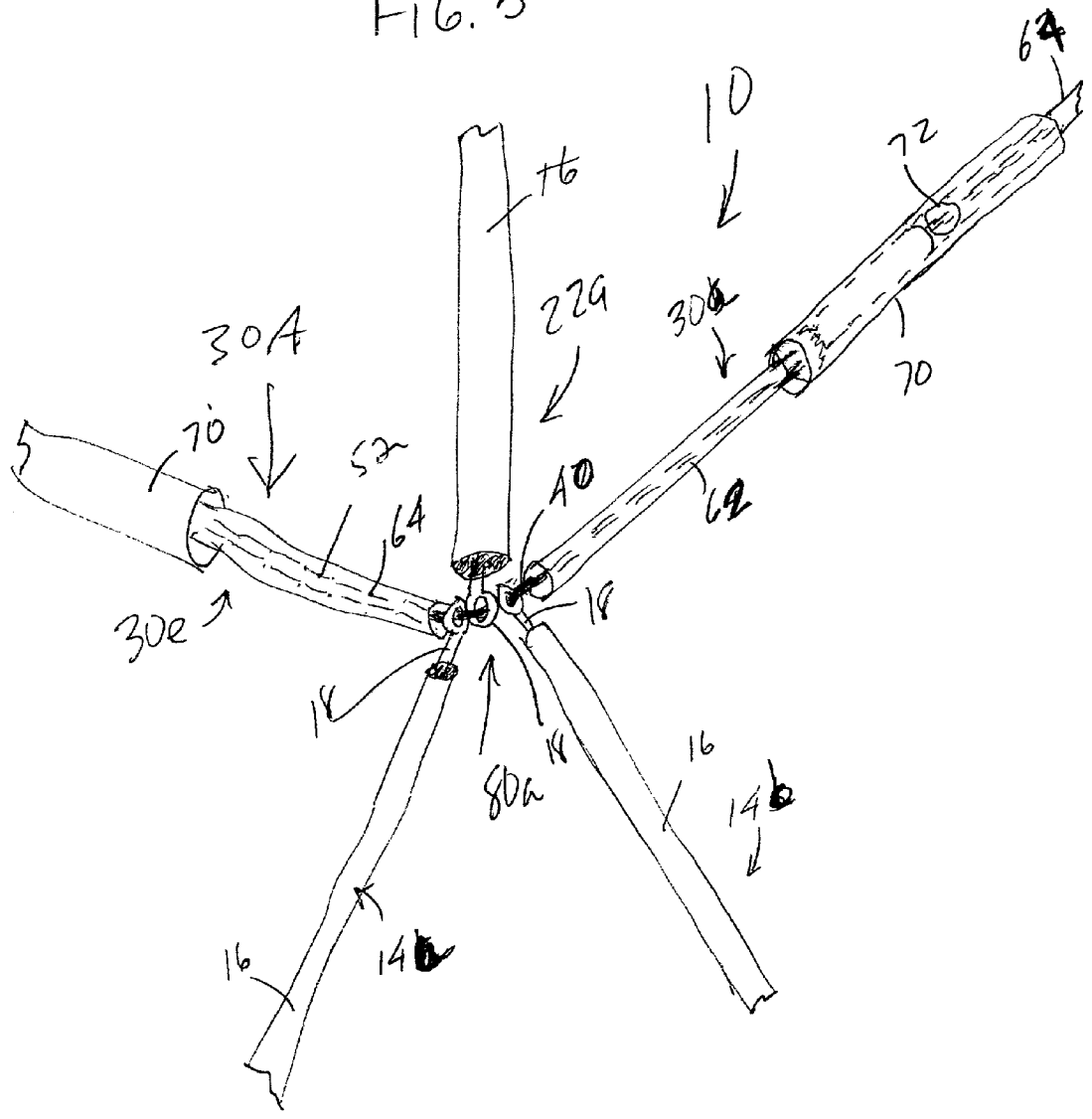

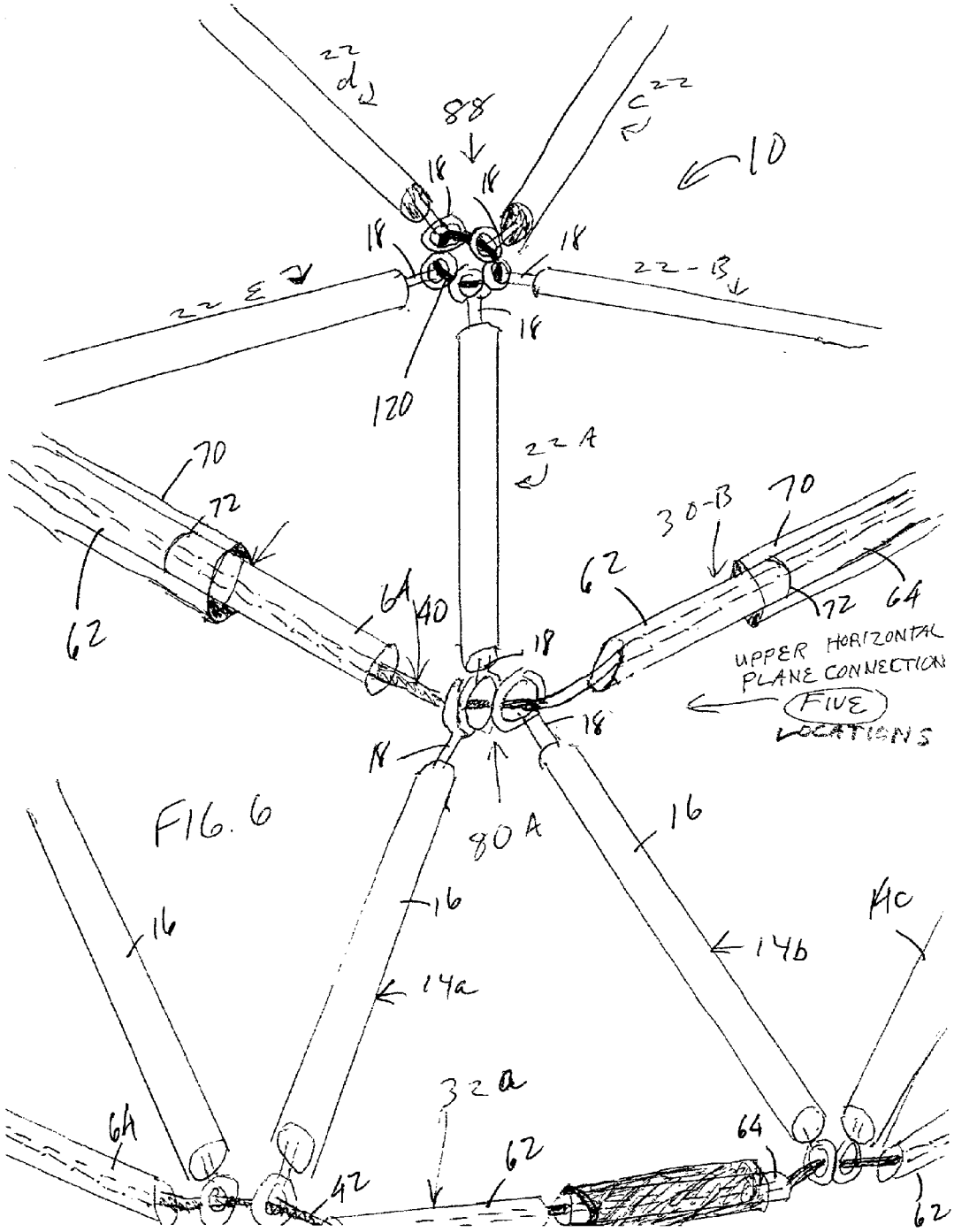
22 d
88
22 c
10
18
18
18
18
22 E
22 - B
18
120
22 A
70
72
62
64
40
18
30-B
70
62
72
64
UPPER HORIZONTAL PLANE CONNECTION
FIVE LOCATIONS
18
18
80 A
16
16
16
14a
14b
14c
32a
64
42
62
64
62

FIG. 6

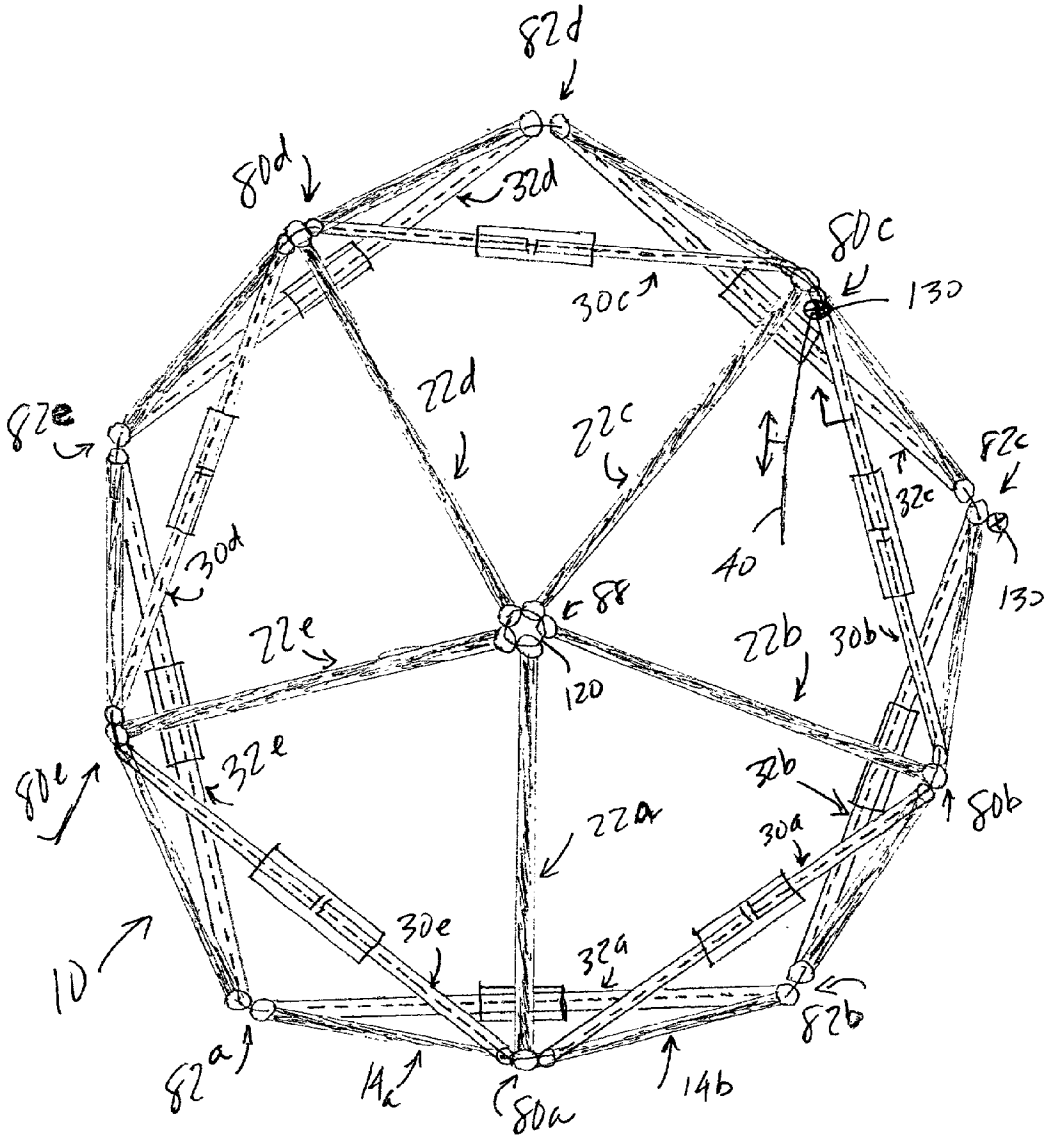
82d
80d
32d
80c
130
30c
22d
22c
82e
82c
32c
40
130
30d
88
22e
22b
30b
120
80e
32e
32b
80b
22a
30a
10
30e
32a
82b
82a
14a
14b
80a

FIG. 7

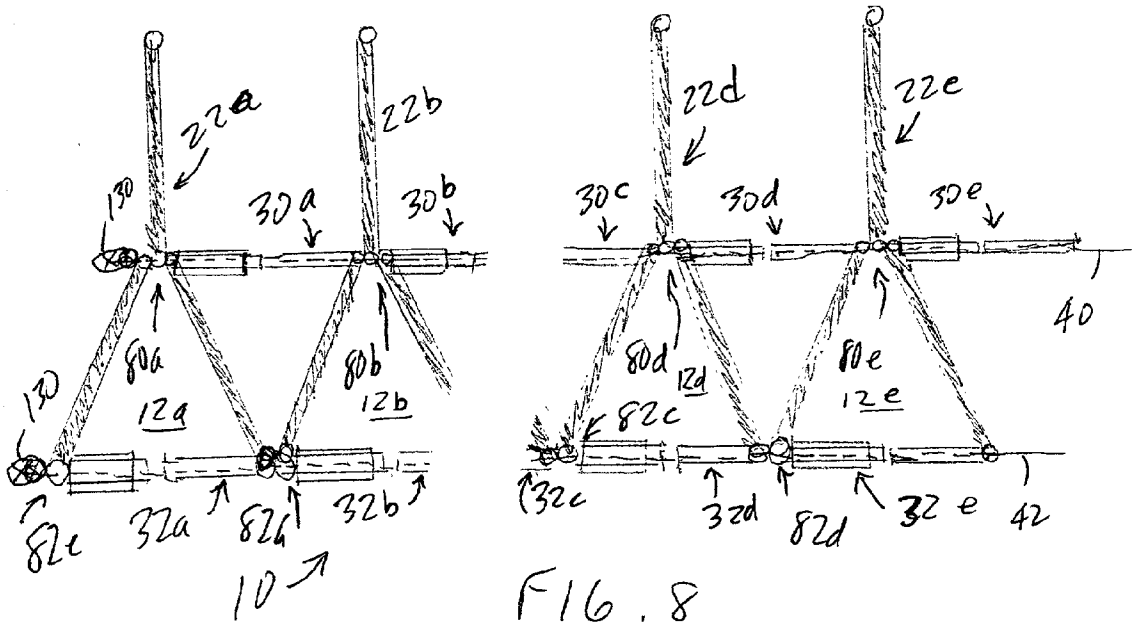
22a
22b
22c
22d
22e
130
30a
30b
30c
30d
30e
40
80a
80b
80c
80d
80e
12a
12b
12d
12e
82c
32a
32b
32c
32d
32e
42
10

FIG. 8

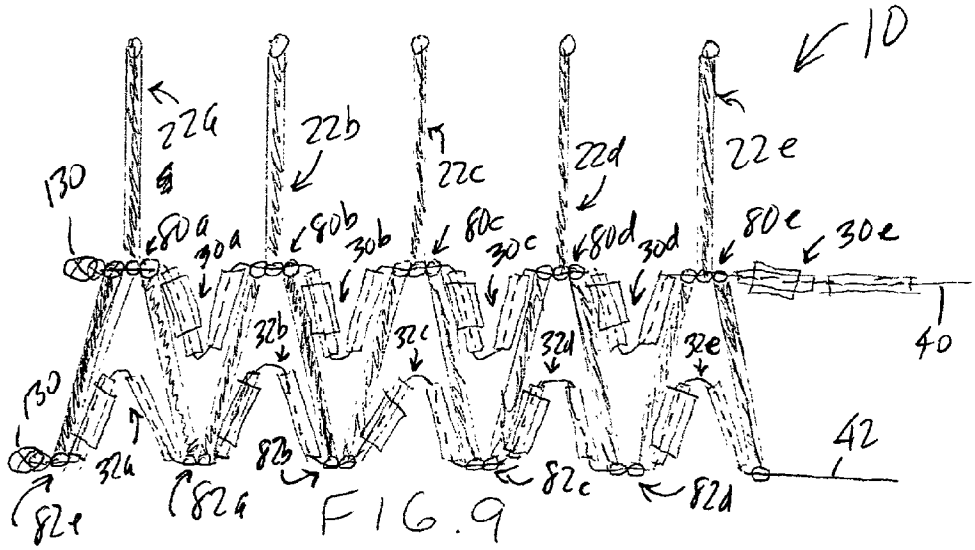
10
22a
22b
22c
22d
22e
130
30a
30b
30c
30d
30e
40
80a
80b
80c
80d
80e
32b
32c
32d
32e
42
82a
82b
82c
82d

FIG. 9

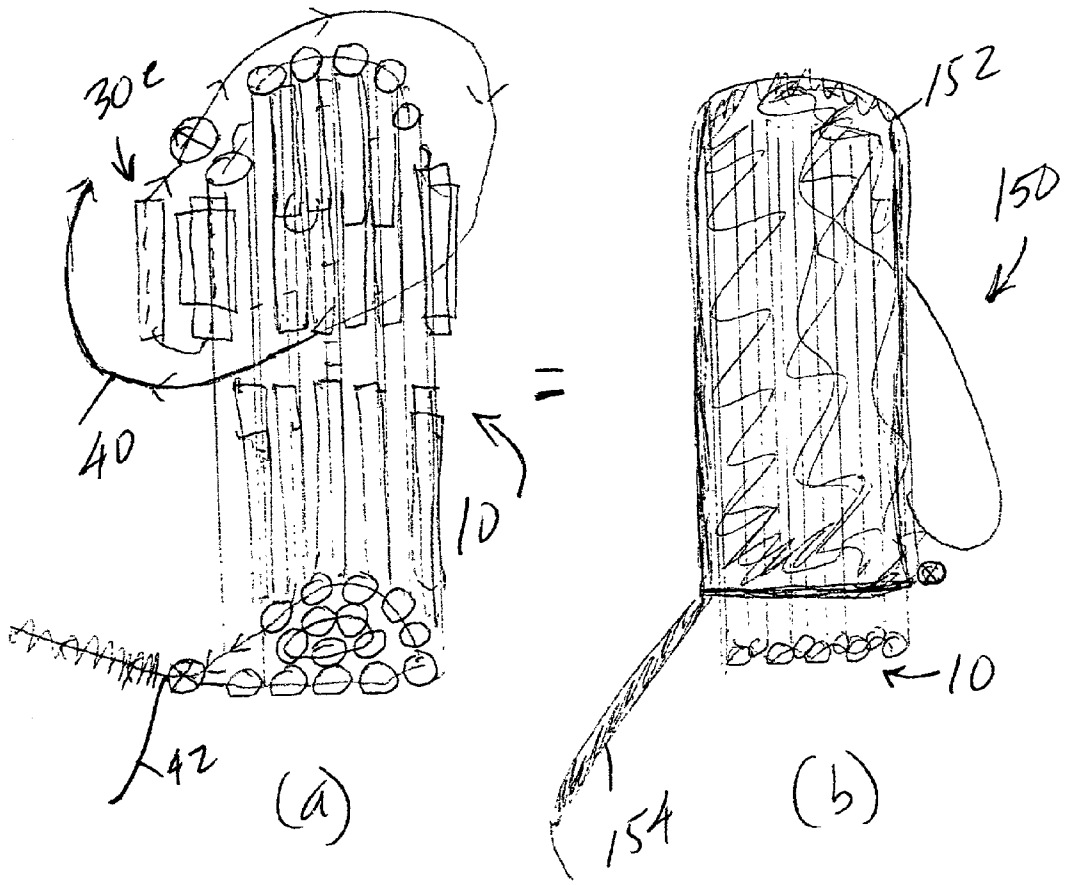

FIG. 10

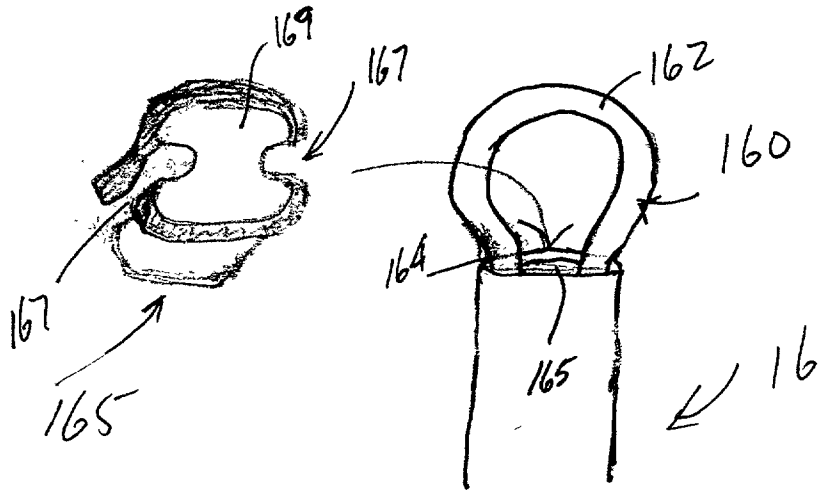

FIG. 11

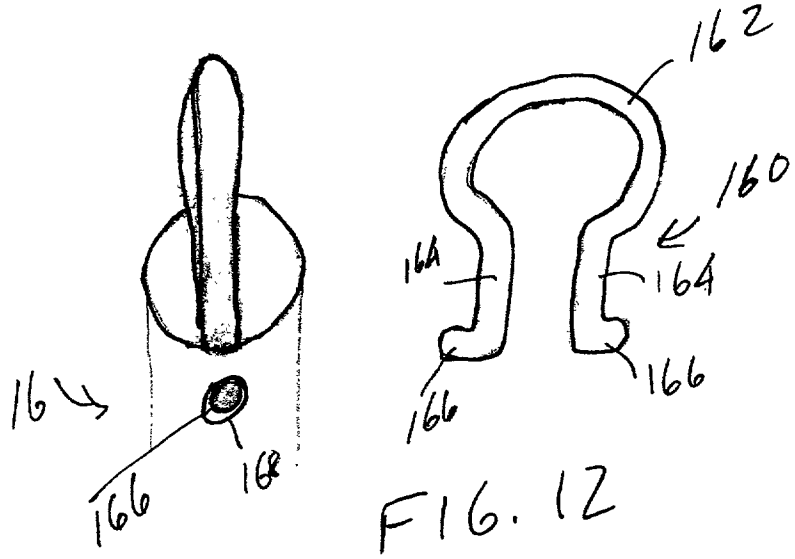

FIG. 12

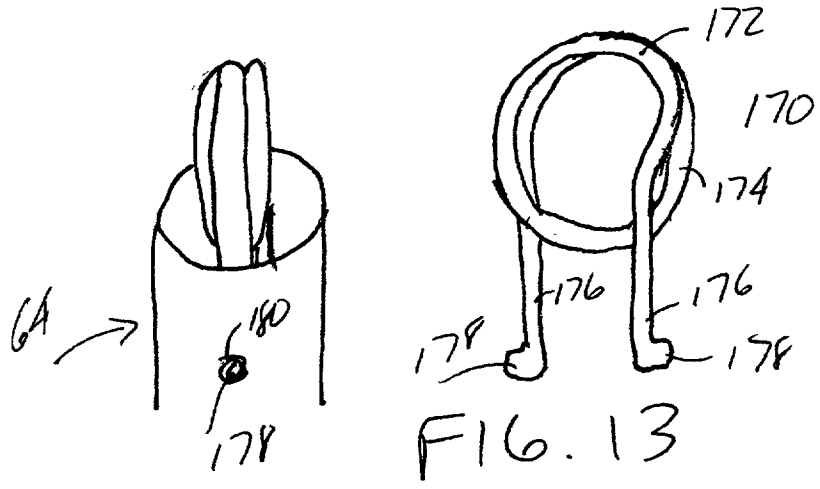

FIG. 13

COLLAPSIBLE STRUCTURAL FRAME STRUT WITH POP-IN CONNECTOR

FIELD OF THE INVENTION

[0001] The present invention relates to the field of collapsible support structures.

RELATED APPLICATIONS

[0002] The present invention is related to the application entitled COLLAPSIBLE STRUCTURAL FRAME, filed on the same date as the present invention with the same inventor and under Attorney Docket Number 2058-300, the disclosure of which is hereby incorporated by reference.

BACKGROUND OF THE INVENTION

[0003] It is well known in the art to provide collapsible support structures for a variety of applications, e.g., supporting other structures, e.g., expandable antennae, e.g., for transportation into and use in outer space, ease of construction of relatively rigid building frames, and supporting such things as tents and other structures having forms composed of panels of material, e.g., cloth, canvas, plastic or other pliable fabrics and fabric-like material, including synthetics, e.g., Orlon, Gore-Tex and the like.

[0004] U.S. Pat. Nos., 3,968,808 and 4,026,313, each entitled COLLAPSIBLE SELF-SUPPORTING STRUCTURE, issued to Ziegler, respectively on Jul. 13, 1976 and May 31, 1977 each disclose collapsible structural support frames having a geodesic form. The '808 patent discloses: "[a] collapsible, self-supporting structure is disclosed wherein the structure is made up of a network of rod elements pivotally joined at their ends and forming scissors-like pairs in which rod element crossing points are pivotally joined. The network consists of a plurality of pairs of inner and outer apical points where groups of radiating rods are pivotally joined. The outer apical points lie on a surface of revolution such as a spherical section and each group of rods radiating from an inner apical point lie essentially in a common plane whereby to effect the self-supporting action. For any pair of apical points the group of rods defining the inner apical point radiate in their common plane and join rods of other groups at the surrounding outer apical points." Abstract. The '808 patent states that "[a] preferred universal pivotal connection at the apical points is illustrated in FIGS. **12-14**. As shown, each element has a double-ended fan flot **130** through which a wire ring **132** passes so as to allow universal movement of the rod elements. In the embodiment of **FIG. 1**, there may be as few as three elements intersecting at an apical point and as many as six elements, as shown." Col 5, line 66-Col. 6, line 4. The '808 patent also notes that: "[r] Referring more particularly at this time to **FIG. 25**, certain principles of the construction according to **FIG. 1** will be apparent therefrom. The **FIG. 1** construction may be further explained in terms of conventional geodesic nomenclature. Specifically, the **FIG. 1** embodiment is constructed as a four frequency icosahedron in which one of the triangular regions is illustrated in **FIG. 25** and, in **FIG. 26**, all of the triangular regions are shown but laid out in flat form so as to give a better understanding of the elements involved." Col. 7, lines 53-61. Similarly, the '313 patent discloses a "[s]elf-supporting structures and panels of diverse shapes are disclosed in which basic assemblies of crossed rod elements are employed to achieve the desired shape. Further, the crossing points of crossed rod elements in the structure involved may include limited sliding connections which effect transfer of collapsing force to other crossing points which are pivotally joined. An improved hub structure for pivotally joining ends of the rod elements at the outer and inner apical points is also disclosed." Abstract.

[0005] U.S. Pat. No. 6,089,247 "[a] collapsible frame for use in erecting tents, insect screen rooms, shade awnings, canopies and the like at camp sights, back yard patios and other outdoor venues. The collapsible frame includes a plurality of telescopic legs for providing vertical structural support and a plurality of corner pin joints with one of the pin joints fixedly mounted upon a corresponding one of each of the telescopic legs. A plurality of horizontal support arms is included with one of the arms positioned between every adjacent pair of telescopic legs and attached to the corresponding corner pin joints. A mid-span hinge which includes a sliding sleeve is centrally positioned along each of the horizontal support arms. The mid-span hinge is flexibly collapsible when the sleeve is disengaged and is rigidly inflexible when the sleeve is engaged. A bottom slider is adjustably mounted upon each of the telescopic legs and is attached to the horizontal support arms which are connected to the corresponding corner pin joint. Finally, a plurality of top support members is included where each is anchored in a corresponding corner pin joint for stabilizing the frame. In the present invention, the telescopic legs, mid-span hinges and bottom sliders each cooperate to collapse the frame." Abstract. The '247 patent also disclosed that "[c]entrally positioned along each of the four horizontal support arms **162** is a mid-span hinge **188** clearly shown in **FIGS. 1, 3** and **4**. Each of the four horizontal support arms **162** is circular and comprised of a lightweight material such as, for example, aluminum. The length of each of the four horizontal support arms **162** is interrupted approximately at the center of the span thereof forming two opposing, open-ended mid-span terminal ends **190** and **192** as shown in **FIG. 3**. Extending outward from each of the open-ended terminal ends **190** and **192** is a pair of connectors **194** and **196** having penetrations formed therethrough. Connectors **194** and **196** may be comprised of plastic having an outer surface which exhibits a low coefficient of friction such as Teflon. Positioned between the pair of connectors **194** and **196** is a pair of parallel positioned plates **198** and **200** swivelly attached to the corresponding connectors **194** and **196**, respectively, of each of the horizontal support arms **162**. The parallel positioned plates **198** and **200** are attached to each of the corresponding connectors **194** and **196** as by, for example, use of a pair of rivets **202** through the penetrations formed in the connectors **194** and **196** as is shown in **FIG. 3**. Mounted over each of the horizontal support arms **162** and the mid-span hinge **188** is a sliding sleeve **204** shown in **FIGS. 1, 3** and **4**. The sliding sleeve **204** is cylindrical in shape and can be comprised of aluminum or a high strength plastic material such as polyvinylchloride (PVC). Further, the sliding sleeve **204** can have an inner surface (not shown) coated with a low friction material such as Teflon to minimize resistance to sliding. In the view of **FIG. 3**, the sliding sleeve **204** is disengaged and the mid-span hinge **188** is exposed and capable of swivelling. Under these conditions, the mid-span hinge **188** is flexibly collapsible and cooperates with the telescopic legs **108** and the bottom slider **130** to enable the collapsible frame **100** to collapse into the

reduced size posture as clearly shown in **FIG. 9**. Located on the surface of the horizontal support arm **162** is a first mechanical stop **206** as shown in **FIG. 3**. The first mechanical stop **206** serves to limit the travel of the sliding sleeve **204** away from the mid-span hinge **188**." Col 7, line 47-Col. 8, line 11. The '247 patent goes on to explain that "[e]ach of the top support members **174** comprise two portions best shown in **FIG. 6**. An outer portion **220** is shown fitting over the end of an inner portion **222** at a lip **224**. With this arrangement, the inner portion **222** can be separated from the outer portion **220** under pressure. Running the length through the interior of each of the top support members **174** is an elastic cord **226** as shown in **FIG. 6**. The elastic cord **226** can be connected on each of its ends to the interior of each of the top support members **174** in any suitable manner such as, for example, by tying. The function of the elastic cord **226** is to urge the mating of the outer portion **220** with the inner portion **222** of the top support member **174** while simultaneously enabling them to be separated. This design facilitates the collapsing of the superstructure **106** but also prevents the outer portion **220** from being separated from the inner portion **222**." Col. 9, lines 7-22.

[**0006**] U.S. Pat. Nos. 5,797,412 and 5,632,293, each entitled COLLAPSIBLE SHELTER WITH FLEXIBLE, COLLAPSIBLE CANOPY, Aug. 25, 1998 and May 27, 1997 to Carter, disclose that "[t]he collapsible shelter includes a truss and canopy framework that permits a flexible, collapsible canopy to be moved between a raised position and a lowered position. The collapsible shelter includes at least three legs supporting flexible poles removably mounted to the tops of the legs and forming the framework of the canopy. X-shaped truss pairs of link members are connected to each of the legs on each side of the shelter between adjacent legs." Abstract. The '412 and '293 patents also disclose that "the present invention provides for a collapsible shelter with a flexible, collapsible canopy framework that can be raised to provide increased headroom, strength and stability, and can be lowered to provide a reduced profile to the wind. The invention provides for a collapsible shelter having at least three legs supporting a collapsible canopy supported by flexible poles removably mounted to the tops of the legs. At least two perimeter truss pairs of link members are connected to each of the legs on each side of the shelter between two adjacent legs. Each of the X-shaped perimeter truss pairs of link members are essentially identical, and include two link members connected together by a central pivot, with the first link member having an outer end connected to the upper end of one leg, and the second link member having an outer end slidably connected to the leg. The first and second link members are pivotally connected together in a scissors configuration so as to be extendable from a first collapsed position extending horizontally between two of the legs to a second extended position extending between the legs. The two perimeter truss pairs of link members on each side are connected together at their inner ends. The collapsible shelter preferably has four legs, but can also have three, five, or more legs. At least two flexible pole members are also provided that are removably mountable to the upper ends of the legs of the shelter to extend across the shelter to form a structure for a flexible, collapsible canopy. The canopy also preferably includes a cover secured to the upper ends of the legs. In a currently preferred embodiment of the invention, the flexible pole members comprise a plurality of segmented poles formed from a plurality of pole sections that are removably connectable together, and that are removably mounted in indexing holes in hinge means affixed to the upper ends of the legs, and the pole members are similarly removably connected together by a central hub that is preferably permanently connected to an inner end of one of the pole members. When the pole members are connected together and inserted in the hinge means of the legs, the pole members forming the canopy can flex and move between a normal raised position and a lowered position by exertion of a downward force on the top of the canopy, such as by a strong wind, to reduce the profile of the shelter that would be exposed to the wind and still provide rain run off. To facilitate this aspect of the invention the flexible poles in a currently preferred embodiment are made of a composite material such as fiberglass, but a variety of materials such as metal tubing and other composites can be used for such purposes. Col. 1, line 53-Col. 2, line 34.

[**0007**] The '412 and '293 patents go on to disclose that "[i]n the currently preferred embodiment, four flexible pole members **82** are provided, corresponding to the number of legs, as is illustrated in **FIGS. 6, 7** and **12**. While a variety of materials such as metal tubing, composite tubing (tubing made of resin impregnated fibers) or solid composite poles may be used, the flexible pole members currently preferably each comprise segmented flexible poles formed from two fiberglass pole sections **84** that are removably connectable together, with an inner end **86** of one of the pole sections bearing a metal jacket **88**, made of aluminum or steel for example, into which the adjacent inner end **90** of the other pole section is insertable, to join the pole sections together. The pole sections are preferably hollow, and an elastic cord **92** runs through the longitudinal centers of the pole sections. An outer end **94** of the cord of each pole member extends through an indexing aperture **96** in the hinge means, and is secured to the hinge means such as by a knot. The inner end **98** of the cord is secured to the inner end **100** of the pole member, such as by a knot, so that the pole sections of the pole member are biased together. The pole members are removably receivable for mounting in the indexing apertures **96** in the hinge means affixed to the upper ends of the legs. In a currently preferred embodiment, a central hub member **102**, having four symmetrically located indexing holes **104** for removably receiving the inner ends of three pole members, and for permanently receiving the inner end of a fourth pole member, mounted in a hub indexing hole, such as by an adhesive such as epoxy, for example, for joining the pole members together." Col 5, lines 14-38.

[**0008**] U.S. Pat. No. 4,074,682, entitled COLLAPOSIBLE TENT FRAME, issued to Yoon on Feb. 21, 1978 discloses "[a] A collapsible tent frame has all of its parts permanently connected to one another to provide a complete single unit and is easily changeable between a fully deployed condition, a partially deployed condition and a compact collapsed condition by simple manual manipulations. In either its fully deployed condition or its partially deployed condition, the frame is adapted to receive and support a tent fabric or other covering to provide a shelter lending itself to a variety of uses." Abstract. The '682 patent also discloses that "[t]he frame is unitized insofar as all of its parts are permanently connected with one another and it is shiftable between a compact collapsed condition and at least one deployed condition." Col 1, line 67-Col. 2, line 2. In addition the disclosure of the '682 patent notes that "[a]

more specific aspect of the invention resides in each leg of the frame including an inboard section, an intermediate section and an outboard section with the outboard section being pivotally connected with the intermediate section for movement relative to the intermediate section between a folded condition and a spread condition. The intermediate section is also pivotally connected to the inboard section for pivotal movement between folded and spread conditions relative to the inboard section; and likewise, as previously mentioned, the inboard section is movable relative to the hub between deployed and collapsed positions. When all of the inboard sections are deployed relative to the hub and all of the intermediate sections are spread relative to the inboard sections, the outboard sections may be either spread relative to the intermediate sections to provide a fully deployed frame providing one form of structure, or the outboard sections may be folded relative to the intermediate sections to provide a partially deployed frame providing another form of structure. In either the fully deployed condition or the partially deployed condition of the frame, struts extending between adjacent pairs of legs aid in controlling the angular spacing of the legs and in thus rigidifying the frame, the struts each being made of two arms pivotally connected to one another and to their associated legs to permit collapsing of the frame." Col 2, lines 26-51. The specification of the '682 patent goes on to say that"[i]n the deployed condition of the frame, the arms **74**, **74** of each strut are locked in their relatively aligned positions shown in **FIGS. 2 and 16** by a suitable releasable locking means such as the sleeve **80** shown in **FIGS. 13, 14** and **15**. That is, in the aligned and locked arm situation of **FIG. 13**, the sleeve **80** fits over the joint between the two arms to prevent relative pivotal movement between such arms; but, the sleeve is slidable to the position of **FIG. 15** at which the joint is freed to allow relative rotation between the arms. A spring **82** in the sleeve frictionally holds the sleeve to whatever position it is moved." Col 5, lines 32-41.

[**0009**] U.S. Pat. No. 5,930,971, entitled BUILDING CONTRRUCTION WITH TENSION SUPPORT SYSTEM, issued to Ethridge on Aug. 3, 1999 discloses "[a] structural system for a building wherein multiple elongate rigid structural members, in the nature of posts and beams, include internal tensioning cables which, upon an end joining of the structural members, are interlocked and tensioned to each other and relative to a fixed foundation." Abstract. The specification of the '971 patent goes on to say that "[b] asically, the construction system utilizes a plurality of rigid, compression-accommodating structural members, preferably tubular, defining upright support posts, roof beams, cross beams, and the like. The rigid structural members are stabilized by elongate tension members, generically herein referred to as cables, received through each of the structural members and end joined, upon a proper tensioning thereof, at or immediately adjacent the adjoining ends of the structural members. The joined cables ultimately extend through uprights and are in turn anchored to an underlying foundation either in the nature of a solid cast concrete slab with anchoring loops extending therefrom, or individually cast footings associated with each upright." Col. 1, lines 40-53.

[**0010**] U.S. Pat. Nos. 6,028,570, entitled FOLDING PERIMETER TRUSS REFLECTOR, ISSUED TO Gilger et al. on Feb. 22, 2000 discloses a "collapsible support structures, fold-up perimeter trusses, principally for deployable high frequency parabolic antennas used in spacecraft." Col. 1, lines 5-7. U.S. Pat. No. 5,871,026, issued to Lin on Feb. 16, 1999, entitled UMBRELLA SHAPE TWO LAYERS FOLDABLE TENT, disclosed a "two layers half automatic foldable tent is comprised of a framework, an umbrella surface, and a tent cloth. The framework is enclosed on the outside of the tent, while the umbrella surface is expanded on the framework above the tent cloth, wherein the framework is presented as an expanding structure. The opening and closing of the umbrella frame is completed by a controlling rope. Any user may easily install the tent, the lower primary frame of the umbrella frame may be folded upwards as the framework is closed, thus it may be stored conveniently and may be carried. Another, since in the present invention, the umbrella surface and tent cloth are designed as the two layers type thus the sunlight, rain water and snow will not contact the tent directly, and the people within the tent will be safe and comfortable and the lifetime of a tent is prolonged." Abstract.

[**0011**] U.S. Pat. No. 4,998,552, entitled GEODETIC TENT STRUCTURE, issued to Niksic et al on Mar. 12, 1991, discloses a "self supporting collapsible tent structure having a tension bearing polygonal shaped floor member defining a first tent level, a plurality of hub members each carrying a plurality of sockets which are pivotal about axes which are co-planer and are interrelated one to the other as the sides of polygon, a series of said hub members disposed in a plane at a second tent level which is spaced apart from said first tent level and whose sockets are pivotal in a first direction, and additional series of said hub members disposed in a plane at a third tent level which is spaced apart from said second tent level and whose sockets are pivotal in a second direction, opposite to the said first direction, a single, apex forming hub member disposed at a fourth tent level and whose sockets are pivotal in said first direction, a first plurality of compression rods, the ends of which are seated in the said sockets of the hub members in slightly curved polygonal planes defined and bounded by the rod members and a second plurality of compression rods, one end of which are seated in sockets of the hub members at the second tent level and the other end of which are connected to the perimeter of the floor member." abstract.

[**0012**] U.S. Pat. No. 4,583,956, issued to Nelson on Apr. 22, 1986, entitled RIGID AND TELESCOPING STRUT MEMBERS CONNECTED BY FLEXIBLE TENDONS, discloses a "construction kit consisting of rigid or telescoping elongate strut members which may be attached together by flexible tendons to form a variety of designs and model structures. The invention places no limits on the number of struts which can be attached at one vertex or their relative angles, and the length of each strut may be varied within broad limits. Furthermore, the end of one strut may be attached not only to the end of another, but to any point along its length. Accordingly, an almost unlimited variety of constructions is possible." Abstract.

[**0013**] U.S. Pat. No. 4,438,876 discloses a "back pack frame is comprised of tubular frame members which upon separation permit extraction of pairs of tent frame components stowed therein. The frame members and tent frame components are thereafter rejoinable to provide a geodesic tent frame. The tent frame components, upon extraction from a stowed position within the back pack frame members, are positioned in a divergent manner as permitted by a wire hinge component interconnecting the paired tent frame

components. The back pack frame members are slotted at their ends to permit such divergent positioning of the associated tent frame components and include limit stops to prevent complete separation of the tent frame components from their frame member. The back pack frame members themselves are coupled to one another by flexible wire inserts and, in a modified form, by molded socket members. A back pack bag may be supported either externally on the back pack frame or, alternatively, over frame members." Abstract. The disclosures of the above referenced prior art are hereby incorporated by reference.

[0014] None of the foregoing discloses or suggests solutions to the problems with the foregoing which do not fully satisfy the needs for s compact, light weight, fully portable and exceptionally strong, once assembled, collapsible support structure. The present invention satisfies those needs more effectively than the above described prior art.

SUMMARY OF THE INVENTION

[0015] A method and apparatus is described for providing a collapsible support structure, which may comprise a plurality of interconnected frame sections each of which may comprise a first elongated rigid member having a first end and a second end; a second elongated rigid member having a first end and a second end; wherein the first end of the first elongated rigid member and the second elongated rigid member are hingedly joined; a collapsible elongated member which may comprise an elongated flexible tensioning member connected between the second end of the of the first elongated rigid member and the second end of the second elongated rigid member; a first hollow tubular rigidizing member extending along a portion of the length of the elongated flexible tensioning member; a second hollow tubular rigidizing member extending along essentially the remainder of the length of the elongated flexible tensioning member; and a rigidizing sleeve member slideably mounted on the first or the second hollow tubular member and sized to slideably engage the other of the first and second hollow tubular when the first and second hollow tubular rigidizing members are essentially axially aligned and the rigidizing sleeve member is positioned to slideably engage each of the hollow tubular rigidizing members to form a collapsible elongated tubular member extending essentially between the second ends of each of the first and second elongated rigid members and having the elongated flexible tensioning member axially disposed therein. The apparatus and method may employ the interconnected frame sections on the form of a triangle or a parallelogram, and may form a portion of a geodesic structure, such as a truncated icosahedron, which in turn may have first and second lesser circle polygonal shapes, with the hingedly joined first ends of the first and second elongated rigid members being joined at a corner of the first lesser circle polygonal shape and the collapsible elongated tubular member forming a side of the second lesser circle polygonal shape. The method and apparatus may use one-piece elongated rigid members. The sections may form parallelograms using first, second and third elongated rigid members and first and second rigidizing means, with each of the rigidizing means in each section forming a side of a separate one of the lesser circle polygonal shapes.

BRIEF DESCRIPTION OF THE DRAWINGS

[0016] **FIG. 1** shows a basic structure for a collapsible support structure frame according to an embodiment of the present invention;

[0017] **FIG. 2** shows schematically the geodesic structural relationship of opposing vertical members in a level of a geodesic structure according to an embodiment of the present invention;

[0018] **FIG. 3** shows a geodesic structural relationship of portions of the structure according to the embodiment of the present invention shown in **FIGS. 1 and 2** in relation to lesser circles circumscribing the structure in horizontal planes at certain levels of the structure,

[0019] FIGS. **4**(*a*) and **4**(*b*) show in more detail a rigidizing means according to an embodiment of the present invention.

[0020] **FIG. 5** is a more detailed view of an embodiment of an upper terminal junction according to the present invention.

[0021] **FIG. 6** is a perspective view of a portion of the present invention showing an entire vertical section from the ground to the apex of an embodiment of a collaplible support structure according to the present invention.

[0022] **FIG. 7** is a plan view of an embodiment of a collapsible support structure according to the present invention in its erected state.

[0023] **FIG. 8** shows a partially cut away side view of an embodiment of a collapsible support structure according to the present invention in an intermediate stage of being collapsed and stored.

[0024] **FIG. 9** shows a side view of the embodiment of **FIG. 8** in the next succeeding stage of being collapsed and stored.

[0025] **FIG. 10**(*a*) shows the embodiment of **FIGS. 8 and 9** in a final stage of being collapsed for storage and **FIG. 10**(*b*) shows the stage of being placed into a storage bag.

[0026] **FIGS. 11, 12** and **13** show alternative possible improved embodiments for the eyelet joiners shown in earlier illustrated embodiments according to the present invention.

DETAILED DESCRIPTION OF THE PREFERRED EMBODIMENTS

[0027] Turning now to **FIG. 1** there is shown a basic structure for a collapsible support structure frame **10** according to an embodiment of the present invention. The structure **10** may be a truncated icosahedron geodesic structure. Geodesic domes are sliced from a complex polyhedra which has a large number of triangular faces, all approximately, but not quite, equilateral. See. Kenner, Geodesic Math and How to Use It, University of California Press Berkeley, 1976, Chapter 7, the disclosure of the entire volume of which is hereby incorporated by reference. In the structure of the present inventions, however, the triangular faces on the side walls of the structure may be equilateral. The struts bounding the triangular faces in a geodesic dome may follow the paths of great circles that are concentric with the center of the domed structure, some whole, but more often inter-

rupted. The cohesion of the whole, like that of a Tensegrity, is both compressive and tensile, with the tension system running along the outer surfaces of the struts, which are at the same time in compression. The structure **10** as shown may include a plurality of generally vertical sections **12***a, b, c, d* and *e*. Each of the sections **12***a, b, c, d* and *e* may include a first elongated rigid member **14***a,* a second elongated rigid member **14***b* and a third elongated rigid member **14***c* where the third elongated rigid member **14***c* may also comprise the first elongated rigid member in an adjoining section **12***b,* which may also contain a second elongated rigid member **14***b*' and a third elongated rigid member **14***c*'. Each of the sections **12***a, b, c, d* and *e* may have an upper collapsible member **30***a, b, c, d* and *e* and a lower collapsible member **32***a, b, c, d* and *e*, more fully described below. Each of the sections **12***a, b, c, d* and *e* may have a roof section **20***a, b, c, d* and *e,* which may be comprised of a first roof rigid member **22***a* and a second roof rigid member **22***b,* where the second roof rigid member **22***b* may be the first roof rigid member in the adjoining roof section **20***b* which can also include a second roof rigid member **22***c*. It can bee seen that each of the sections **12***a, b, c, d* and *e* form the essentially vertical side walls of the structure with the collapsible members **30***a, b, c, d* and *e* and the collapsible members **32***a, b, c, d* and *e* forming the sides of a pentagon polygon. The collapsible sections **32***a, b, c, d* and *e* can form the base of the collapsible support structure **10** and the collapsible members **30***a, b, c, d* and *e* may form the top of the essentially vertical side walls of the support structure **10** formed by the adjoining sections **12***a, b, c, d* and *e*.

[**0028**] As shown in **FIG. 2, a** characteristic of a geodesic structural form such as the icosahedron of FIGS. **1-3** is that the respective upper and lower ends of the opposing vertical sides rigid members, e.g., **14***c* and **14***b*'"form equivalent opposing arcs of a greater circle concentric with the geometric center of the structure **10** if it were not truncated to form the base with the collapsible members **32***a, b, c, d* and *e,* i.e., if it had a structure equivalent to the roof structure attached to the base members **32***a, b, c, d* and *e* in the nature of a complete icosahedron.

[**0029**] Turning now to **FIG. 3** there is shown another characteristic of a truncated icosahedron **10** according to such structures as employed in accordance with the present invention. Each of the upper and lower collapsible members, respectively **30***a, b, c, d* and *e* and **32***a, b, c, d* and *e* for the sides of a pentagon which is circumscribed by a lesser circle in the plane of the pentagon and intersected by the corners of the pentagon. it will also be appreciated by those skilled in the art that the respective pentagons formed by the collapsible members **30***a, b, c, d* and *e* and **32***a, b, c, d* and *e* may be of the same size or of a different size, and in the latter event, the vertical walls of the structure as shown in FIGS. **1-3** could slant slightly inwardly or slightly outwardly toward the top portion of the wall formed by the collapsible members **30***a, b, c, d* and *e,* accordingly. In the truncated icosahedron **10** at six points along the top of the vertical walls formed by the sections **12***a, b, c, d* and *e* five triangles meet at each vertex, e.g., **80***a* or **80***b* shown in FIGS. **1-3**. At the vertexes along the base formed by the collapsible members **32***a, b, c, d* and *e*, only three triangles meet at each vertex. Each of the five vertices of five intersecting triangles in a geodesic structure is called a pent after the pentagons that surround them. From each of the pents radiate portions of five great circles each of which has its center at the geometric center of the structure, were it a full icosahedron as opposed to a truncated one as shown. Each of the great circles sets of about 63.5° before intersecting the opposite end of the rigid structural member, e.g., **14***c* or **14***b*'" as shown in **FIG. 2**, radiating from the pent, generally in the plane of the great circle. Following the lead of either of the pentagon edges forming the base or the top of the vertical walls formed by sections **12***a, b, c, d* and *e* one may trace a circuit around the geodesic sphere forming a lesser circle with its center at the center of the pentagram, girdling the sphere in generally parallel planes, e.g., like the trop latitudes on the globe of the earth. In the pure geodesic dome, the struts forming the arcs of the lesser circles are almost, but not quite coplanar. Of course, the vertically extending struts can be adjusted as necessary and desired to correct this lack of co-planarity. Truncated dome design of the present invention is completed by placing the base formed by the collapsible members **32***a, b, c, d* and *e* on the ground with the collapsible members **32***a, b, c, d* and *e* and **30***a, b, c, d* and *e* in the rigidized configuration.

[**0030**] Turning now to **FIG. 4**(*a*) the apex **82***b* of the section **12***a* of the vertical walls of the structure **10** is shown in more detail to explain the interrelationship between the rigid members **14***a, b* and *c*, and the collapsible members **30***a* and by example **30***b* forming the section **12***a*. Each of the elongated rigid members **14***a, b*, and *c* may consist of an elongated wooden dowel **16**. Each of the elongated rigid dowels **16** may have attached to either end thereof an eyelet, e.g., a screw-in eyelet **18**. An upper flexible circumferential tensional support member, e.g., a length of rope (not shown) may extend through the eyelets **18** on the upper ends of the dowels **16** (not shown)—forming the elongated rigid structural members **14***a* and **14***b,* which may be positioned adjacent to each other forming an upright triangular portion **50***a* (**FIG. 2**) of the section **12***a* along with the lower collapsible member **32***a*. A lower flexible tensional circumferential support member, e.g., a length of rope **42** or cable, may extend through the lower collapsible support member **32***a* (shown in phantom by dotted/dashed lines) and through the pair of eyelets **18** on the lower ends of the dowels **16** forming the elongated rigid members **14***b* and **14***c*. Similarly the upper length of rope (not shown) extends through the upper collapsible member **30***a* between the joined ends of the elongated rigid structural members **14***a* and **14***b* and the upper end of the elongated rigid structural member **14***c,* and the lower length of rope **42** extends between the eyelets **18** on the lower ends of the elongated rigid structural members **14***b* and **14***c* that are joined together thereby, such that the elongated rigid structural members **14***b* and **14***c* along with the upper collapsible member **30***a* form an inverted triangular portion **52***a* (**FIG. 2**) of the section **12***a*. Thus it can be seen that the section **12***a* can be in the form of a parallelogram, with the corners of the parallelogram formed by upper junctions **80***a* and *b* and the lower junctions **82***a* and *b*, with the upper collapsible member between **80***a* and *b* forming the base of the inverted triangular portion **52***a* and the lower collapsible member **32***a* forming the base of the upright triangular portion **50***a* of the section **12***a*.

[**0031**] In the embodiment shown in **FIG. 4**(*a*) it can be seen that the collapsible member **30***a* and **32***a* (not shown in **FIG. 4**) may be formed by a pair of hollow cylindrical tubes **62** and **64** and an outer tubular sleeve **70**. In the embodiment shown in **FIG. 4** the pair of tubes **62, 64** extend substantially the length of the base of the respective upright and inverted

triangular portions **50***a* and **52***a* and the outer sleeve **70** slideably engages both the tube **60** and the tube **62** when the respective upper or lower collapsible member, e.g., lower collapsible member **32***a* is in the rigidized configuration. The abutment of the tubes **60** and **62** at junction **72** is illustrated in **FIG. 4**(*a*). This abutment serves to hold the rigidized collapsible member **32***a* in compression when the tensile forces exerted, e.g., by tightening the rope **42** around the lesser circle traveled by the rope **42** (along with the similar action of the upper rope (not shown) gives the structure **10** its structural rigidity.

[**0032**] Turning now to **FIG. 4**(*b*) it can be seen that the outer sleeve **70** is of a length that it can be slideably moved to enclose only the one or the other of the two tubes **60**, **62**, such that the rigidity provided by the sleeve **70** engaging both the tubes **60** and **62** is eliminated. This enables the respective ends of the elongated rigid structural members, e.g., **14***a, b* and *c,* the former two of which were maintained in separation by the collapsible member **32***a* being rigidized, to move toward each other, enabling collapsing and folding of the structure **10**, when done in conjunction with similarly removing the rigidity of each of the collapsible members **30***a, b, c, d* and *e* and **32***a, b, c, d* and *e.*

[**0033**] Turning now to **FIG. 5** there is shown a more detailed view of an embodiment of an upper terminal junction or apex **80**(*a*) according to the present invention. The eyelets **18** for each of the dowels **16** forming verticle poles **14***a* and **14***b* and roof pole **22***a* are joind by having the rope of cable **40** forming the upper flexible circumferential support member threaded through them and passing through the adjacent hollow tubes **64** of the upper collapsible member **30***e* and **62** of the upper collapsible member **30***a,* with the verticle poles **14***a* and **14***b* forming a triangular portion of section **12***a* and roof pole **22***a* extending to the top of the structure **10**. This is shown in further detail in **FIG. 6**. Turning to **FIG. 6** there is shown a perspective view of a portion of the collapsible structure **10** according to the present invention showing an entire vertical section from the ground to the apex of the embodiment **10**. **FIG. 6** shows that the roof poles **22***a, b, c, d* and *e* are joined at the top apex of the structure, e.g., by an apex ring **120**. The apex ring may be, e.g., s ring that has a hinged opening allowing the ring to be inserted through the eyelets **18** and the upper ends of each of the roof poles **22***a, b, c., d* and *e*. Alternatively the apex ring **120** may simply be a piece of rope or cable threaded through the eyelet **18** openings.

[**0034**] Turning now to **FIG. 7** there is shown a plan view of an embodiment of a collapsible support structure **10** according to the present invention in its erected state.

[**0035**] Turning now to **FIG. 8** there is shown a partially cut away side view of an embodiment of a collapsible support structure according to the present invention in an intermediate stage of being collapsed and stored. In this view one section containing portions bottom collapsible support members **32***b* and **32***c* and upper horizontal collapsible support members **30***b* and **30***c* are omitted. In the view of **FIG. 8**, there are shown a pair of anchor rings **130**. The anchor rings **130** may be in the form of a circular ring containing crossed members. The anchor rings **130** are constructed so as to easily connect one end of an upper horizontal flexible circumferential support **40** or lower horizontal flexible circumferential support **42**, e.g., a cable or rope, to the anchor ring, as by tying, welding, crimp locking or the like. and such that the anchor ring will not pass into the adjacent hollow tube **62** or **64**, as the case may be.

[**0036**] As shown in **FIG. 8** the sections **12***a, b, c, d* and *e* are laid out with the anchor rings tight against the apexes **82***a* and **80***a* respectively and with the upper and lower horixontal flexible circumferential support cable or ropes **40** and **42** extending out of one half of the apex **82***e* and out of the apex **80***e*, and through upper collapsible structureal support member **30***e*.

[**0037**] Turning now to **FIG. 9** there is shown the initial stage of folding the collapsible horizontal support members between the respective adjacent vertical poles. The roof posts **22***a, b, c, de* and *e* are then folded downwardly to the inside of the collapsed structure as shown in **FIG. 10**(*a*), with the lower horizontal flexible support member **42** pulled to tighten the bundle, and with the portion of the upper horizontal flexible support structure wrapped around the upper portion of the collapsed bundle to further tighten the collapsed bundle prior to insertion of the bundle into the storage bag as Shown in **FIG. 10**(*b*).

[**0038**] **FIGS. 11, 12** and **13** show alternative possible improved embodiments for the eyelet joiners shown in earlier illustrated embodiments according to the present invention. In **FIG. 11** and **FIG. 12** there is shown one version of a pop-in connector **160**, which consists of a loop **162** and a pair of straight leg portions **164**, along with a protrusion **166** at the terminal end of the straight leg portion **164**. In the embodiment shown in **FIG. 11** the loop **162** can used in conjunction with a locking insert **165**. The locking insert **165** is constructed to have a diameter along at least one axis that allows the structure, which may be constructed of a rigid though partially flexible material such as nylon, so as to fit snuggly within the end of a hollow tube. In the case of **FIG. 11** the hollow tube is shown to have replaced the wooden dowels **16** as, e.g., the vertical structural members. The loop material can be made from, e.g., stainless steel rods, e.g., RB00156-CDM-072, 5⁄32" round 304 or RB00156-CDM-144, 5⁄32" round 304 sold by ACE Stainless Supply of Santa Ana Calif. In operation the pop-in connector of **FIG. 11** is constructed to have a spring-like mode of operation with the protrusions biased to press against the inner surface of the hollow tube **16**. Insertion into the grooves **167** of the locking insert **165**, the protrusions are forced even more toward engagement with the inner surface of the hollow tube **16**. In addition, depending upon the direction of the spring action of the leg portions, they may be biased against the surface of the respective groove **167** to further frictionally hold the pop-in connector **160**. In the embodiment of **FIG. 12**, the hollow tube has a pair of opposing holes **168** and in this case the legs **164** of the loop **162** of the pop-in connector **160** are springedly biased outwardly so as to engage the protrusions **166** in the holes **168** to hold the pop-in connector in place.

[**0039**] As shown it can be seen that the pop-in connectors **160** can be of great use, e.g., if a pole/strut, e.g., **14** or **16** were to break while the structure is erect. Without having to essentially disassemble the structure frame **10** by unthreading the entire, e.g., upper flexible circumferential support **40** or lower flexible circumferential support **42** to rethread it through an eyelet such as the eyelets **18** discussed above, the pop-in connector can be used to selectively engage one of

the supports **40**, **42** at the respective end of a pole/strut at only the specific location of the pole/strut being replaced.

[**0040**] One possible disadvantage of the pop-in connector **160** described above is that over time the flexible support **40**, **42**, if it is made of fiber as opposed to being a metal cable, could fray on the ends of the tubular pole/strut. Alternatively, the metal capable used as a flexible support **40** or **42** may wear down the tubular ends of the pole/strut. To prevent either of these, at the loss of flexibility in replacing poles/struts while the structure is erected, a pop-in connector such as the pop-in connector **170** shown in **FIG. 13** may be employed. The pop-in connector of FIG. **13** has two loops, keeping the flexible circumferential support **40**, **42** away from the tubular end of the respective pole/strut.

[**0041**] It will be understood that the tensioning means at, e.g., the base and the top of the vertical side walls of the structure **10** may be formed by rope or cable or the like and may be brought into tension simply by pulling on the rope or cable at a vertex, e.g. **80***b* and similarly, e.g., **82***b*, with the rope or cable attached, e.g., to an eyelet **18** on one of the dowels **18** forming part of the vertex, and looped through the other eyelet at the vertex, such that the tensionizing rope or cable exerts tension between each of the vertices, while the collapsible members **30***a, b, c, d* and *e,* or **32***a, b, c, d* and *e,* as applicable, are placed in compression. It will also be understood that the compactibility of the structure **10** of the present invention may be increased, and the height of the vertical walls formed by the sections **12***a, b, c, d* and *e* maintained by making the rigid members, e.g., **14***a, b* and *c,* themselves collapsible, e.g., by forming them of a two piece hinged construction as is known in the art for such supporting struts for collapsible structures and frames. In addition, the height of the vertical walls may be increased by adding a third or a fourth or more set of sections defined by another pair of adjacent lesser circle pentagons connected by rigid struts, e.g., in the triangular pattern as shown in FIGS. **1-3**. It will also be understood that the roof struts **22***a, b, c, d* and *e* must be joined at the apex **88** of the structure **10** shown in FIGS. **1-3**, which may be accomplished by simply as looping a rope through eyelets **18** at the terminal ends of the roof struts **22***a, b, c, d* and *e* meeting at the apex **88**, or by any of the well known mechanical structures for forming such a roof apex in collapsible structure frames known in the art. It will be understood, however, that the making of this vertex at the apex **88** of the structure will ordinarily need to be formed before vertical side walls of the structure **10** are rigidized and will ordinarily need to be broken down before the structure **10** is collapsed, since the length of the roof struts **22***a, b, c, d* and *e* will prevent the apex **88** from collapsing through the plane of the lesser circle formed by the top of the vertical wall, i.e., by collapsible sections **30***a, b, c, d* and *e,* as shown in FIGS. **1-3** while remaining joined in abutted ends at the apex **88**.

[**0042**] The collapsible support structure of the present invention provides a number of advantages beyond simply being collapsible and storable in a relatively compact form in a storage bag and being relatively easy to assemble and rigidize and collapse and store. No ropes or tie downs are needed to hold the erected structure having placed over it one of a number of forms of plastic, fabric or hybrid covers to form, e.g., a tent or other generally water tight enclosure. The ropes inside the collapsible frame structure of the present invention provide the hold down function simply by the weight of the cover over the structure, or alternatively, if, e.g., because of high winds, etc. weighted bags filled with, e.g., sand or water can be place over the bottom horizontal collapsible members. this can be especially beneficial on surfaces that are exceptionally hard, e.g., pure rock, or exceptionally soft, e.g., sand, where tie downs are difficult if not impossible to anchor. The structure is also adaptable to a large variety of terrains, including relatively steep slopes, and the ability to suspend hammocks from the upper vertices of the structure are not impacted by the structure being on such a slope. Furthermore if the structure, once assembled needs to be moved, e.g., having been initially erected over an ant hill, it can be lifted and moved fully assembled relatively easily due to its rigidity and light weight.

[**0043**] In use the collapsible support structure of the present invention can be a form of rapidly deployable emergency shelter. The ability to hang hammocks from the vertices of the frame enable use in wet conditions even if the frame does not support a covering forming a tent with an integral floor.

[**0044**] In operation the collapsible support structure of the present invention can be erected by the following process. The structure is first removed from the storage bag. The user can simply open the carrying bag and stand the collapsed structure in the verticle collapsed position. The five lower horizontal collapsible members will naturally fall away from the vertical poles, with the upper horizontal collapsible members remaining suspended from the upper ends of the vertical poles. the user can then spread tot lower horizontal collapsible support members to form the lower pent by moving the vertical poles outwardly from the stored compacted assembly. Leaving the upper collapsible horizontal support members in the broken down condition, the user can rigidize the lower horizontal collapsible members to form a rigidized pent at the bottom of the structure. With the apex of the roof poles connected by an apex ring as described above and the upper horizontal collapsible members remaining un-rigidized, and or un-tightened, the roof poles can be moved to above the horizontal plane of the upper horizontal collapsible members. The upper horizontal collapsible members can then be rigidized. Both the lower horizontal collapsible members and upper horizontal collapsible members can be rigidized by, e.g., threading the respective upper or lower flexible circumferential support member, e.g., rope or cable through an anchor ring at the opposite end of the cable or rope and held in place at one of the apexes/vertexes **80***a, b, c, d* and *e* or **82***a, b, c, d* and *e* and tightening the rope or cable by hand or with a mechanical tightener so that the respective horizontal lesser circle is in compression. This can be done, e.g., with the user standing inside of the frame under assembly and holding the roof poles upward to form a roof apex, while tightening the upper collapsible horizontal support members. The upper apexes will be generally centered over the centers of the lower collapsible support members and the upper collapsible structural members will be centered generally over the junctions between the bottom collapsible support structural members.

[**0045**] A further application of tie present invention to form a collapsible structure support can include other geodesic structures that are able to be formed and broken down according to the present invention, e.g., icosa, octa, tricon, etc., especially in multi-frequency large structures, e.g., using cables with somewhat heavier hardware.

[0046] The present invention has been described with respect to preferred embodiments. It will be understood by those skilled in the art that many variations and modification of the disclosed preferred embodiments may be made without changing or departing from the scope and spirit of the present invention, e.g., other forms of sleeves and tubes apart from those illustrated which maintain compression by the abutment of the inner tubes within the outer sleeve may be employed as known in the art, e.g., a sleeve with flouted ends and a more narrow central section such that the tubes coact with the narrowed center portion of the sleeve to create the compressive force. In addition, the sleeve itself could be the internal tubular structure, e.g., having a protrusion that slides along a slot in one or the other of the two tubes running the length of a collapsible member, e.g., **32***a,* so as to be able to be moved from a position in which the sleeve (now an internally disposed sleeve) slideably internally engages both of the other tubes to one in which it so engages only one of the other tubes, similarly to the configuration as shown in **FIG. 5**. Other such modifications may be made to the mechanical structural elements of the present invention, e.g., the dowels could be replaced with solid or hollow metal rods, or even generally flat struts, particularly if a hinged construction of the struts is desired, all of which may be made, e.g., of metal, e.g., made of aluminum, and/or the eyelets could be replaced with holes bored through the rigid structural members, whether such are wooden of metal, hollow or tubular or flat in construction. The poles/struts can also be made of a solid, e.g., metal or wooden dowel having hollow tubular sleeves at its terminal ends to accommodate connection, e.g., using the pop-in connectors described herein. The present invention, therefore, should not be limited to any preferred embodiments disclosed in this application and should be considered described and claimed only through the following claims:

We claim:

1. A collapsible support structure strut comprising:

a strut member;

a hollow tubular terminal end portion of the strut member having an inner surface;

a detatchable looped eyelet having at least one loop and a pair of extending legs, the legs being springedly biased to engage the tubular terminal end of the strut, thereby frictionally holding the looped eyelet in place at the terminal end of the strut.

2. The apparatus of claim 1 further comprising:

a holding plug having at least a portion thereof that is shaped and sized to frictionally engage the inner surface of the tubular terminal end of the strut to frictionally hold the holding plug in engagement with the strut;

a first and a second holding groove opposingly placed in the periphery of the holding plug and extending axially of the holding plug and adapted to either jamb a portion of a leg of the detachable looped eyelet against the inner surface of the tubular terminal end of the strut or to frictionally engage the leg of the detachable looped eyelet or to do both, to thereby improve the frictional holding of the eyelet in the tubular terminal end.

3. The apparatus of claim 1 further comprising:

the tubular terminal end of the strut having a pair of opposing holes in the tubular end, each positioned and sized to receive the respective protrusion from a respective leg portion of the detachable looped eyelet.

4. The apparatus of claim 2 further comprising:

the tubular terminal end of the strut having a pair of opposing holes in the tubular end, each positioned and sized to receive the respective protrusion from a respective leg portion of the detachable looped eyelet.

5. The apparatus of claim 1 further comprising:

the detachable looped eyelet has at least two loops.

6. The apparatus of claim 2 further comprising:

the detachable looped eyelet has at least two loops.

7. The apparatus of claim 3 further comprising:

the detachable looped eyelet has at least two loops.

8. The apparatus of claim 4 further comprising:

the detachable looped eyelet has at least two loops.

9. A collapsible support structure strut comprising:

a strut member;

a hollow tubular terminating means for providing an end portion of the strut member having an inner surface;

a detatchable eyelet means for retaining a flexible support member in proximity to the terminal end of the strut, having a means for engaging the terminal end of the strut for holding the detachable eyelet in place at the terminal end of the strut.

10. The apparatus of claim 9 further comprising:

holding plug means for enhancing the holding of the detachable eyelet means in place at the terminal end of the strut.

11. The apparatus of claim 9 further comprising:

the tubular terminal end of the strut having a locking means for preventing axial motion of the detachable eyelet means once the detachable eyelet means is in engagement with the locking means.

12. The apparatus of claim 10 further comprising:

the tubular terminal end of the strut having a locking means for preventing axial motion of the detachable eyelet means once the detachable eyelet means is in engagement with the locking means.

13. The apparatus of claim 9 further comprising:

the detachable eyelet means has at least two loops.

14. The apparatus of claim 10 further comprising:

the detachable eyelet means has at least two loops.

15. The apparatus of claim 11 further comprising:

the detachable eyelet means has at least two loops.

16. The apparatus of claim 12 further comprising:

the detachable eyelet means has at least two loops.

17. A method for providing detachable connection between a collapsible support structure strut at its terminal end and a flexible circumferential support member, comprising the steps of:

providing the struts with hollow tubular end portions having an inner surface and a side wall;

providing a detachable looped eyelet in detachable engagement with either the inside surface of the hollow tubular end portion or with at least one hole formed in the side wall of the hollow tubular end portion, or both.

18. The method of claim 17 further comprising the steps of:

providing an additional frictionally engaging member for frictionally engaging the interior surface of the hollow tubular end portion and either frictionally engaging the detachable looped eyelet, or jamming the detachable looped eyelet into engagement with the hollow tubular end portion, or both.

19. The method of claim 18 wherein the detachable looped eyelet has at lest two loops.

* * * * *