May 5, 1953 F. C. F. O. LUND 2,637,775

COUPLING OF A HELICAL CONDUCTOR TO A WAVE GUIDE

Filed March 16, 1948

Fig. 1.

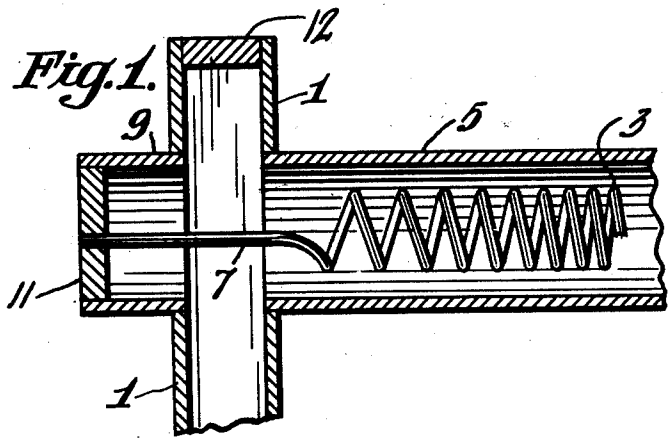

Fig. 2.

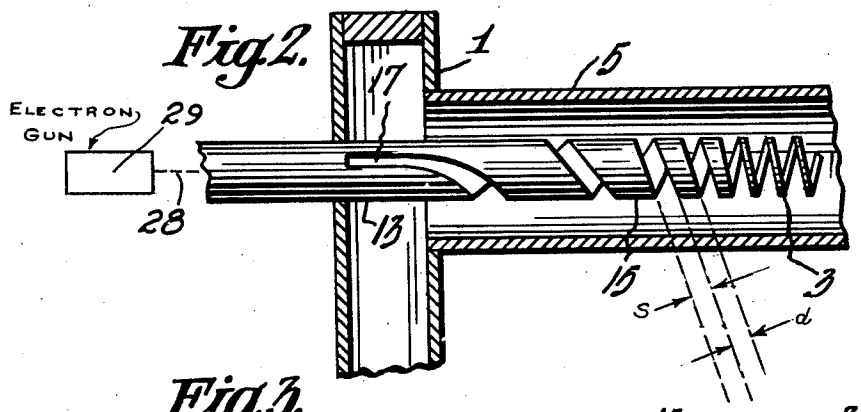

Fig. 3.

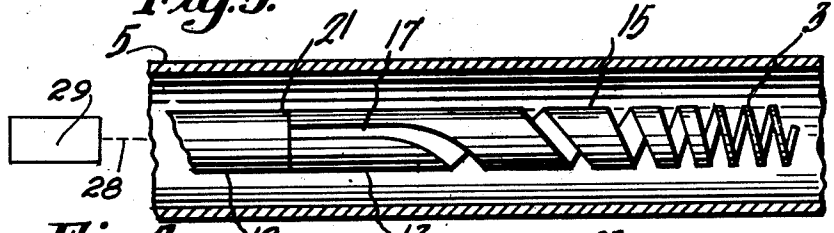

Fig. 4.

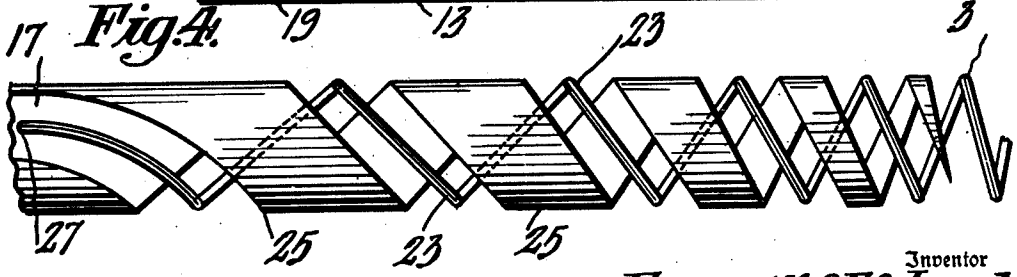

Inventor

Frederik C.F.O. Lund

By J. L. Whittaker

Attorney

Patented May 5, 1953 2,637,775

UNITED STATES PATENT OFFICE

2,637,775

COUPLING OF A HELICAL CONDUCTOR TO A WAVE GUIDE

Frederik C. F. O. Lund, Princeton, N. J., assignor to Radio Corporation of America, a corporation of Delaware

Application March 16, 1948, Serial No. 15,128

19 Claims. (Cl. 178—44)

1

This invention relates to radio frequency coupling devices, and its principal object is to provide improved methods and means for transferring high frequency energy between a helix and a wave guide or transmission line or the like.

More specifically, it is an object of the present invention to provide improvements in transition or transformer devices for transferring radio energy between a coaxial line or a wave guide and a helix with a minimum of reflection.

Another object of the invention is to provide transition devices of the described type which operate efficiently throughout relatively wide frequency bands.

A further object of this invention is to provide transition devices of substantially radially symmetrical structure, to produce minimum distortion of electric field patterns within the elements which are to be coupled.

The foregoing and other objects will become apparent upon consideration of the following description, with reference to the accompanying drawings, wherein:

Figure 1 is a sectional elevation of a wave guide coupled to a helix in accordance with prior art practice,

Figure 2 is a sectional elevation similar to Figure 1 but illustrating an embodiment of the present invention,

Figure 3 shows application of the transition device of the present invention to coupling a coaxial line to a helix, and

Figure 4 illustrates a modified transition device including separate primary and secondary conductors.

Transfer of radio energy between a helix and a wave guide or similar device is required in certain types of antenna systems, using helices as radiator or collector elements. Amplifiers of the so-called "travelling wave" type also include helices which act like electrically long but physically short transmission lines, and must be coupled to wave guides or other enclosed transmission means.

Referring to Figure 1, a wave guide 1 is to be coupled to a helix 3. Only the portion of the helix 3 in the neighborhood of the wave guide is shown in Figure 1. The helix may extend to the right of Figure 1 to any required length, and may be surrounded by a conductive sheath 5, either throughout its entire length, or only about the portion near the wave guide 1, depending upon the purpose for which it is to be used.

The pitch of the helix 3 is gradually increased in the direction approaching the wave guide, becoming substantially infinite in the region 7 where the conductor goes through the guide. The approximately straight wire, which constitutes the infinite pitch portion 7 of the helix, acts as a probe or a small antenna.

2

Since the effective characteristic impedance of the wave guide may be relatively low compared to the radiation resistance of the conductor 7, some kind of impedance matching device is necessary to effect any substantial transfer of energy. This may be provided by extending the conductor 7 about one quarter wavelength beyond the wall of the wave guide 1, inside a sheath 9 closed by a shorting plug 11. The end of the conductor 7 is connected to the plug 11. The wave guide 1 is closed by a conductive plug 12, at a point about one quarter wavelength from the conductor 7. In practice, both plugs 11 and 12 are adjustable in position.

The sheath 9, plug 11, and end portion of the conductor 7 form a short circuited coaxial line section, slightly less than one quarter wavelength long to act as an inductance. The end of the wave guide 1 which is closed by the plug 12 is slightly greater than one quarter wavelength long, and acts as a capacitance in parallel with the inductance of the coaxial line section and the inductance of the conductor 7. The plugs 11 and 12 are adjusted to make the inductive and capacitive reactances equal and of such value that substantial impedance match is obtained. The structure of Figure 1 operates efficiently, at the single frequency for which it is designed, to transfer energy between the guide 1 and the helix 3. At any other frequency, the matching sections are not the correct lengths and therefore a relatively low impedance is presented to the end of the helix. The impedance of the conductor 7 is no longer matched to that of the guide 1, and reflections occur, preventing efficient operation.

Another objectionable feature of the prior art structure of Figure 1 is that the conductor 7 is necessarily asymmetrical with respect to the axis of the helix 3. This causes no great difficulty when the only requirement is that of coupling between the wave guide and the helix. However, in certain applications, as for example in travelling wave tubes, a stream of electrons is directed along the axis of the helix. The off-center conductor 7 produces a distorted field which deflects the electron stream away from the axis.

The structure shown in Figure 2 minimizes both of the foregoing disadvantages, by using a coupling probe in the form of a relatively large

diameter cylindrical tube 13 rather than a small wire.

The transition from the helix 3 to the cylinder 13 is effected by a helical section 15 comprising a conductor which increases in width as the pitch is increased, so that approximately constant spacing is maintained between successive turns. Another way of describing this portion of helix 3 is that the width of the helix defined as the dimension d (which is the width of the solid portions measured between interturn spaces at right angles to the helix angle) increases between successive turns from right to left as viewed in Fig. 2. The interturn spaces, measured substantially at right angles to the helix angle, as illustrated by the distances designated s in Fig. 2, remains substantially constant. The pitch approaches infinity as the conductor enters the wave guide 1. At this point, the conductor forms the hollow cylinder or tube 13, with a longitudinal slot 17. The coaxial line impedance matching stub may be omitted, and the cylinder 13 connected to the wall of the wave guide 1, as shown.

In the operation of the structure of Figure 2, the cylinder 13 acts like a small antenna or a probe to radiate or pick up an electric field in the wave guide 11. The transition section 15 serves to match the characteristic impedance of the helix 3 to the radiation resistance of the cylinder 13. The relatively large diameter of the cylinder 13 causes it to have a comparatively low radiation resistance and low inductance, unlike the high resistance presented by the wire 7 in Figure 1. This enables a reasonably good impedance match to be maintained throughout a relatively wide frequency band because little or no reactant compensation is required. The slot 17 is relatively narrow and has substantially no difference in potential between corresponding points on its two sides. As a practical matter, the slot 17 may be closed entirely in the part of the structure within the wave guide 1, so that the periphery of the cylinder is complete. Consequently, an electron beam 29 projected as by electron gun 29 along the axis of the structure finds its surroundings electrically symmetrical and is not appreciably deflected from its course by the presence of the coupling means.

Various modifications of the described structure may be made. For example, the cross-section of the conductor of the transition section 15 may be oval or round or rectangular. The diameter of the cylinder 13 may be made either greater or less than that of the helix 3 by properly shaping the tapered conductor. The spacing between adjacent turns of the transition section 15 need not be constant but may increase in the direction of the cylinder 13. Referring to Figure 3, substantially the same transition section as that shown in Figure 2 may be used to couple a coaxial line to a helix. In this case, it is assumed that the outer conductor of the coaxial line is merely an extension of the sheath 5 surrounding the helix 3, and the inner conductor 19 is of the same diameter as the cylindrical element 13. The slot 17 is short-circuited by the line conductor 19 at the junction 21. In the operation of the structure of Figure 3, the transition section 15 acts as a transformer to match the characteristic impedance of the line 5, 19 to that of the helix 3.

Figure 4 shows a modification of the transition section 15 including a secondary helix 23 formed by a conductor lying in the spaces between turns of a primary helix 25. The helix 25 comprises a conductor of varying width, similar to the transition section 15 of Figures 2 and 3. The secondary helix may be of constant width and is merely an extension of the helix 3. The secondary conductor may terminate at a point 27 within the slot 17 formed by the primary helix 25. The operation of the device of Figure 4 is similar to that of the transition section shown in Figures 2 and 3, except that no conductive coupling between the helix and the coupling structure is required.

The invention has been described as an improvement in coupling devices for the transfer of energy between a helix and a wave guide or transmission line, including a transition section comprising a helical structure of variable pitch formed of a conductor having correspondingly variable width terminating in a cylinder. The term "cylinder" as used herein and in the appended claims is intended to mean the surface generated by a line parallel and moving in a path, not necessarily circular, about a directrix, and thus includes shapes of oval, rectangular, and other cross sections. The described structure has the advantage of providing efficient coupling throughout a relatively wide band of frequencies, and minimizes distortion of the electric field at the coupling end of the helix.

I claim as my invention:

1. In a radio frequency system including a helix and transmission means such as a coaxial line or a waveguide including an enclosure through which radio energy is transmitted, a device for transferring energy between said helix and said transmission means, including a body of metallic material comprising a tubular portion near one end of said helix with its axis coincident with an extension of the axis of said helix, and a metallic transition section connected between said helix and said tubular portion, said transition section comprising a generally helical portion which increases smoothly in pitch from that of said helix to infinity at said tubular portion and the solid portion of which increases smoothly in width from that of said helix to merge substantially into the perimeter of said tubular portion.

2. In a radio frequency system including a helix and transmission means such as a coaxial line or a waveguide including an enclosure through which radio energy is transmitted, a device for transferring energy between said helix and said transmission means, including a body of metallic material comprising a tube near one end of said helix with its axis coincident with an extension of the axis of said helix and having solid walls, and a transition section coupled to said helix and connected to said tube, said transition section comprising a generally helical metallic conductor which increases smoothly in pitch from that of said helix to infinity at said tube and increases smoothly in width from that of the solid portion of said helix to merge substantially into the solid walls of said tube.

3. The invention as set forth in claim 2, wherein said transition section is coupled to said helix by a helical conductor lying between and insulatingly spaced from the turns of said transition section and connected to said helix as a continuation thereof.

4. In a radio frequency system including a helix and transmission means such as a coaxial line or a waveguide including an enclosure through which radio energy is transmitted, a device for transferring energy between said helix

and said transmission means, including a body of metallic material comprising a tube near one end of said helix with its axis coincident with an extension of the axis of said helix, and a transition section connected between said helix and said tube, said transition section comprising a generally helical metallic member which increases smoothly in pitch from that of said helix to infinity at said cylinder and increases in the width of its solid portion from that of said helix to merge substantially into that of said tube, with the spacing between adjacent turns of said transition section constant and substantially the same as the spacing between adjacent turns of said helix.

5. In a radio frequency system including a helix of substantially uniform pitch and transmission means such as a coaxial line or a waveguide including an enclosure through which radio energy is transmitted, a device for transferring energy between said helix and said transmission means, including a body of metallic material comprising a tube near one end of said helix with its axis co-incident with an extension of the axis of said helix, said tube being of substantially the same diameter as said helix, and a transition section connected between said helix and said tube, said transition section comprising a generally helical metallic member which increases smoothly in pitch from that of said helix to a relatively large value at said tube and the solid portion of which increases smoothly in width from that of said helix to merge substantially into that of said tube.

6. A transformer device for radio frequency systems comprising a helix which increases in pitch from a predetermined value at a first end to substantially infinity at the second end, said helix comprising a metallic body which increases from a relatively small width at said first end to a greater width at said second end, whereby said second end merges substantially into a slotted tube having its axis aligned with the axis of said helix.

7. A device for coupling a coaxial line to a traveling wave vacuum tube helix, comprising a transition section in the form of a metallic helix which increases in pitch from a predetermined value at a first end to substantially infinity at the second end, said helix comprising a metallic body which increases from a relatively small width at said first end to a larger width and substantially merging into a slotted metallic tube at said second end the slot in which terminates at said second end, whereby a portion of said second end merges substantially into a solid walled metallic tube, means connecting said solid walled metallic tube to the inner conductor of said coaxial lines, and means coupling said helical transition section to said first mentioned helix.

8. A transformer device for radio frequency systems comprising a helix which increases in pitch from a predetermined value at a first end to a larger value at the second end, said helix comprising a metallic body which increases smoothly from a relatively small width at said first end to a larger width and substantially merging into a tube of radius equal to that of said helix at said second end, whereby the spacing between adjacent turns of said helix is constant and said second end is substantially a slotted metallic tube.

9. A transformer device for radio frequency systems comprising a travelling wave vacuum tube helix which increases in pitch from a predetermined value at a first end to a larger value at the second end, said helix comprising a metallic body which increases similarly from a relatively small width at said first end to a width substantially equal to the perimeter of said helix at said second end, whereby the spacing between adjacent turns of said helix is approximately constant and said second end merges substantially into a cylindrical tube.

10. A transformer device for radio frequency systems including a helix which increases in pitch from a predetermined value at a first end to substantially infinity at the second end, said helix comprising a metallic body which increases from a relatively small width at said first end to a width substantially equal to the perimeter of said helix at said second end, whereby said second end merges substantially into a tube, and a second helix interwound bifilarly with said first mentioned helix and comprising a second metallic body of substantially uniform width spaced insulatingly from said first body.

11. A high frequency system comprising a metallic member, means for projecting through said member the beam of electrons in a travelling wave tube and comprising portions merging successively and smoothly into each other in the order stated, said portions being a tubular portion, a tubular portion with a longitudinal slot, a helical portion with said slot extended into the space between turns and decreasing in pitch, and a helical portion having constant pitch and width.

12. The system claimed in claim 11, said portions being positioned with the axes thereof lying on the same straight line.

13. The members claimed in claim 11, said portions having a substantially constant radius.

14. The combination comprising a travelling wave tube helix through which a beam of electrons is axially projected, a metallic tubular member, and a transition section between said helix and said member comprising an extension of the helix in a continuous spiral having a width increasing with approach to said tubular portion and merging into said tubular portion with a portion of like size and shape having a longitudinal slot, said helix, tubular member and transition section having a continuous axis.

15. A structure for use in a travelling wave tube having a beam of electrons projected along an axis, said structure comprising a metallic member having a closed tubular portion merging into a longitudinally slotted portion which in turn merges into a helical portion with the slot merging simultaneously into the spaces between the turns of the helical portion, the said helical portion decreasing in pitch and merging into a helix of constant pitch, a tubular sheath surrounding the metallic member and having walls through which the tubular portion merges in contact therewith, said member being insulatingly spaced from said sheath in the other portions thereof and having its axis coincident with that of the electron beam, and a waveguide communicating with said sheath near said tubular portion.

16. In a travelling wave tube having means for producing a beam of electrons. a metallic sheath, a waveguide communicating therewith, a metallic member through which said beam is to be projected, said member being tubular and having one end with a solid side-wall portion extending into a portion with a longitudinal slot beginning substantially at the point of communication of said sheath and said waveguide and said

slot extending toward the other end of said member in a helical spiral having decreasing pitch, said sheath surrounding and insulatingly spaced from said member.

17. A metallic member, means for projecting therethrough the beam of electrons in a travelling wave tube, said member being tubular and having a helical slot increasing in pitch from one end to the other to become a longitudinal slot terminating at said other end with said other end being a tubular portion with a solid wall.

18. A structure for a radio frequency energy transition section comprising metallic portions which are helical and longitudinally slotted tubular, said portions smoothly and gradually merging one into the other in the order named, and each having a central axis the continuation of that of the other.

19. A coupling device for the transfer of high frequency energy between a coaxial transmission line and a helix, comprising a tubular conductor connected to and forming an extension from the

end of one of the conductors of said line, said tubular conductor including a helical slot which varies continuously in pitch from substantially infinity at said end of said coaxial line conductor to substantially that of said helix at the other end of said tubular conductor, wherein the width of said slot is substantially uniform and approximately equal to the spacing between the turns in said helix.

FREDERIK C. F. O. LUND.

References Cited in the file of this patent

UNITED STATES PATENTS

Number	Name	Date
1,816,448	Terman	July 28, 1931
2,124,212	Rust	July 19, 1938
2,139,055	Wright	Dec. 6, 1938
2,142,138	Llewellyn	Jan. 3, 1939
2,300,052	Lindenblad	Oct. 27, 1942
2,524,857	Secker	Oct. 10, 1950