(12) INTERNATIONAL APPLICATION PUBLISHED UNDER THE PATENT COOPERATION TREATY (PCT)

(19) World Intellectual Property Organization
International Bureau

(43) International Publication Date
2 May 2013 (02.05.2013)

WIPO | PCT

(10) International Publication Number
WO 2013/062895 A1

(51) International Patent Classification:
F16B 23/00 (2006.01) *B25B 15/00* (2006.01)

(21) International Application Number:
PCT/US2012/061280

(22) International Filing Date:
22 October 2012 (22.10.2012)

(25) Filing Language: English

(26) Publication Language: English

(30) Priority Data:
2011904446 26 October 2011 (26.10.2011) AU

(71) Applicant: **ILLINOIS TOOL WORKS INC.** [US/US]; 3600 West Lake Avenue, Glenview, Illinois 60026 (US).

(72) Inventors: **D'SILVA, Brian P.**; 430 Burwood Highway, Vermont South, Victoria 3133 (AU). **MALLET, John**; 26 Bruce Crescent, Ferntree Gully, Victoria 3156 (AU).

(74) Agent: **HAUPTMAN, Benjamin J.**; LOWE HAUPTMAN HAM & BERNER, LLP, 1700 Diagonal Road, Suite 300, Alexandria, Virginia 22314 (US).

(81) Designated States *(unless otherwise indicated, for every kind of national protection available)*: AE, AG, AL, AM, AO, AT, AU, AZ, BA, BB, BG, BH, BN, BR, BW, BY, BZ, CA, CH, CL, CN, CO, CR, CU, CZ, DE, DK, DM, DO, DZ, EC, EE, EG, ES, FI, GB, GD, GE, GH, GM, GT, HN, HR, HU, ID, IL, IN, IS, JP, KE, KG, KM, KN, KP, KR, KZ, LA, LC, LK, LR, LS, LT, LU, LY, MA, MD, ME, MG, MK, MN, MW, MX, MY, MZ, NA, NG, NI, NO, NZ, OM, PA, PE, PG, PH, PL, PT, QA, RO, RS, RU, RW, SC, SD, SE, SG, SK, SL, SM, ST, SV, SY, TH, TJ, TM, TN, TR, TT, TZ, UA, UG, US, UZ, VC, VN, ZA, ZM, ZW.

(84) Designated States *(unless otherwise indicated, for every kind of regional protection available)*: ARIPO (BW, GH, GM, KE, LR, LS, MW, MZ, NA, RW, SD, SL, SZ, TZ, UG, ZM, ZW), Eurasian (AM, AZ, BY, KG, KZ, RU, TJ, TM), European (AL, AT, BE, BG, CH, CY, CZ, DE, DK,

[Continued on next page]

(54) Title: SCREW FASTENER

(57) Abstract: A screw having a driving head (2) of polygonal form, hexagonal for ex¬ ample, the head being tapered so as to mate with a wedging fit with a drive socket of corresponding form to prevent wobble of the screw during application.

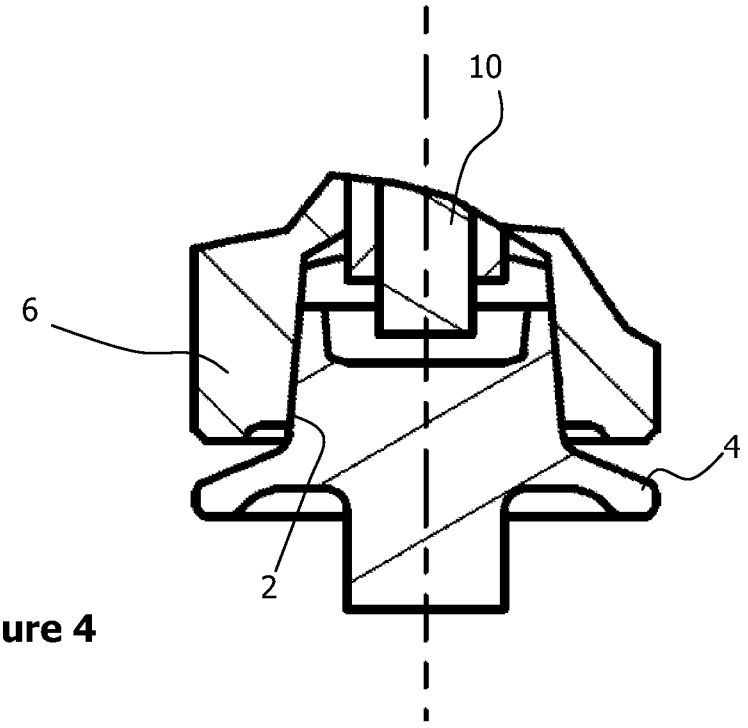

Figure 4

WO 2013/062895 A1

EE, ES, FI, FR, GB, GR, HR, HU, IE, IS, IT, LT, LU, LV, MC, MK, MT, NL, NO, PL, PT, RO, RS, SE, SI, SK, SM, TR), OAPI (BF, BJ, CF, CG, CI, CM, GA, GN, GQ, GW, ML, MR, NE, SN, TD, TG).

Published:

— *with international search report (Art. 21(3))*

SCREW FASTENER

BACKGROUND OF THE INVENTION

1. Field of the Invention

The present invention relates to screw fasteners and more particularly to screws for use in building construction such as for fixing composite panels, roofing sheets and cladding.

2. Description of the Prior Art

Screws for fixing panels, roofing sheets, and cladding in building construction are typically self-drilling screws having with a hexagonal drive head with integral washer. The screw is driven by engagement within a hexagonal socket of a power tool. While screws having a shank length of about 95mm or less are relatively easy to drive, as the shank length increases above 95mm, as may arise when the shank has to traverse thick insulation or a thermal break, the screw becomes increasingly difficult to install as the screw becomes less stable and tends to wobble. While the wobbling effect can be mitigated by the operator holding the shank of the screw in one hand, this leads to friction and heating and can cause substantial discomfort to the operator. Another effect arising from the combination of wobble and the length of the screw is the tendency for the head of the screw to break out of the drive socket when end load is applied and which is necessary to install the screw. In order to overcome the problem arising from wobbling of longer length screws, applicators are available which hold the screw shank but these tend to be quite expensive, heavy and not easy to use.

SUMMARY OF THE INVENTION

The present invention relates to a design of screw head and associated drive socket which provides a locking interface between the two to prevent wobble.

According to one aspect of the present invention there is provided a screw having a driving head of polygonal form, the head being tapered so as to mate with a wedging fit with a drive socket of corresponding form.

The present invention also provides a drive socket of tapered internal configuration for

engagement with a wedging fit with the head of a screw as specified above.

In a preferred embodiment, the head is of hexagonal form and the screw is a self-drilling screw.

BRIEF DESCRIPTION OF THE DRAWINGS

An embodiment of the invention will now be described by way of example only with reference to the accompanying drawings in which:

Figure 1 is a side view of the head end of a screw in accordance with the preferred embodiment, the shank and remainder of the screw being omitted from that figure;

Figure 2 is an end view corresponding to Figure 1;

Figure 3 is a side view in section showing a drive bit engaged with the head of the screw; and

Figure 4 is an enlarged detail showing a wedging engagement between a socket of the drive bit and the head of the screw.

DESCRIPTION OF THE PREFERRED EMBODIMENT

A screw in accordance with the preferred embodiment of the invention has a hexagonal drive head 2 and integral washer 4. In contrast to conventional drive heads of this form, the hexagonal head is tapered towards its outer end. The taper angle is not required to be particularly large, a taper angle of only a few degrees per face, such as 5° equivalent to an included angle α of 10°, being sufficient. However a wedge fit could be provided with a taper angle of as little as 3° or as high as 25° although taper angles towards the lower end of that range are considered to provide the better wedging effect, particularly an angle of about 5° and a little above that, specifically up to about 8°. The head 2 is designed for use with a drive socket 6 of correspondingly tapered form of a drive bit 8, whereby when the socket 6 is engaged over the head there will be a tight locking fit between the head and the socket, effectively a wedging fit as is clearly shown in Figure 4. As a consequence, in the condition of driving engagement between the socket 6 and head 2 there is no clearance between the two and wobble between the socket and head is eliminated. In contrast, in a conventional hexagonal head with parallel sides there is necessarily a clearance between the socket and the head and it is that clearance which gives rise to the potential for wobble

between the two; that clearance cannot be eliminated due to the need for the socket to fit the socket easily over the head, and due to manufacturing tolerances that clearance cannot be reduced to any practical extent.

In the embodiment shown the socket 6 includes a magnetic pin 10 to retain the screw head 2, although that is not essential as the wedging fit between the screw head will itself provide a retention effect.

The remainder of the design of the screw in terms of its shank, thread, and tip is substantially conventional and where the screw is a self-drilling screw, the tip will include a drilling portion of conventional form. Although the primary utility of the preferred embodiment is in relation to self-drilling screws, it is to be understood that the invention is applicable also to screws without that capability.

While the primary utility of the invention is in relation to screws having a length of greater than 95mm as it is with screws of that length where the major wobble problems arise, nevertheless it could also be used with screws of shorter length.

Although in the preferred embodiment the drive head is of hexagonal form it could alternatively be of other polygonal shape having a series of angularly spaced driving faces which are tapered, in other words inclined, relative to the longitudinal axis of the screw for co-operation with a drive socket of corresponding form.

The embodiment has been described by way of example only and modifications are possible within the scope of the invention.

CLAIMS

1. A screw having a driving head of polygonal form, the head being tapered so as to mate with a wedging fit with a drive socket of corresponding form.

2. A screw according to claim 1, wherein the head has a series of angularly spaced driving faces each inclined relative to the axis of the screw head by an angle of from 3° to 25°.

3. A screw according to claim 2, wherein the angle of inclination of each face to the axis of the screw head is from about 5° to 8°.

4. A screw according to claim 2, wherein the angle of inclination of each face to the axis of the screw head is about 5°.

5. A screw according to claim 1, wherein the head has a series of angularly spaced driving faces inclined relative to the axis of the screw head by a few degrees sufficient to provide the wedging fit with the drive socket of corresponding form.

6. A screw according to any one of claims 1 to 5, wherein the head is of hexagonal form.

7. A screw according to any one of claims 1 to 6 having a shank length of about 95mm or more.

8. A screw according to any one of claims 1 to 7 having a washer integral with the head.

9. A drive socket of tapered internal configuration for engagement with a wedging fit with the head of a screw according to any one of claims 1 to 8.

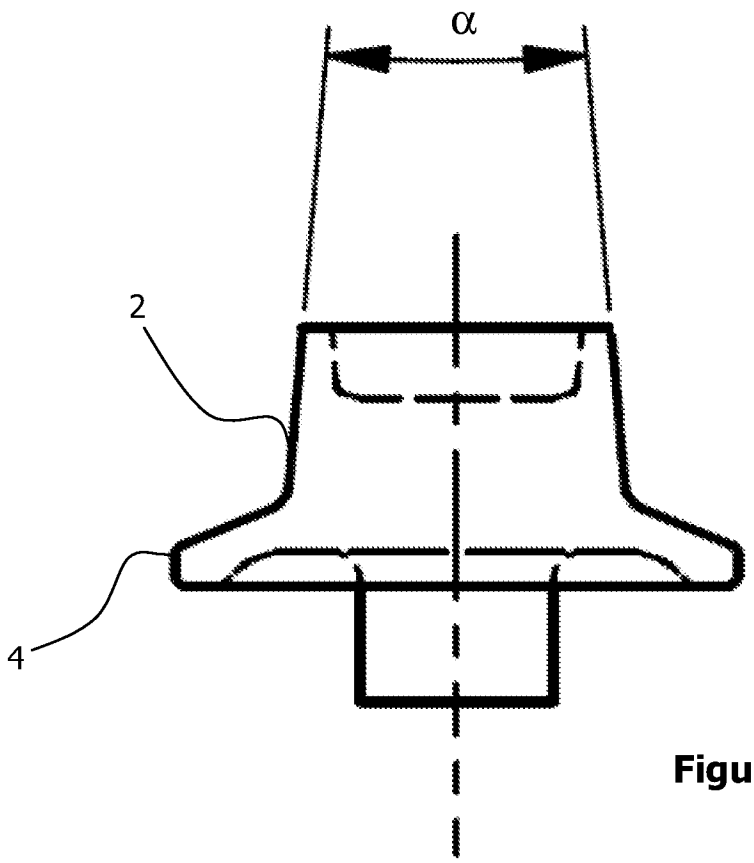

Figure 1

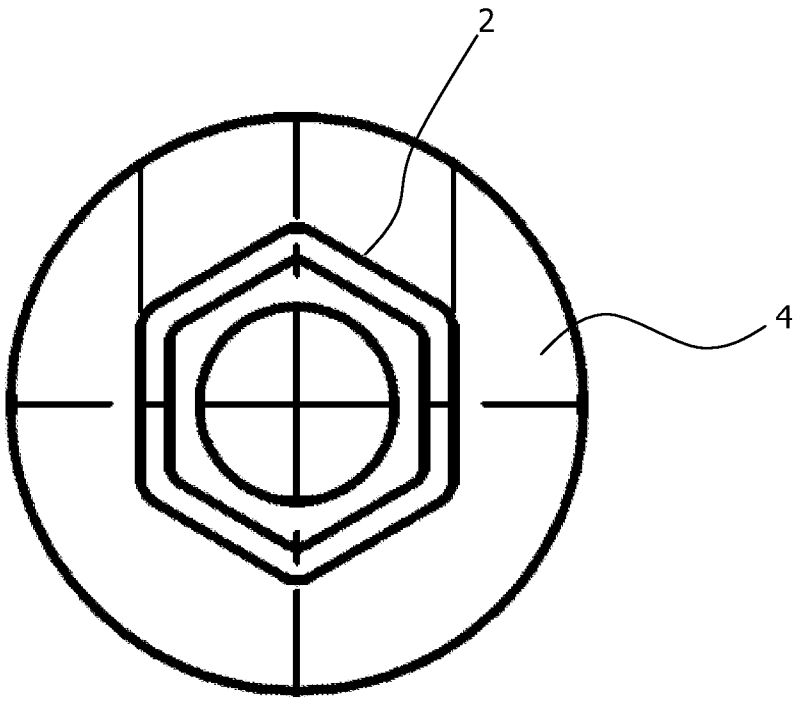

Figure 2

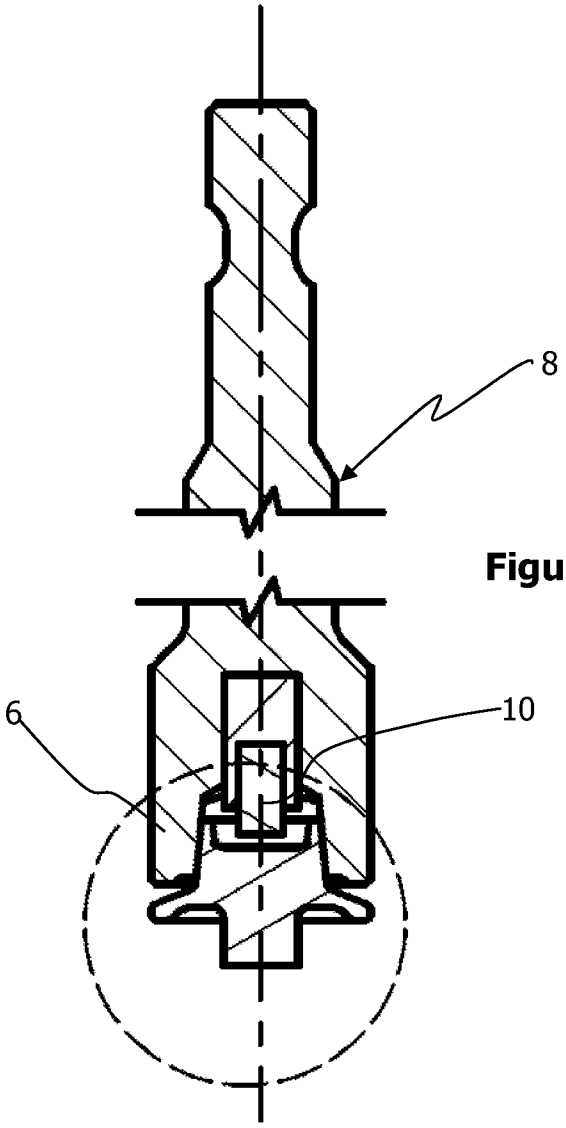

Figure 3

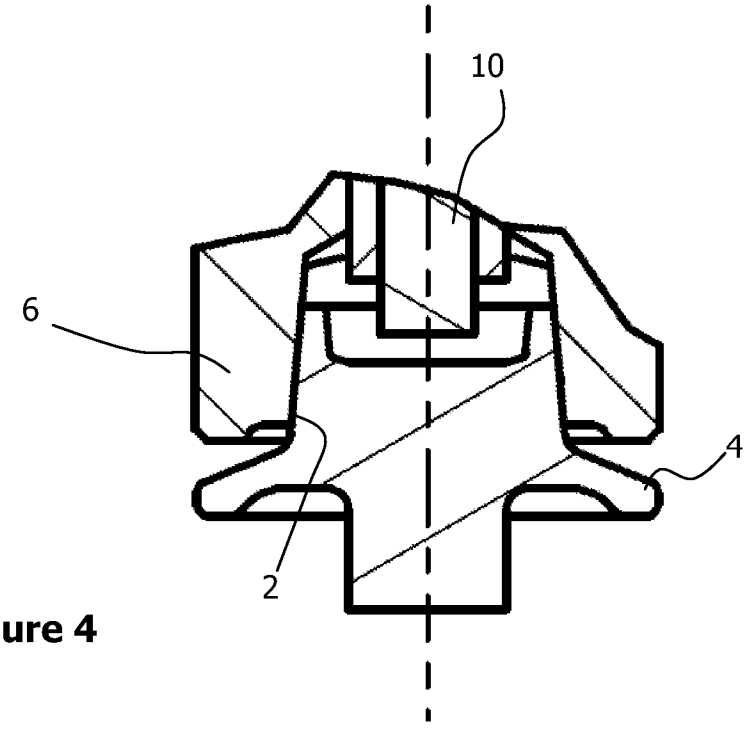

Figure 4

INTERNATIONAL SEARCH REPORT

International application No
PCT/US2012/061280

A. CLASSIFICATION OF SUBJECT MATTER
INV. F16B23/00 B25B15/00
ADD.

According to International Patent Classification (IPC) or to both national classification and IPC

B. FIELDS SEARCHED

Minimum documentation searched (classification system followed by classification symbols)
F16B B25B

Documentation searched other than minimum documentation to the extent that such documents are included in the fields searched

Electronic data base consulted during the international search (name of data base and, where practicable, search terms used)
EPO-Internal, WPI Data

C. DOCUMENTS CONSIDERED TO BE RELEVANT

Category*	Citation of document, with indication, where appropriate, of the relevant passages	Relevant to claim No.
X	US 6 045 311 A (CHANG PETER JENN-HAI [TW]) 4 April 2000 (2000-04-04) claims 1,3; figures 1,8	1-9
X	AT 388 215 B (SFS STADLER AG [CH]) 26 May 1989 (1989-05-26) abstract; figures 1-6,9-12	1
X	EP 2 363 245 A2 (PHILLIPS SCREW CO [US]) 7 September 2011 (2011-09-07) abstract; figures 18-21	1
X	FR 2 204 242 A5 (MARTIN GEORGES [FR]) 17 May 1974 (1974-05-17) figures	1

-/--

[X] Further documents are listed in the continuation of Box C.

[X] See patent family annex.

* Special categories of cited documents :

"A" document defining the general state of the art which is not considered to be of particular relevance

"E" earlier application or patent but published on or after the international filing date

"L" document which may throw doubts on priority claim(s) or which is cited to establish the publication date of another citation or other special reason (as specified)

"O" document referring to an oral disclosure, use, exhibition or other means

"P" document published prior to the international filing date but later than the priority date claimed

"T" later document published after the international filing date or priority date and not in conflict with the application but cited to understand the principle or theory underlying the invention

"X" document of particular relevance; the claimed invention cannot be considered novel or cannot be considered to involve an inventive step when the document is taken alone

"Y" document of particular relevance; the claimed invention cannot be considered to involve an inventive step when the document is combined with one or more other such documents, such combination being obvious to a person skilled in the art

"&" document member of the same patent family

Date of the actual completion of the international search	Date of mailing of the international search report
14 January 2013	23/01/2013

Name and mailing address of the ISA/	Authorized officer
European Patent Office, P.B. 5818 Patentlaan 2 NL - 2280 HV Rijswijk Tel. (+31-70) 340-2040, Fax: (+31-70) 340-3016	Pöll, Andreas

INTERNATIONAL SEARCH REPORT

International application No
PCT/US2012/061280

C(Continuation). DOCUMENTS CONSIDERED TO BE RELEVANT

Category*	Citation of document, with indication, where appropriate, of the relevant passages	Relevant to claim No.
X	US 755 804 A (SMITH GEORGE CROCKER [AU]) 29 March 1904 (1904-03-29) page 1, lines 80-86; figures	1
A	US 5 277 531 A (KRIVEC BERT [US]) 11 January 1994 (1994-01-11) column 5, lines 17-21; figures	2-4
A	DE 20 2009 008804 U1 (FLAIG HARTMUT [DE]) 8 July 2010 (2010-07-08) claim 6; figures	2-4

INTERNATIONAL SEARCH REPORT

Information on patent family members

International application No
PCT/US2012/061280

Patent document cited in search report	Publication date	Patent family member(s)	Publication date
US 6045311 A	04-04-2000	AU 729621 B3	08-02-2001
		AU 9060598 A	03-04-2000
		BR 9813978 A	26-09-2000
		CA 2309644 A1	23-03-2000
		CN 1275186 A	29-11-2000
		DE 29880159 U1	26-04-2001
		EP 1031740 A1	30-08-2000
		US 6045311 A	04-04-2000
		WO 0015966 A1	23-03-2000
AT 388215 B	26-05-1989	NONE	
EP 2363245 A2	07-09-2011	AU 2010347215 A1	21-06-2012
		CA 2785632 A1	09-09-2011
		CN 102791432 A	21-11-2012
		EP 2363245 A2	07-09-2011
		TW 201135082 A	16-10-2011
		US 2011217143 A1	08-09-2011
		WO 2011109040 A1	09-09-2011
FR 2204242 A5	17-05-1974	NONE	
US 755804 A	29-03-1904	NONE	
US 5277531 A	11-01-1994	NONE	
DE 202009008804 U1	08-07-2010	DE 102009007945 A1	19-08-2010
		DE 202009008804 U1	08-07-2010
		EA 201171007 A1	30-03-2012
		EP 2394062 A1	14-12-2011
		WO 2010089028 A1	12-08-2010