May 8, 1928. 1,668,999

A. FALLOT

OFFSET PRINTING MACHINE

Filed Feb. 1. 1924 2 Sheets-Sheet 1

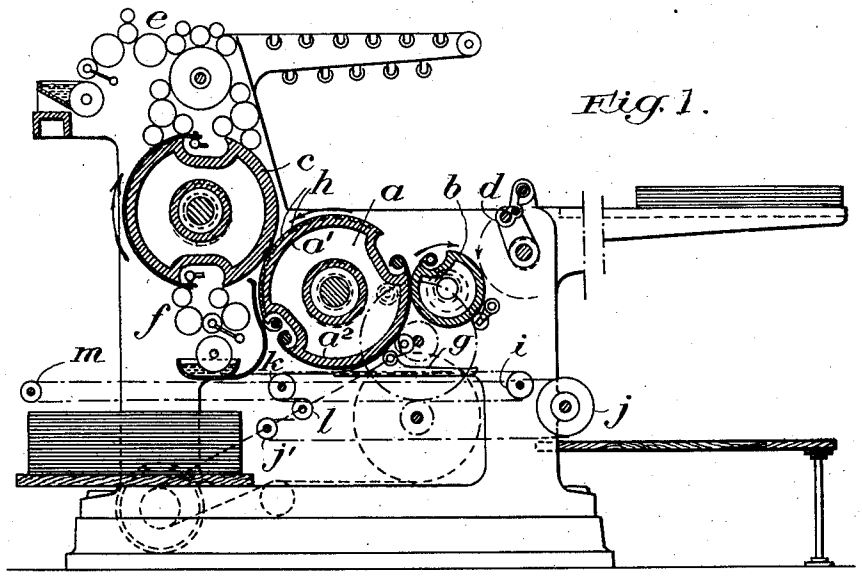

Fig. 1.

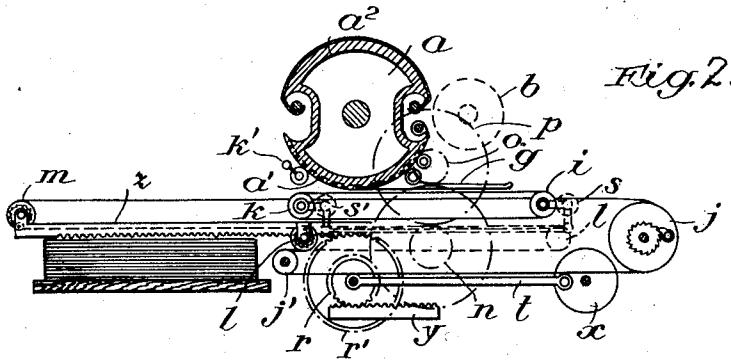

Fig. 2.

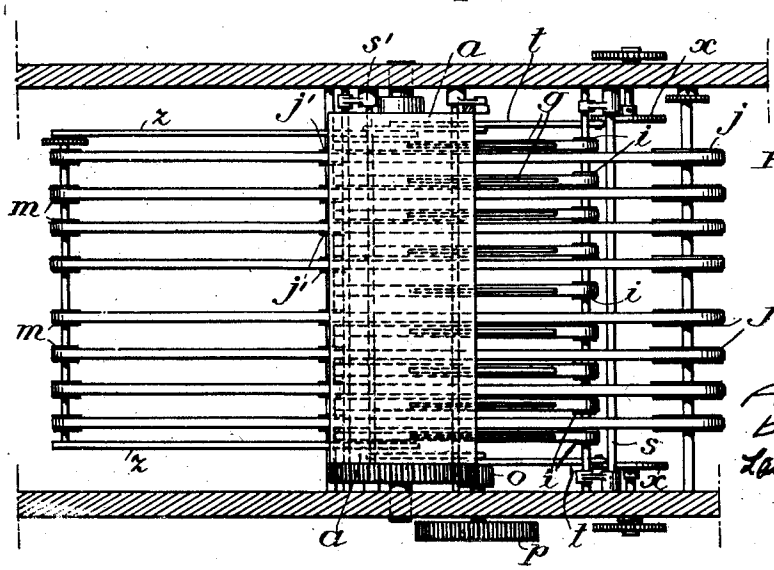

Fig. 3.

Inventor:
A. Fallot
by
Langner, Parry, Card & Langner
Attys.

May 8, 1928. 1,668,999

A. FALLOT

OFFSET PRINTING MACHINE

Filed Feb. 1. 1924 2 Sheets-Sheet 2

Fig. 2a.

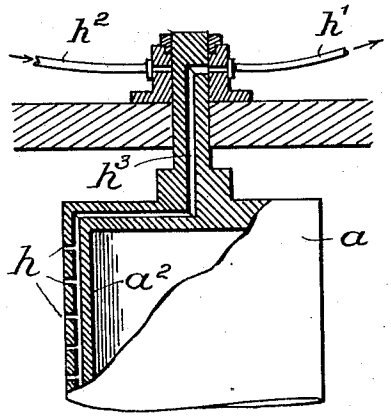

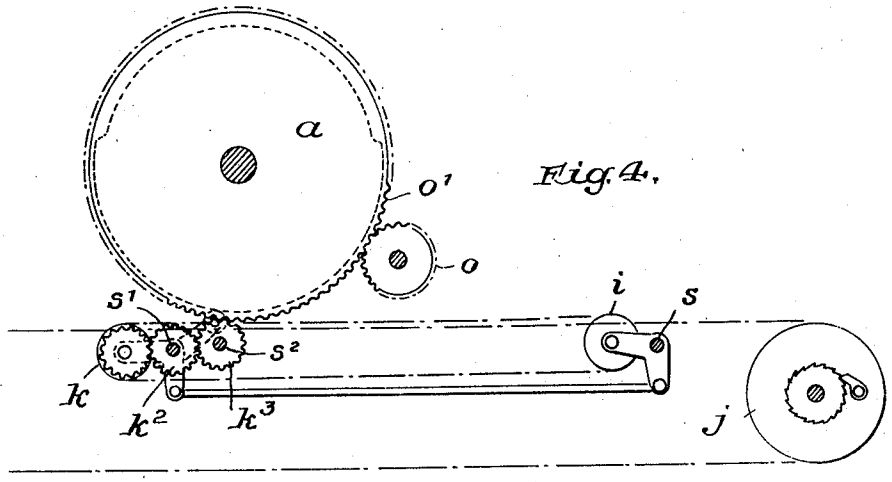

Fig. 4.

Inventor:
A. Fallot
By,
Langner, Parry, Card & Langner
Attys

Patented May 8, 1928. 1,668,999

UNITED STATES PATENT OFFICE.

ALFRED FALLOT, OF PLAUEN, GERMANY; HARRY PRIESTER EXECUTOR OF SAID ALFRED FALLOT, DECEASED.

OFFSET PRINTING MACHINE.

Application filed February 1, 1924, Serial No. 690,030, and in Germany February 14, 1923.

This invention relates to improvements in three cylinder off-set printing machines in which the off-set cylinder is provided with a blanket on one half in the ordinary way whilst the other half of the circumference acts as a transporting surface to deliver the sheet printed side up to the delivery tapes. In the present machines of this type the direction of rotation of the plate and off-set cylinders is such that the inked plate cylinder surface, before it contacts with the off-set surface or blanket is only visible and accessible on the side of the machine remote from the operator who is stationed at the feeding side of the machine. This organization and arrangement of the machine parts prevents the operator from inspecting the plate and if necessary wiping it by hand before the transfer or inking operation onto the off-set surface.

According to this invention the off-set and plate cylinders, preferably both of the same diameter, rotate in such a direction that the inked plate passes in view of the operator at the front or feeding end of the machine in moving from the inking rollers to the point where is transfers or inks on to the off-set blanket, whilst the sheets are fed by an auxiliary feeding arm to the front side of the impression cylinder. By this arrangement the sheet is printed when moving upwardly instead of downwardly. By making the plate cylinder of the same diameter as the combined off-set and delivering cylinder, more space is provided for inspection and hand wiping of the plate.

The sheets are delivered, printed side up, to the tapes arranged in a manner which is selected as best suited for the three cylinder off-set printing machine reorganized as above described and for the purpose set forth.

In the drawings Figure 1 shows a three cylinder off-set printing machine according to this invention in side elevation.

Figure 2 is a side elevation illustrating the working of the delivery tapes which I prefer to employ.

Figure 2ª is a detail showing a preferred arrangement of the suction and blowing holes in the blanket cylinder as well of a valve arrangement adapted to cooperate with the same.

Figure 3 is a plan view of the machine illustrated in Figure 2, certain unimportant parts being omitted.

Figure 4 illustrates a gear arrangement for moving one of the conveyor tapes employed in the printing machine according to the invention.

In carrying the invention into effect as shown, the essential parts of the printing machine consist of an off-set cylinder *a*, an impression cylinder *b*, which is half the diameter of the off-set cylinder *a* and a plate cylinder *c* which is preferably of the same diameter as the off-set cylinder so as to give more room for inspection and wiping. The direction of rotation of these cylinders is indicated in Figure 1 by arrows, from which it will be seen that the plate, after it has been in contact with the roller of the inking mechanism *e*, passes downwardly to the front of the machine where the plate can be seen and if necessary wiped by the attendant, who stands at the right hand side of the machine in Figure 1.

The cylinder *a* has two surfaces a^1 and a^2. The surface a^2 is covered with rubber which acts as a blanket or transfer. Between the two faces a^1 and a^2, grippers are accommodated in the cylinder *a* and are adapted to take up the sheet after printing and to pass it over to the sheet deliverer. The face a^1 of the off-set cylinder may have suction holes *h* through which the sheet is sucked on to the cylinder to be delivered on to a system of conveyor tapes *i* moving in the same direction in which the sheet moves. This delivery may be effected by breaking the suction and placing the holes in communication with a source of compressed air. Such mechanisms are well known and need not be herein fully described or illustrated.

The sheet is fed to the impression cylinder *b* by means of an auxiliary gripper *d* and is carried downwards in Fig. 1 by this cylinder, being seized by suitable grippers therein. Under the off-set and impression or printing cylinders, a system of tapes is arranged as hereinafter described and is designed to take the printed sheet off the combined transfer and delivering cylinder *a* and to convey the same to the pile directly below the plate cylinder *c* (Figs. 1 and 2).

The machine is driven in any convenient

manner as by a belt and transmission wheels *o*, *n*, *p* indicated in the drawings. To stop the printing the eccentric bearings of the cylinder *a* are oscillated in the well known manner so as to remove this cylinder from its contact with the plate and impression cylinders. One half of the plate cylinder *c* is fitted with a device for mounting the plate, the other half being ground with a plain smooth surface.

The inking mechanism *e* is arranged above the plate cylinder in such a manner that the inking rollers are in contact with the cylinder, the damping mechanism *f* of usual construction being arranged below the plate cylinder *c*. The damping mechanism serves as will be known to damp or moisten the plate cylinder *c* before each inking process in order to prevent the entire surface of the plate being covered with ink. Between the damping mechanism *f* and the inking mechanism *e*, a considerable space is left free on the cylinder and at this point the state of the surface of the plate cylinder may be readily observed and the surface dampened by hand, if required, prior to inking. An inking by hand may become necessary when the machine is started and the prepared part of the plate cylinder is situated between the damping and the inking mechanisms so that it can not be damped by the mechanism *f* before being inked. A damping by hand, or the like by means of a wet sponge, may also become necessary when an inspection of the machine shows that the mechanism *f* is operating unsatisfactorily.

The general operation will be readily understood from the above description. The sheet fed to the impression cylinder *b* by the auxiliary grippers *d* is printed at one revolution of the cylinder *b* by its contacting with the rubber blanket of the cylinder *a* and at the next revolution of the cylinder *b*, the grippers mounted on the blanket cylinder *a* take the sheet over from the impression cylinder *b* and carry it round to the sheet delivery tapes. The vacuum, which acts through the holes *h* sucks the sheet on to the cylinder *a* during this operation. At the moment of delivering the sheet on to the tapes, the vacuum is displaced by compressed air whereby the sheet is delivered on to the tapes *i*, which are moving in the same direction and speed as the sheet, that is from left to right in Fig. 1.

The toothed wheel *n* operates by means of the gears *p* and *o* the toothed wheel o^1 of the cylinder *a*. From the gear o^1 the movement is transmitted to the shaft of the pulleys *k* by means of the gear k^3 and an intermediate gear k^2, which latter is arranged in the shaft s^1. This device is clearly shown in Fig. 4. From this figure it will also be seen that when the pulleys *k* are operated, the tapes operated by the same will be moved in the same direction and with the same velocity as the wheel o^1, the cylinder *a* and the sheet upon the same.

The surface of the combined blanket and delivery cylinder *a* may be grooved and in front of this cylinder, blades *g* may be arranged directly opposite and in register with these grooves so as to peel or strip the sheet off the cylinder *a*, the end of the sheet being held during this peeling operation by the rollers k^1, which bear on the unprinted sides of the paper. The sheets are thus passed in a flat uncrinkled state to the tapes. When compressed air is used the blades *g* and rollers k^1 may be omitted. The tapes are arranged in two groups guided over pulleys. One group of tapes, moving in the direction of the sheet passing from the cylinder *a*, takes the sheet off and delivers it to the other group of tapes, which transport the sheet in the opposite direction and deliver it on to the pile.

The first mentioned group of tapes, guided over the pulleys *i* and *k*, move in the same direction and at the same speed as the printed sheet carried by the gripper of the cylinder *a*. These tapes take up the sheet which has been stripped off the cylinder *a* by the blades *g*.

As soon as the sheet is placed on the tapes which pass over the pulleys *i* and *k*, these pulleys, which are mounted on levers, are swung around the axes *s* and s^1 so as to lower the tapes whereby the sheet is transferred on to a second set of tapes, which are guided over the pulleys *j*, *m*, *l*, and j^1 and which at the time of the transfer are actually at rest. The sheet which has come to rest in this manner is delivered by this second set of tapes to the pile. The pulleys *j* and j^1 are stationary, whilst the pulleys *l* and *m* are transportable with the rack *z* and are moved forward and backward by the crank *x* and the transmission gear wheels *r* and r^1, of which the wheel *r* gears with the stationary rack *y*, whilst the wheel r^1 gears with the transporting rack *z*. The rack *z* is shown in full lines in its extreme position to the left in the figures when a sheet has been placed on the pile. When the rack *z* is moving towards the delivery pile, the pulleys *l* and *m* are secured against rotation by pawls, whereby the tapes with the printing sheet thereon are moved from under the cylinder *a* to a position over the delivery pile and the pulleys *j* and j^1 during this movement rotate freely. When the rack *z* moves back from left to right in the figures, the pulleys *j* and j^1 are locked and the pulleys *l* and *m* freed so that they roll upon the stationary conveyor tapes.

When the rack *x* moves from left to right in the figures, that is from the position shown in full lines to that shown in dotted lines, the pulleys *m* and *l* are carried along

with it but the tapes remain stationary and the relative movements of the parts produces the same effect as if the tapes were moving to transport the sheet from right to left. Similar tape delivery devices are known and the details may be varied within wide limits.

The sheet adhering to the surface of the cylinder *a* is carried round from the printing to the delivery position without any danger of altering its position on the cylinder, owing to the action of the vacuum. Slurring of the printed surface is thus prevented. As soon as the gripper on the off-set cylinder *a* brings the front edge of the sheet over the conveyor tapes *i*, *k*, the grippers release the sheet and air under pressure is admitted to what were suction holes till they pass the point where they lie directly over the conveyor. The rear part of the sheet continues to be held by the other rows of suction holes. By this action of the compressed air, the sheet is uniformly deposited on the conveyor tapes and is pushed on by the action of the suction holes which have not yet reached the vacuum breaking position. The sheet is therefore properly laid on the conveyor tapes without any danger of slurring as the sheet is not moved on the surface of the cylinder and if the blades *g* are not used any friction of the sheet on these blades is also excluded.

The suction and blowing holes are arranged in successive rows upon the circumference of the cylinder. For the holes a valve device is arranged at the end of the cylinder in a manner which will be evident to those skilled in the art. A constructional form of an advantageous arrangement is shown in section in Fig. 2^a. According to this arrangement a suction conduit h^1 and a pressure conduit h^2 are connected to a plant adapted to supply suction and pressure. Such plants will always be at hand in greater printing offices. The shaft of the cylinder *a* is equipped with a channel h^3 which by means of radial channels is interconnected with the series of holes in the periphery of the cylinder. When this cylinder *a* is rotating the holes *h* are by means of the radial channels alternately brought into connection with the section conduit h^1 and with the pressure conduit h^2 (or with the atmosphere). Such control valves are known per se. A single valve device may of course control one or more series of holes.

This pneumatic transmission of the sheet by the combined off-set and delivering cylinder *a* is of great importance in the execution of high class printing work.

I claim:

1. In a three cylinder off-set rotary printing machine, a combined off-set and delivery cylinder, a plate cylinder, means for rotating the off-set and plate cylinder in such a direction that the inked plate passes in view of the operator at the front or feeding side of the machine in moving from the inking rollers to the point where it transfers or inks on to the off-set blanket, and an auxiliary gripper for feeding the sheets to the front side of the impression cylinder.

2. In a three cylinder off-set rotary printing machine, a combined off-set and delivery cylinder, a plate cylinder of the same diameter as the said off-set cylinder, means for rotating the off-set and plate cylinders in such a direction that the inked plate passes in view of the operator at the front or feeding side of the machine in moving from the inking rollers to the point where it transfers or inks on to the off-set blanket and an auxiliary gripper for feeding the sheets to the front side of the impression cylinder.

3. In a three cylinder off-set rotary printing machine, a combined off-set and delivery cylinder, a plate cylinder of the same diameter as the said off-set cylinder, means for rotating the off-set and plate cylinders in such a direction, that the inked plate passes in view of the operator at the front or feeding side of the machine in moving from the inking rollers to the point where it transfers or inks on to the off-set blanket, an auxiliary gripper for feeding the sheets to the front side of the impression cylinder, holes on the combined off-set and delivery cylinder, on the transporting surface thereof, and means in connection with said holes for applying suction therethrough to the said holes, in order to retain the sheet without danger of slurring.

4. In a three cylinder off-set rotary printing machine, a combined off-set and delivery cylinder, a plate cylinder of the same diameter as the off-set cylinder, said off-set and plate cylinders rotating in such a direction that the inked plate passes in view of the operator at the front or feeding side of the machine in moving from the inking rollers to the point where it transfers or inks on to the off-set blanket, an impression cylinder of half the diameter of the combined off-set and delivery cylinder and an auxiliary gripper for feeding the sheets to the front side of the said impression cylinder.

5. In a three cylinder off-set rotary printing machine, a combined off-set and delivery cylinder, a plate cylinder of the same diameter as the off-set cylinder, said off-set and plate cylinders rotating in such a direction that the inked plate passes in view of the operator at the front or feeding side of the machine in moving from the inking rollers to the point where it transfers or inks on to the off-set blanket, an impression cylinder of half the diameter of the combined off-set and delivery cylinder, an auxiliary gripper for feeding the sheets to the front side of

the said impression cylinder, holes in the transporting surface of the combined off-set and delivery cylinder, means adapted to apply suction through the said holes to the sheet in order to retain the same without danger of slurring, said holes being adapted to be placed in communication with a source of compressed air to permit the delivery of the sheets on to the tapes.

6. In a three cylinder off-set rotary printing machine, a combined off-set and delivery cylinder, a plate cylinder of the same diameter as the off-set cylinder, said off-set and plate cylinders rotating in such a direction that the inked plate passes in view of the operator at the front or feeding side of the machine in moving from the inking rollers to the point where it transfers or inks on to the off-set blanket, an impression cylinder, an auxiliary gripper for feeding the sheets to the front side of the said impression cylinder, grooves in the said combined off-set and delivery cylinder, stripping-off blades, arranged adjacent to the surface of said combined off-set and delivery cylinder and two groups of conveyor tapes, said stripping off blades peeling off the sheets from the combined off-set and delivering cylinder and delivering the same in a flat uncrimpled state to one group of conveyor tapes moving in the same direction as the sheets and delivering the sheets to the second group of conveyor tapes which moves in the opposite direction and delivers the sheets to the pile.

In testimony whereof I affix my signature.

ALFRED FALLOT.