Oct. 21, 1952 E. H. DAILY ET AL 2,614,316

AUTOMATIC ROTATING DESCALER FOR WHEEL BLOCKS OR THE LIKE

Filed March 16, 1949 2 SHEETS—SHEET 1

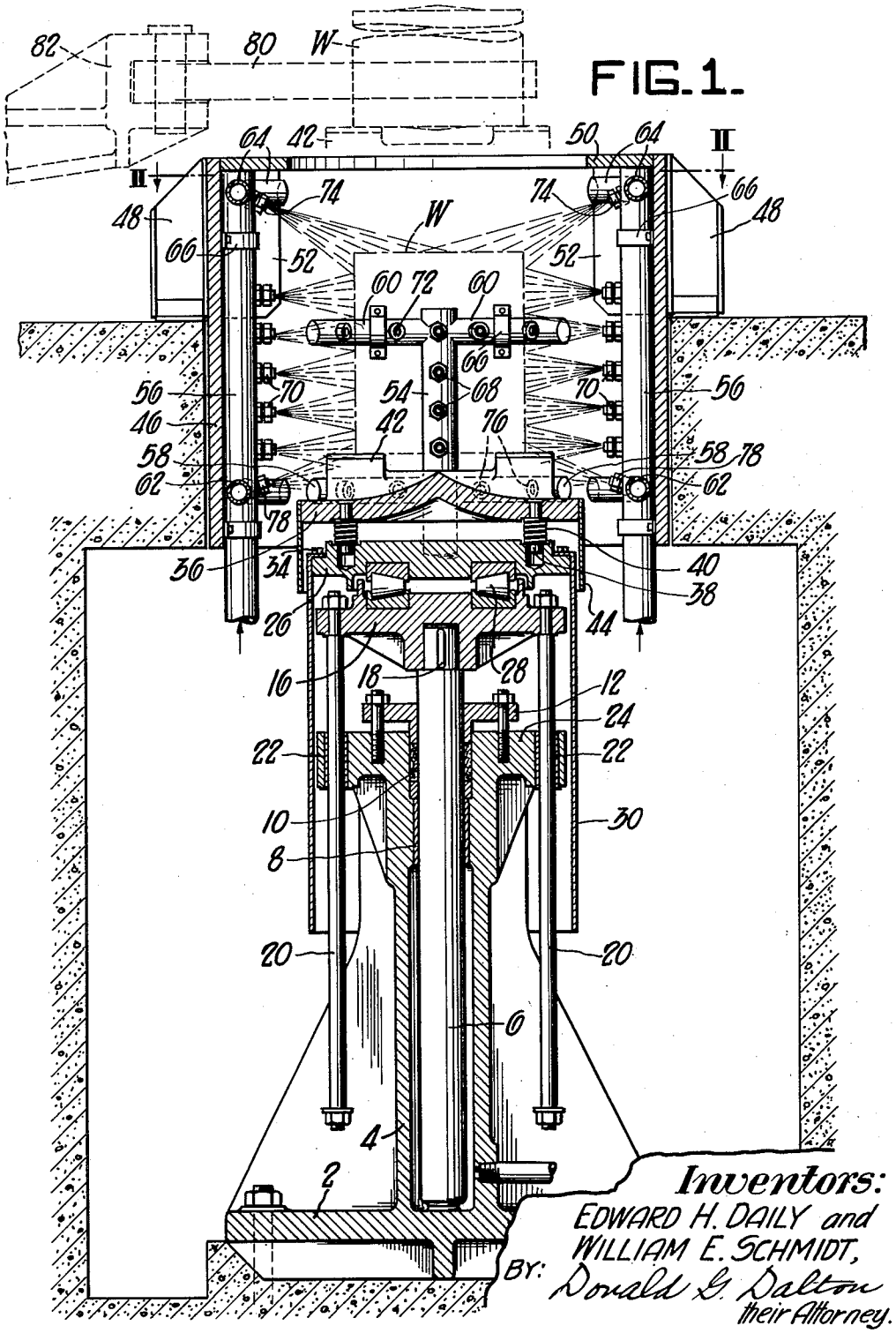

Inventors:
EDWARD H. DAILY and
WILLIAM E. SCHMIDT,
BY: Donald G. Dalton
their Attorney.

AUTOMATIC ROTATING DESCALER FOR WHEEL BLOCKS OR THE LIKE

Filed March 16, 1949 2 SHEETS—SHEET 2

FIG. 2.

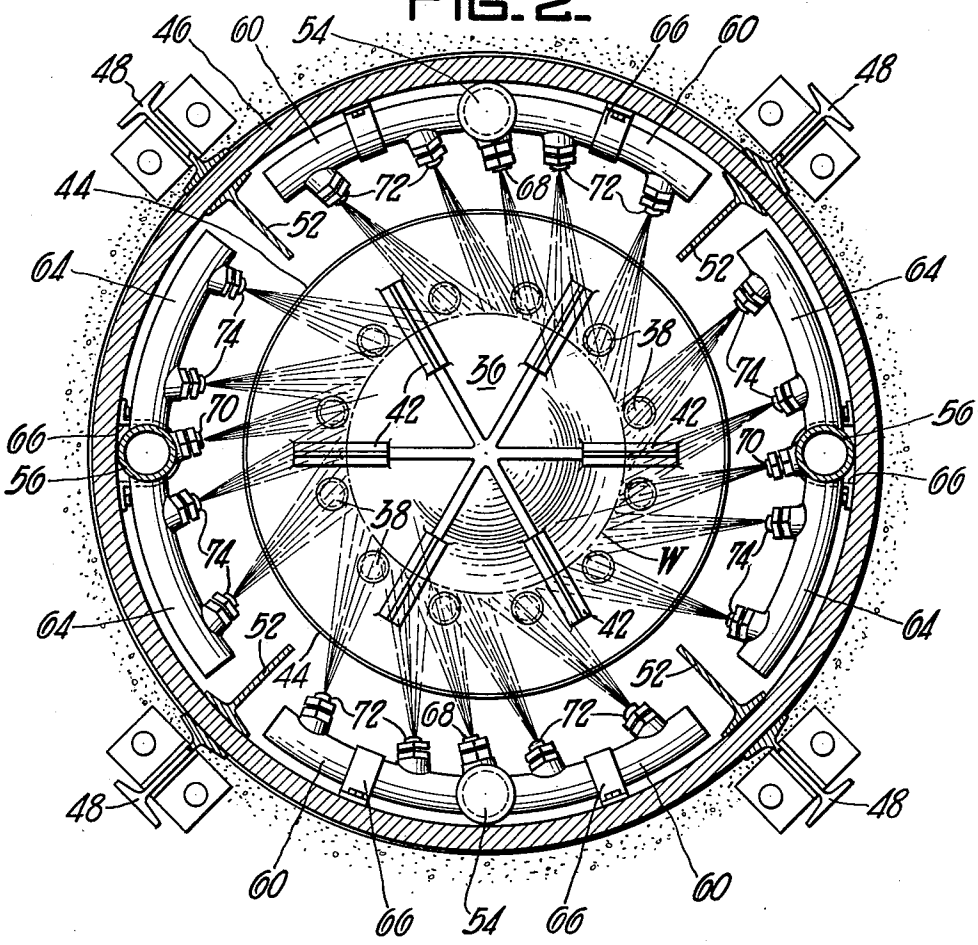

Inventors:
EDWARD H. DAILY and
WILLIAM E. SCHMIDT,
By: Donald G. Dalton
their Attorney.

Patented Oct. 21, 1952

2,614,316

UNITED STATES PATENT OFFICE

2,614,316

AUTOMATIC ROTATING DESCALER FOR WHEEL BLOCKS OR THE LIKE

Edward H. Daily, Michigan City, Ind., and William E. Schmidt, Chicago, Ill.

Application March 16, 1949, Serial No. 81,726

3 Claims. (Cl. 29—81)

1

This invention relates to a descaler and more particularly to a rotatable descaler utilizing high velocity water spray for descaling heated blanks before forging.

In the manufacture of railroad wheels, prior to our invention, cylindrical blocks of steel were heated above forging temperature, removed from the heating furnace and then subjected to a combined manual and mechanical descaling operation, after which it is forged in a heavy-duty press. The descaling operation is of considerable importance since a poor job of descaling results in particles of scale adhering to and being pressed into the surface of the workpiece and thus causing "pits" when the wheel is forged. This, of course, results in a poor quality wheel which must be rejected. The descaling must be done quickly so that sufficient heat remains in the block to enable it to be forged properly.

In the prior practices of manual or mechanical descaling, the heated wheel block was placed on a stool where workmen with long cutter bars chipped the heavy scale off manually. The heat given off by the block forced the men to stand and descale the block from a distance of some 8 to 10 feet. After this, the wheel block transfer would pick up the block and move it into a mechanical descaler for removal of the finer scale which still clings to the block. This combined method of descaling operation was slow, inefficient and seldom thorough. The time of descaling varied and, therefore, no two blocks arrived at the forging press with the same temperature.

Although various mechanical devices have been tried in an effort to eliminate manual descaling, we are aware of none that have proved entirely satisfactory.

It is accordingly an object of our invention to provide a descaling apparatus which will descale the entire surface of a heat treated workpiece thoroughly and quickly.

Another object of our invention is to provide a descaling apparatus wherein a heat treated workpiece may be rotated and thoroughly descaled by the action of a plurality of high velocity sprays of water.

These and other objects will become more apparent after referring to the following specification and attached drawings, in which:

Figure 1 is an elevational view, partly in section; and

Figure 2 is a view taken on the line II—II of Figure 1.

Referring more particularly to the drawings,

2

reference numeral 2 indicates a base supporting a vertical cylinder 4 which has a piston 6 slidingly fitted therein. A bushing 8, a packing 10, and a gland 12 fit into and complement the cylinder 4. A crosshead 16 is keyed, as at 18, on the top end of the piston 6. Guide rods 20 are attached to the crosshead 16 and extend downwardly therefrom, passing through bushings 22 to prevent rotary movement of the piston 6. Stop member 24 is provided to limit the upward travel of piston 6 and also to provide guide means for rods 20.

A turntable 26 is mounted on the crosshead 16. An anti-friction radial roller bearing 28 is interposed between the table 26 and the crosshead 16 to permit free rotation of the table. A guard or shield 30 is tightly bolted by beans of bolts 34 to the edge of table 26. Guard 30 extends downwardly from table 26 to protect the moving parts from water, scale and dirt. A platform 36 is mounted on the table 26 and is held in position by a plurality of spring pins 38. The spring pins 38 hold the platform 36 and table 26 together so that they will rotate as a unit together with a workpiece W mounted on platform 36. The pins are riveted or otherwise fastened solidly in the platform 36. A helical compression spring 40 surrounds each of the spring pins 38 between table 26 and platform 36. The springs 40 serve to cushion any impact due to the dropping of a workpiece W on the platform.

Rotor vanes 42 project upwardly from platform 36 for workpiece W to rest on. Vanes 42 are positioned radially and are provided with a knife-edge top surface to support the workpiece. The knife-edges are used to reduce the supporting area to a minimum so that the maximum surface area of the workpiece is exposed to the hydraulic spray. A shield or guard 44 is fastened to the side of the platform and extends downwardly therefrom to prevent water, scale and dirt from getting onto the top of the table 26.

A cylindrical housing 46 is provided for enclosing the workpiece W and for supporting the spray nozzles of the spray system which will be hereinafter more fully described. Housing 46 is preferably a weldment of heavy steel plates and structural parts. A support 48 is provided for bolting the housing unit solidly to the foundation. A guard 50 with stiffeners 52 projects inwardly from the top of housing 46 to protect the piping and nozzles of the spray system from possible damage by the workpiece.

The apparatus illustrated is designed to handle either long or short workpieces. A pair of vertical

headers or manifolds **54** are provided for use with a short workpiece and another pair **56** for use with a long workpiece.

The spray units are composed of two pairs of pipe assembled in the form of a letter H lying on its side and having paired legs **58** and **60** and paired legs **62** and **64** which are bent to fit the inside contour of the housing **46**. The vertical headers **54** and **56** are fastened to the housing by means of clamps **66**.

Nozzles **68** and **70** are provided in the vertical headers **54** and **56**, respectively, for emitting high velocity sprays of water. These nozzles are set at angles, as best shown in Figure 2, so that the sprays emitted therefrom will impinge on the surface of the workpiece at an angle from the normal in order to secure the most efficient descaling results. Also by striking the surface of the workpiece at an angle there is created a resultant tangential force which will cause the block to rotate with platform **36** and associated parts on radial roller bearing **28**.

Nozzles **72** and **74** are provided in top pipes **60** and **64**, respectively. These nozzles are all set at an angle from the radial position and point downward at an angle so as to allow the sprays to reach and descale the top surfaces of the various sized workpieces and to provide a tangential force for rotating the table and workpiece. Nozzles **76** and **78** are provided in the bottom pipes **58** and **62**, respectively. These nozzles are pointed upwardly at an angle so as to allow the sprays to reach and descale the bottom surface of the workpiece. The nozzles **76** and **78** are also disposed at an angle from the radial so that the sprays can exert a tangential force on the rotor vanes **42** to rotate the platform **36** and table **26** together on the radial roller bearing **28**.

The cylinder **4** is provided for lifting the table and platform assembly up to an elevated position, as shown in dotted lines in Figure 1, above the housing **46** where it will be in a position for receiving the workpiece from the tongs **80** of a conventional transfer **82**. Then when the table and platform assembly is lowered the workpiece will be positioned within housing **46** ready for descaling.

The guide rods **20** are provided to prevent rotation of the piston **6** in the cylinder **4** when the workpiece W is rotated with the table and platform assembly.

In operation, a workpiece such as a railroad wheel blank is transferred from a heating furnace to the descaler. The descaler receives the workpiece on the elevated table and platform assembly. The piston supporting the table and platform assembly is then lowered in the cylinder to place the workpiece in descaling position and the spray units are turned on. The high velocity sprays then rotate the platform and descale the workpiece. After the workpiece has been thoroughly descaled, the spray units are turned off and the piston is raised to bring the workpiece to the elevated position where it can be picked up by the transfer and carried to the forging press.

Although we have shown our apparatus as being rotated by the action of the sprays on the vane members, it is possible to utilize a gear drive to accomplish the desired rotation. Another method of accomplishing the rotation is to provide spiral guides which would rotate the table and platform assembly as the workpiece is raised and lowered through the spray zone.

While one embodiment of our invention has been shown and described it will be apparent that other adaptations and modifications may be made without departing from the scope of the following claims.

We claim:

1. An apparatus for descaling a workpiece comprising a vertical support member, a platform rotatably mounted on the upper end of said support member, a plurality of vanes projecting upwardly from said platform presenting a plurality of thin plates vertically positioned with their top edges in a common plane for supporting said workpiece, a housing surrounding and extending upwardly above said platform, a plurality of nozzles disposed around the inner periphery of said housing, said nozzles being directed toward said workpiece and said vanes, and means for supplying fluid through said nozzles at high velocities to direct said fluid against said vanes and said workpiece simultaneously to thereby rotate said platform and descale said workpiece.

2. An apparatus for descaling a workpiece comprising a vertical cylinder, a piston slidingly mounted in said cylinder and projecting upwardly therefrom, a crosshead fixedly mounted on the upper end of said piston, a guide member having a pair of spaced apart openings therethrough surrounding and attached to the outside wall of said cylinder adjacent its upper end, means attached to said crosshead for preventing the rotation of said piston and crosshead, said means comprising a pair of guide rods attached to said crosshead and extending downwardly therefrom through the spaced apart openings in said guide member, a freely rotatable table mounted on said crosshead, means for rotating said table, a workpiece supporting platform mounted on said table by means of a plurality of spring loaded pins, a housing surrounding and extending upwardly above said platform, and a spray system in said housing adapted to direct a plurality of high velocity sprays of water on said workpiece.

3. An apparatus for descaling a workpiece comprising a vertical cylinder, a piston slidingly mounted in said cylinder and projecting upwardly therefrom, a crosshead fixedly mounted on the upper end of said piston, a stop member having a pair of spaced apart openings therethrough surrounding and attached to the outside wall of said cylinder adjacent its upper end, means attached to said crosshead for preventing the rotation of said piston and crosshead, said means comprising a pair of guide rods attached to said crosshead and extending downwardly therefrom through the openings in said stop member, means on the lower ends of said guide rods for cooperating with the stop member to limit upward movement of said piston and crosshead, a freely rotatable table mounted on said crosshead, a platform mounted on said table, a plurality of vanes projecting upwardly from said platform, a knife-edge top surface on said vanes for supporting said workpiece, a housing surrounding and extending upwardly above said platform, and a spray system in said housing adapted to direct a plurality of high velocity sprays of water against said vanes and said workpiece simultaneously to thereby rotate said platform and descale said workpiece, said piston being adapted to raise said crosshead to thereby lift said workpiece out of said housing.

EDWARD H. DAILY.
WILLIAM E. SCHMIDT.

(References on following page)

REFERENCES CITED

The following references are of record in the file of this patent:

UNITED STATES PATENTS

Number	Name	Date
709,698	Colby et al.	Sept. 23, 1902
1,261,778	Deming	Apr. 9, 1918
1,285,583	Baily et al.	Nov. 26, 1918
1,397,652	Pierce	Nov. 22, 1921
1,695,412	Cotterill	Dec. 18, 1928
1,702,203	Day	Feb. 12, 1929

Number	Name	Date
1,703,946	Melish	Mar. 5, 1929
1,907,269	Selmer	May 2, 1933
2,178,701	Petre	Nov. 7, 1939
2,245,578	Enderich et al.	June 17, 1941
2,315,572	Wilson	Apr. 6, 1943
2,471,506	Wiswall	May 31, 1949
2,500,963	Somes	Mar. 21, 1950

FOREIGN PATENTS

Number	Country	Date
558,533	France	Aug. 29, 1923