US 20070156121A1

(19) United States

(12) Patent Application Publication (10) Pub. No.: US 2007/0156121 A1

Millman et al. (43) Pub. Date: Jul. 5, 2007

(54) ROBOTIC SURGICAL SYSTEMS WITH FLUID FLOW CONTROL FOR IRRIGATION, ASPIRATION, AND BLOWING

(75) Inventors: **Paul Millman**, San Jose, CA (US); **David Bailey**, Redwood City, CA (US); **Dean Hoornaert**, San Jose, CA (US); **David Stephen Mintz**, Sunnyvale, CA (US); **David Q. Larkin**, Menlo Park, CA (US); **John Magnasco**, San Jose, CA (US); **Gary Guthart**, Mountain View, CA (US); **Nitish Swarup**, Sunnyvale, CA (US); **Salvatore Brogna**, Pleasanton, CA (US)

Correspondence Address:
PATENT DEPT
INTUITIVE SURGICAL, INC
1266 KIFER RD
BUILDING 101
SUNNYVALE, CA 94086 (US)

(73) Assignee: **Intuitive Surgical INC.**, Sunnyvale, CA (US)

(21) Appl. No.: **11/454,359**

(22) Filed: **Jun. 15, 2006**

Related U.S. Application Data

(60) Provisional application No. 60/696,482, filed on Jun. 30, 2005.

Publication Classification

(51) **Int. Cl.**
A61B 17/00 (2006.01)

(52) **U.S. Cl.** **606/1**

(57) **ABSTRACT**

In one embodiment of the invention, a robotic surgical system is provided including a master control console and a surgical manipulator. The master control console generates control signals to cause one or more fluids to flow into or out of a surgical site. The surgical manipulator is coupled to the console to receive the control signals and includes at least one robotic arm and a surgical instrument coupled thereto. The surgical manipulator controls the surgical instrument in response to the control signals to control the flow of the one or more fluids into or out of the surgical site. The surgical instrument has a first robotically controlled valve that is responsive to the surgical manipulator and a hollow tube having a first end coupled to the first robotically controlled valve with an opening at a second end to direct the flow of one or more fluids.

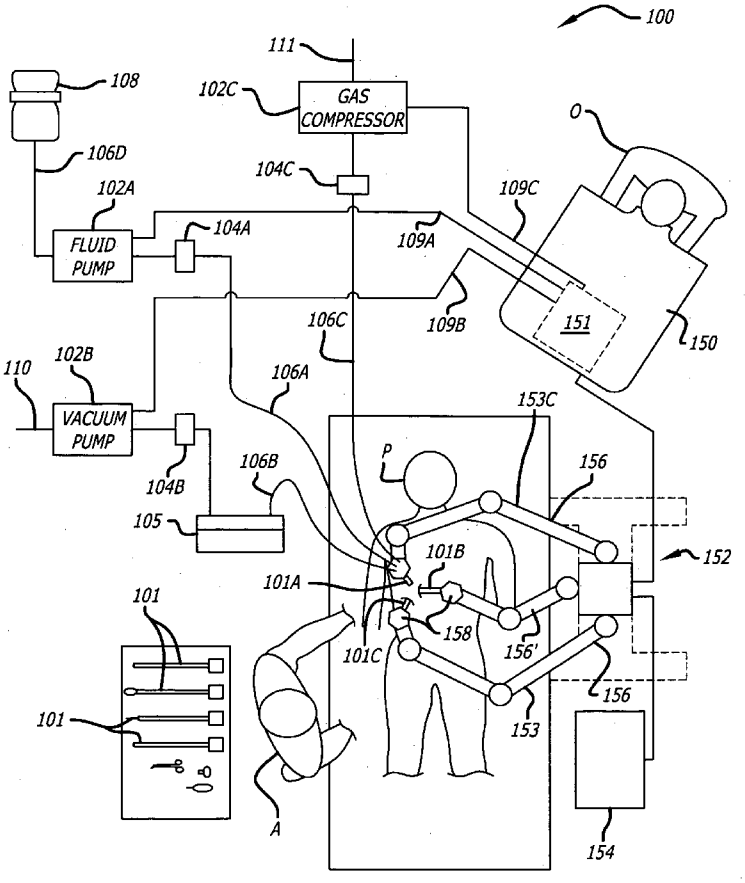

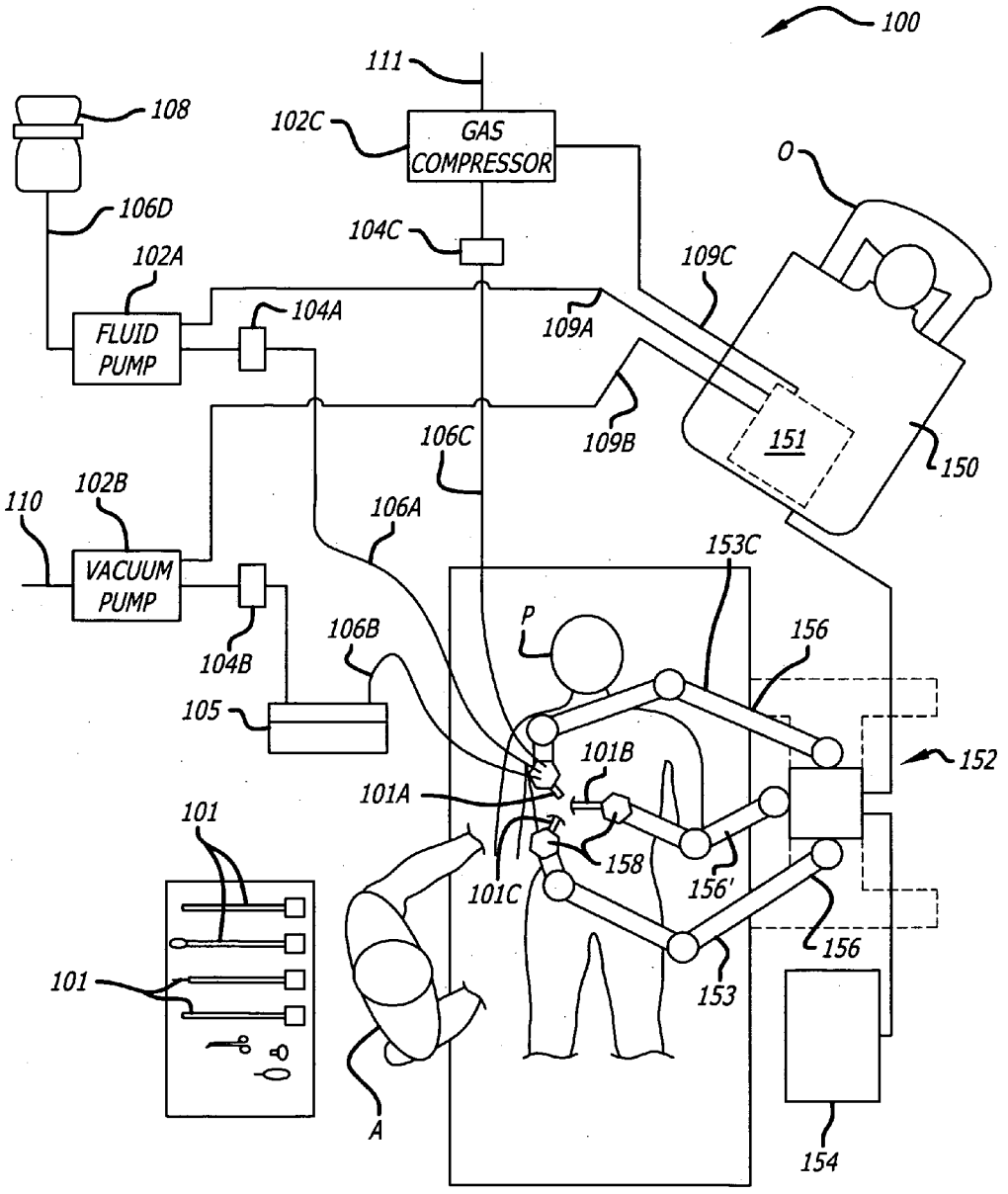
100
111
108
102C
GAS COMPRESSOR
O
106D
104C
102A
109C
104A
109A
FLUID PUMP
109B
151
150
106C
102B
110
106A
153C
VACUUM PUMP
P
156
106B
104B
105
101B
152
101A
101
158
156'
101C
156
101
153
A
154

FIG. 1

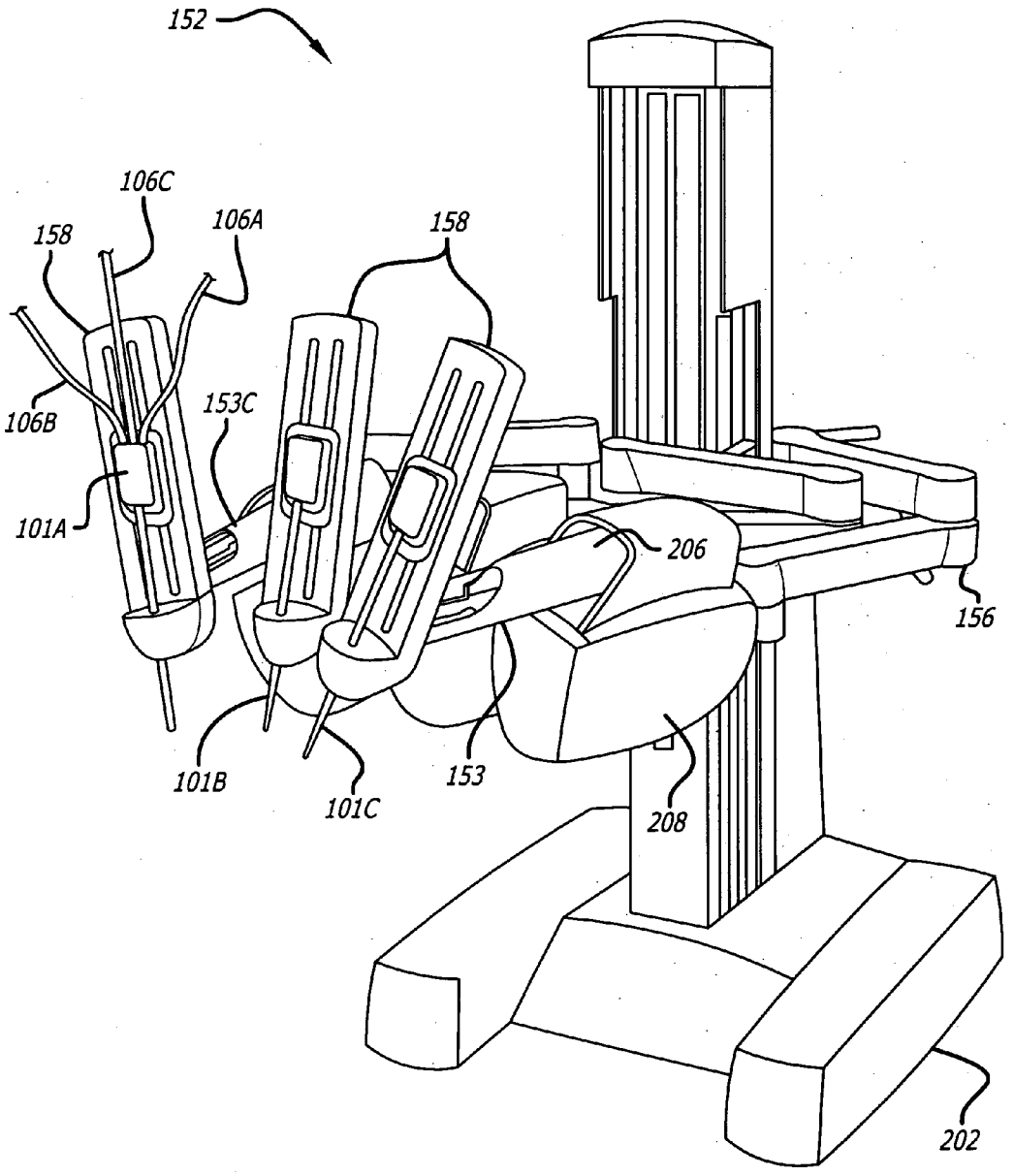
152
106C
158
106A
158
106B
153C
101A
206
156
101B
101C
153
208
202

FIG. 2A

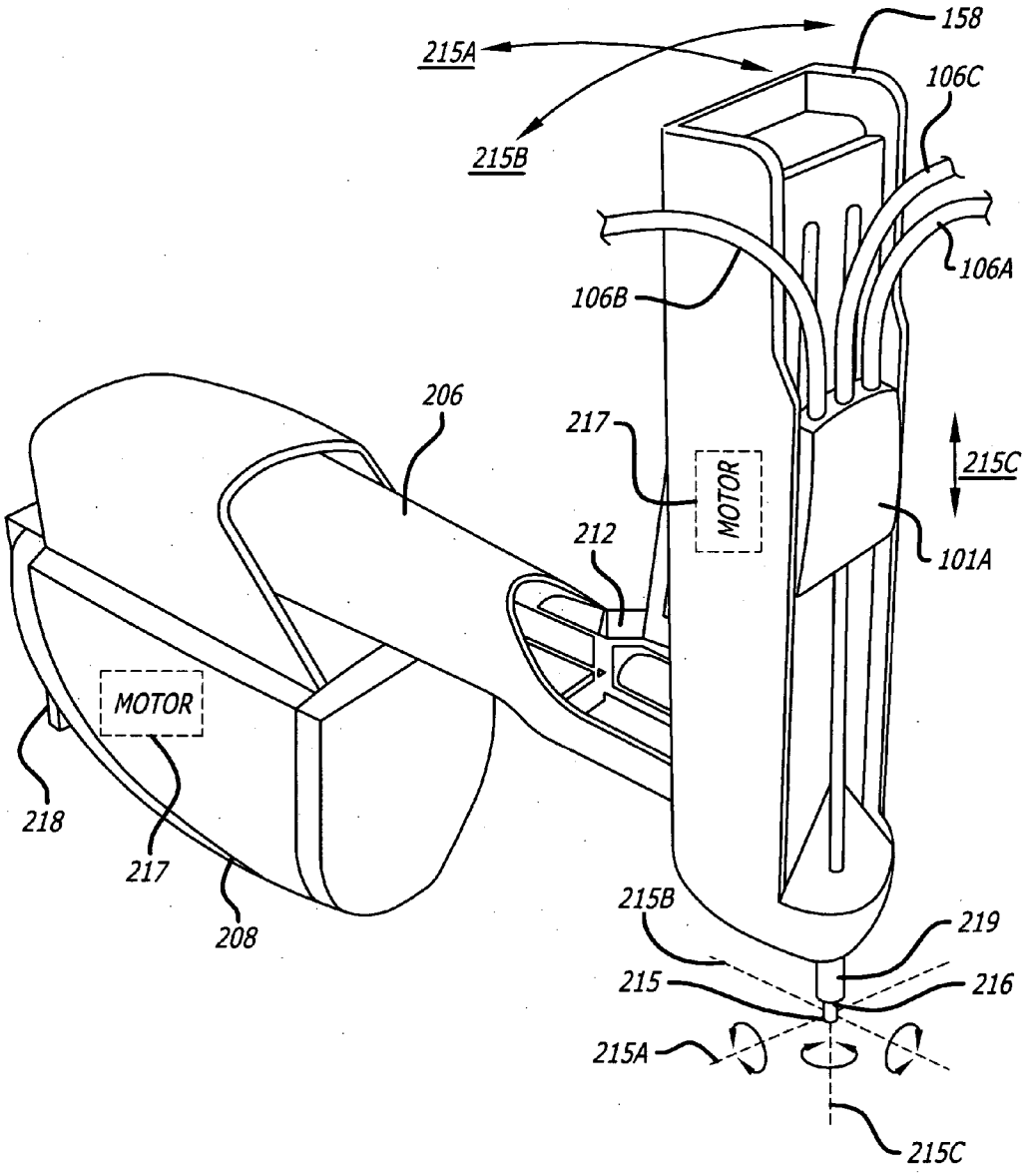
158
215A
106C
215B
106A
106B
206
217
MOTOR
215C
212
101A
MOTOR
218
217
208
215B
219
215
216
215A
215C

FIG. 2B

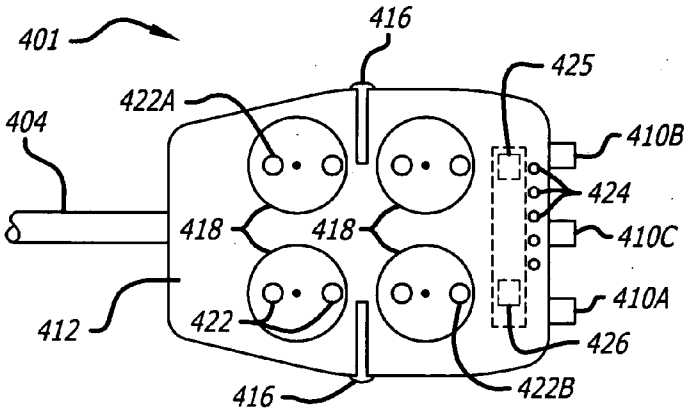

FIG. 4B

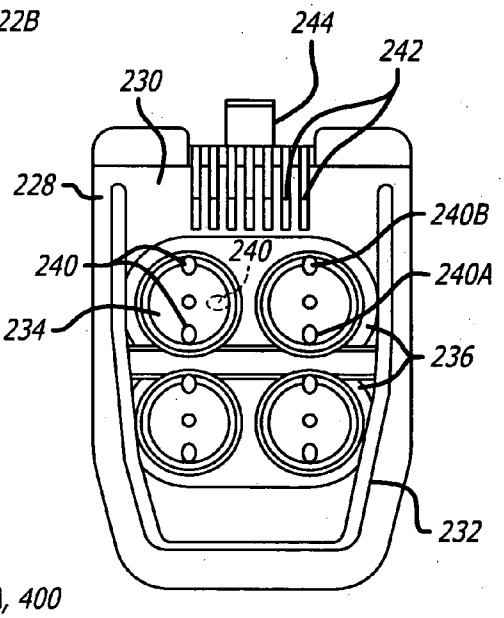

FIG. 2D

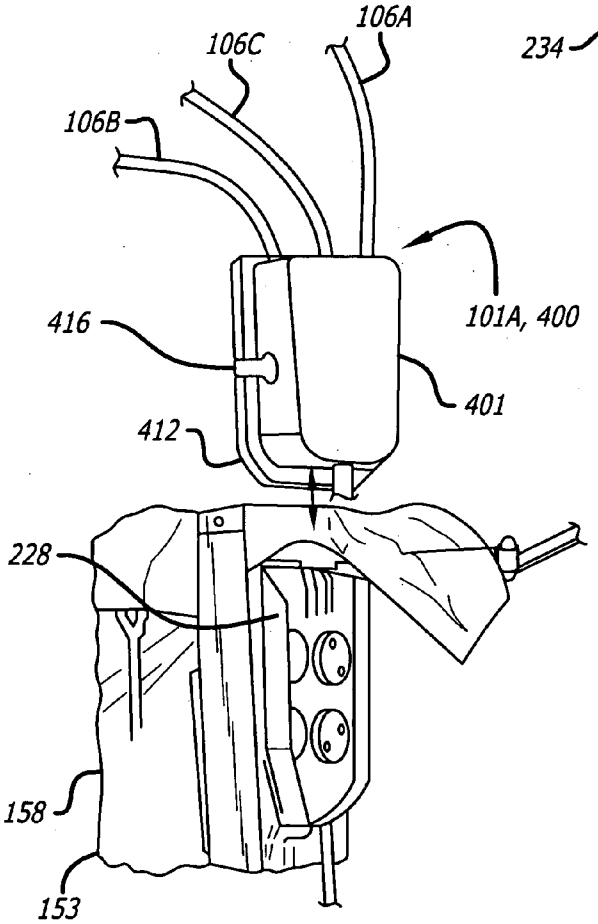

FIG. 2C

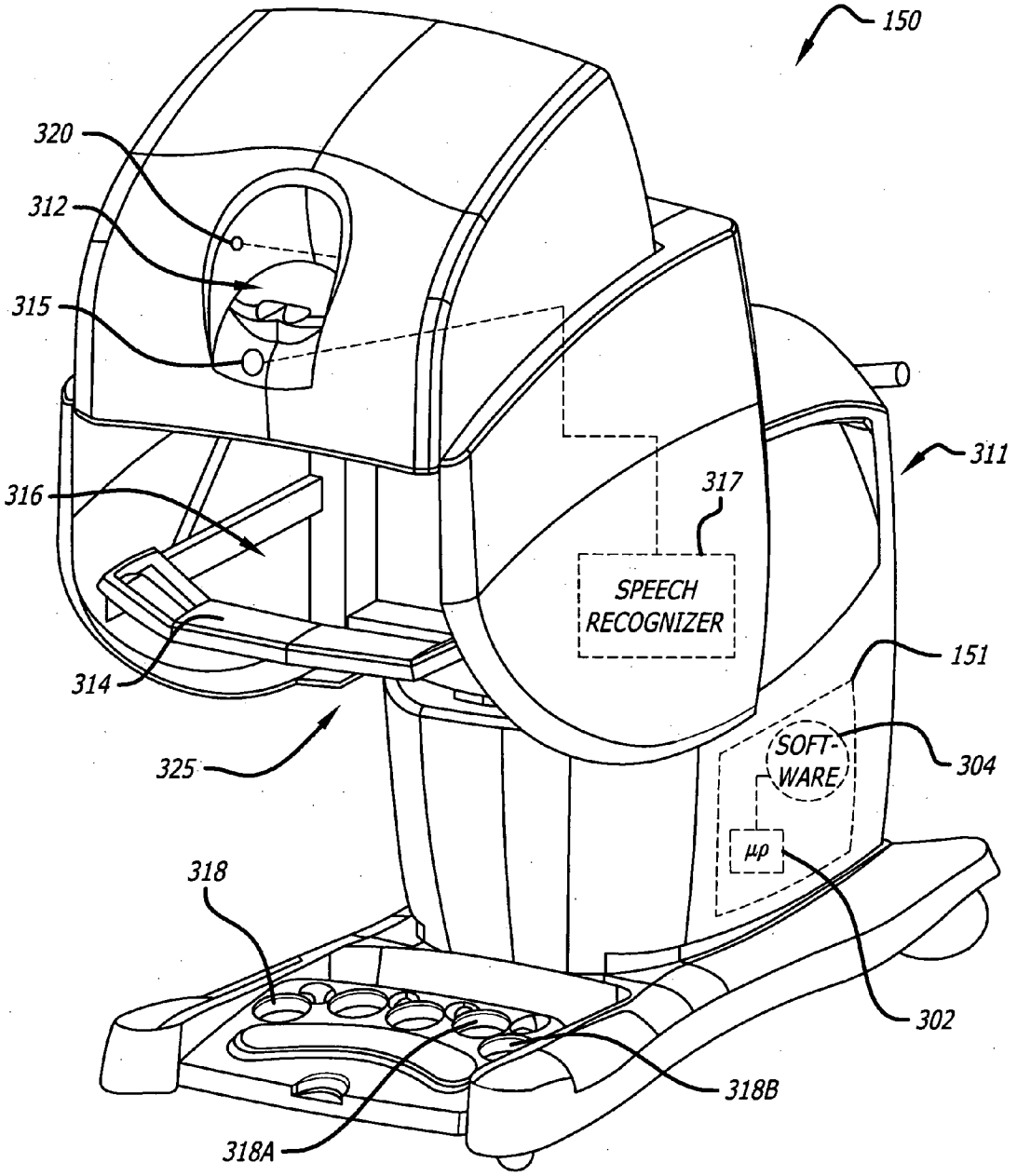
150
320
312
315
316
314
325
317
SPEECH RECOGNIZER
311
151
SOFT-WARE
304
μp
318
302
318B
318A

FIG. 3A

FIG. 3B

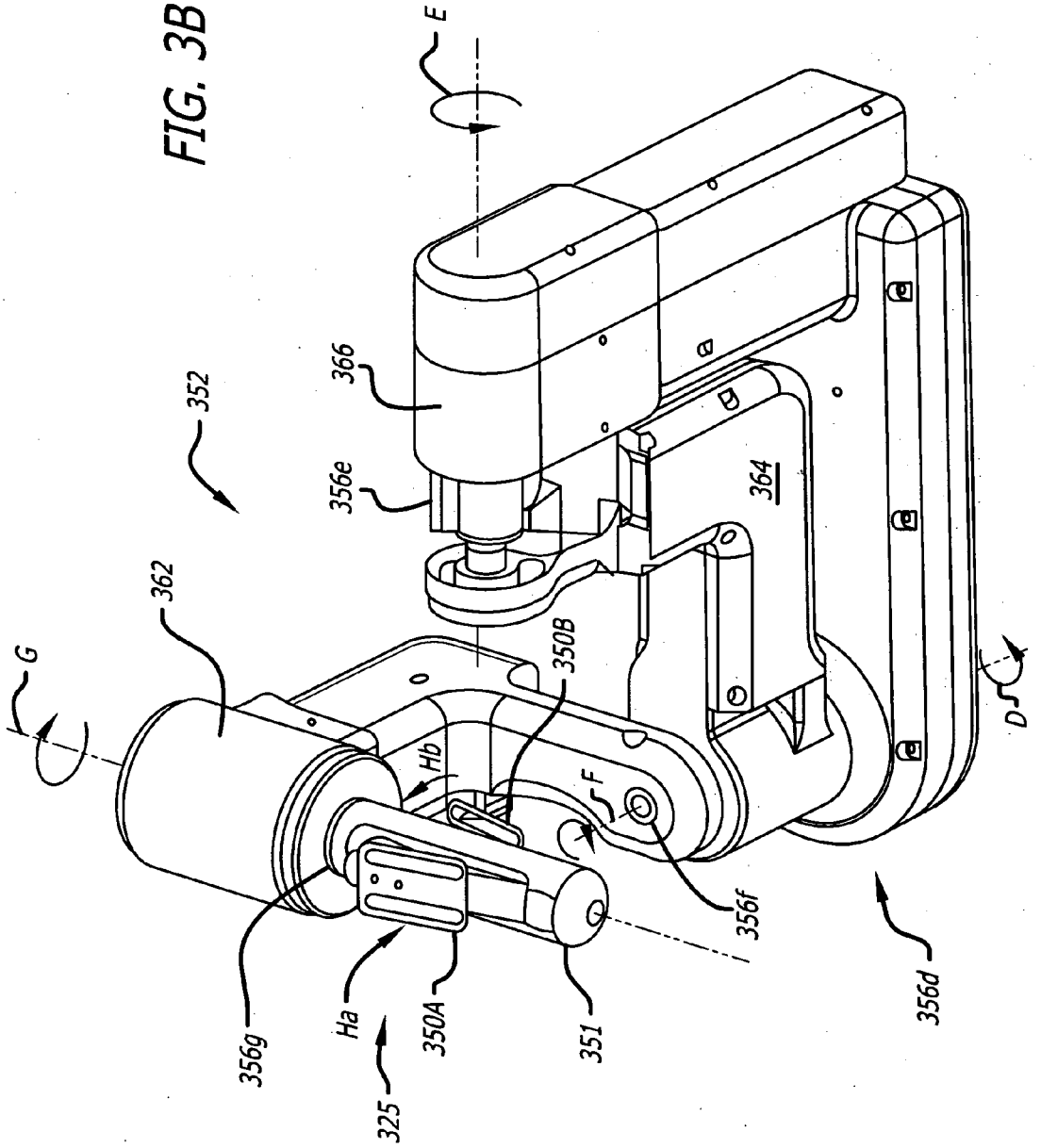
E
366
352
356e
364
362
350B
G
Hb
F
D
356f
356g
Ha
350A
351
325
356d

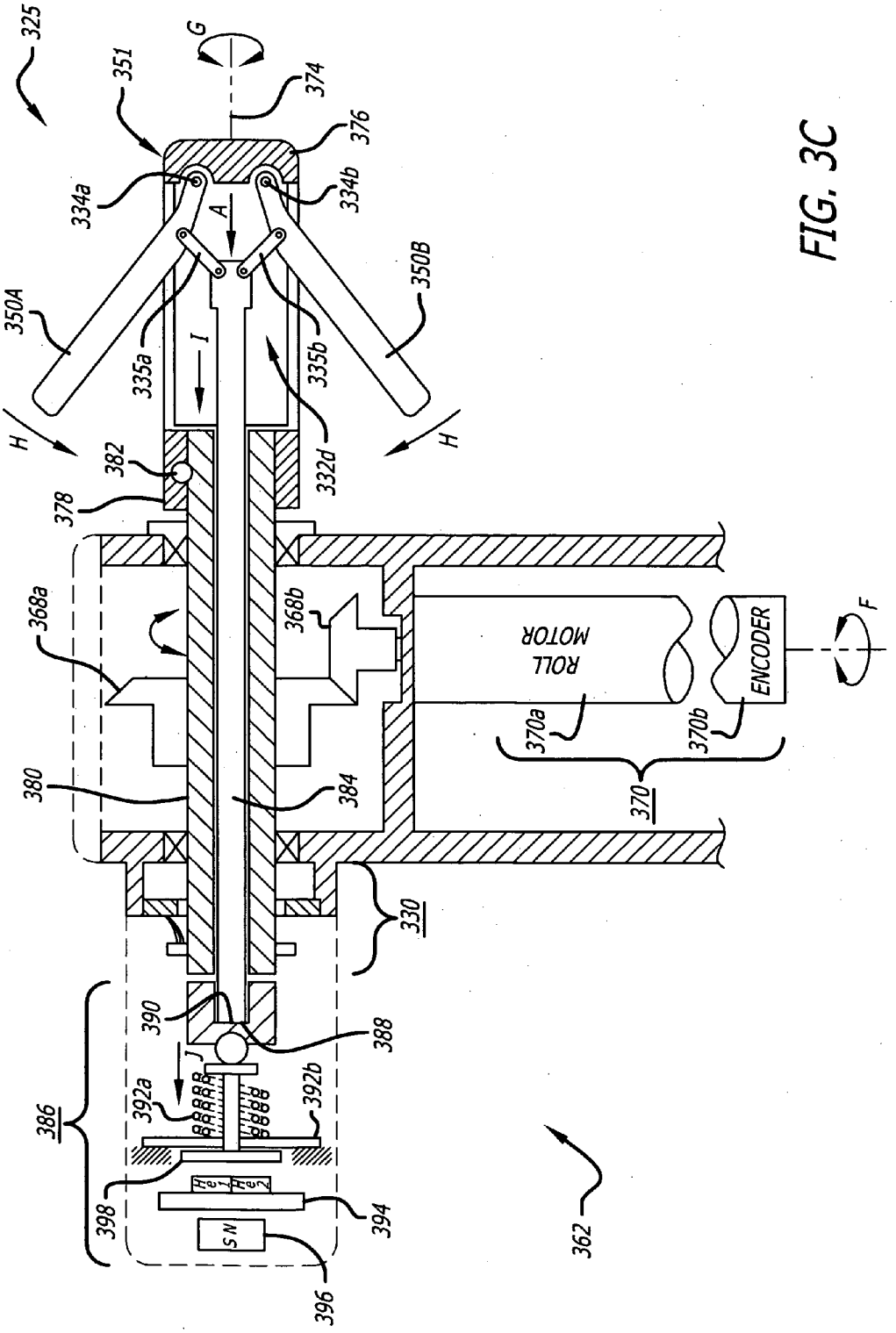
325
351
G
374
376
334a
334b
A
350A
350B
335a
I
335b
H
H
382
332d
378
368a
368b
ROLL MOTOR
ENCODER
F
370a
370b
370
380
384
330
390
388
J
386
392a
392b
398
394
362
S N
396

FIG. 3C

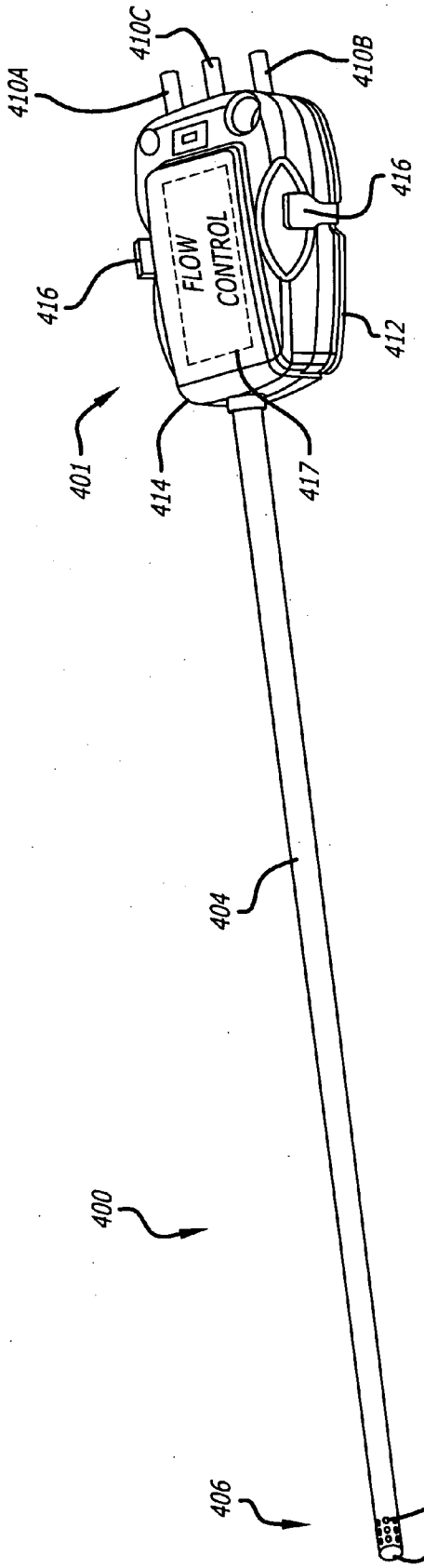
410C
410A
410B
416
FLOW CONTROL
416
412
401
414
417
404
400
406
422
424

FIG. 4A

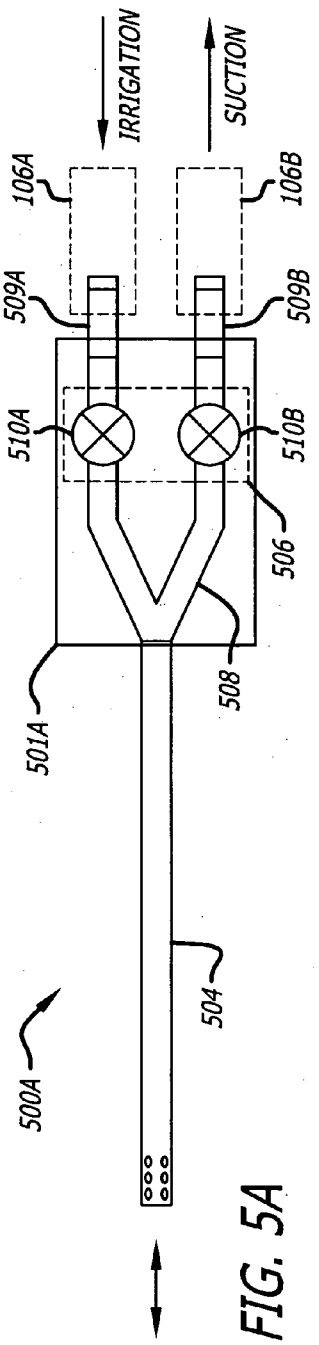

FIG. 5A

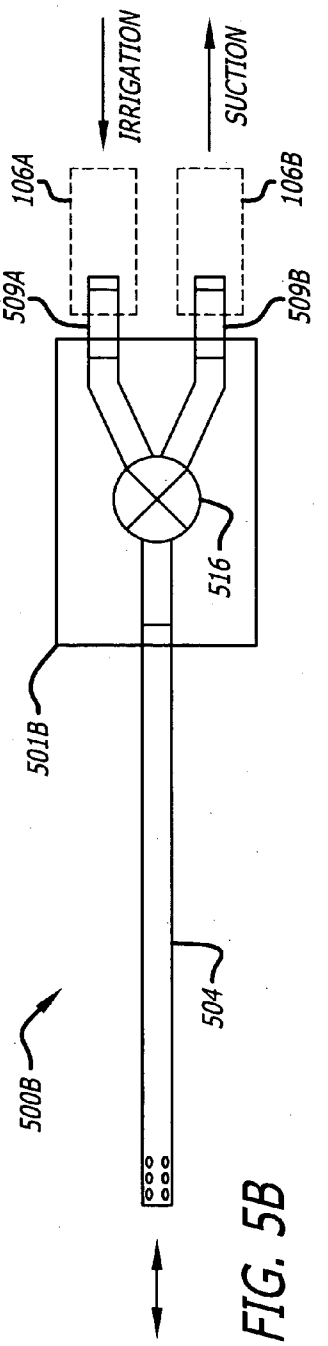

FIG. 5B

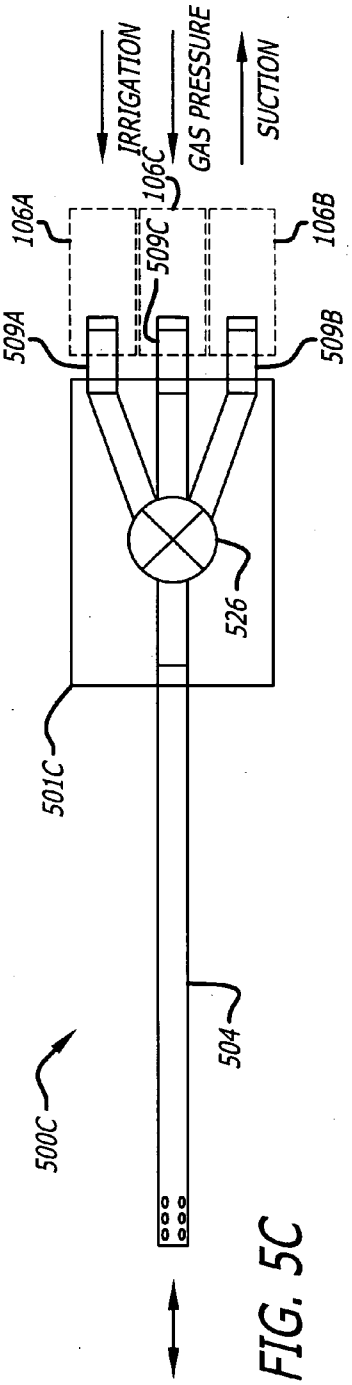

FIG. 5C

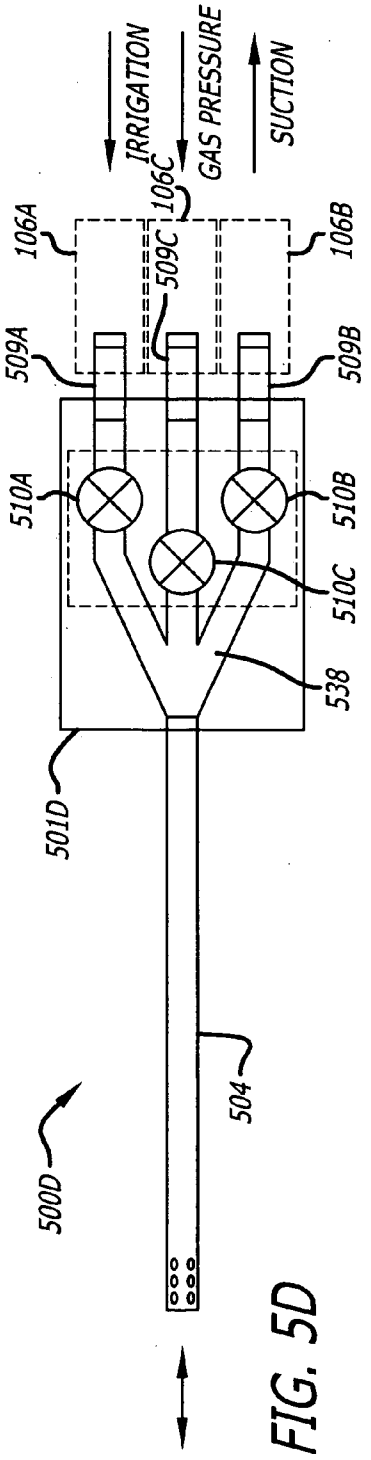

FIG. 5D

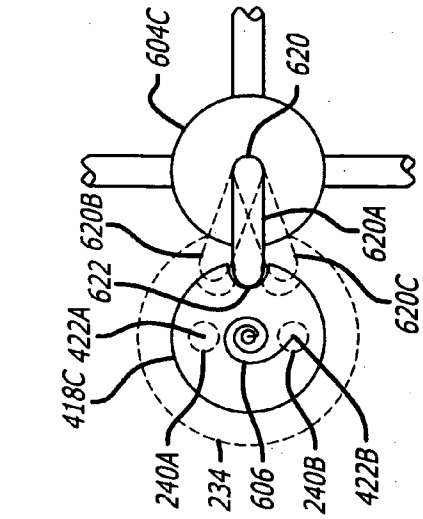

FIG. 6C

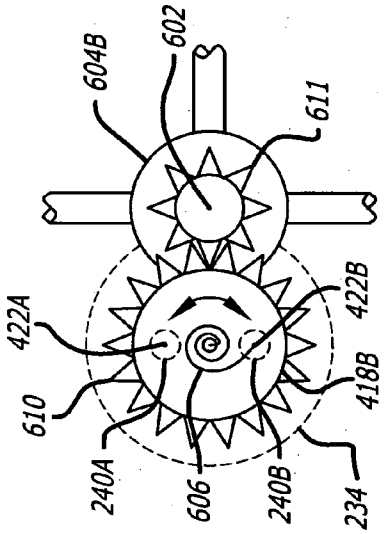

FIG. 6B

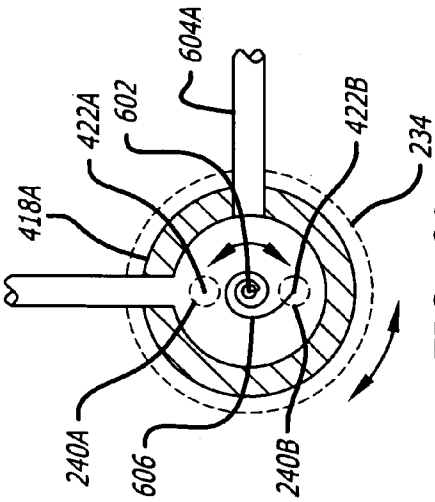

FIG. 6A

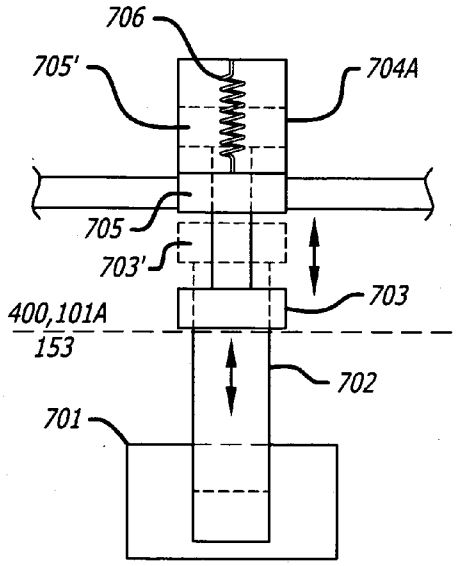

FIG. 7A

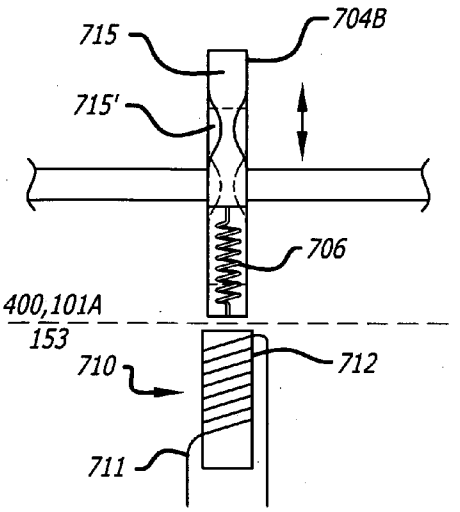

FIG. 7B

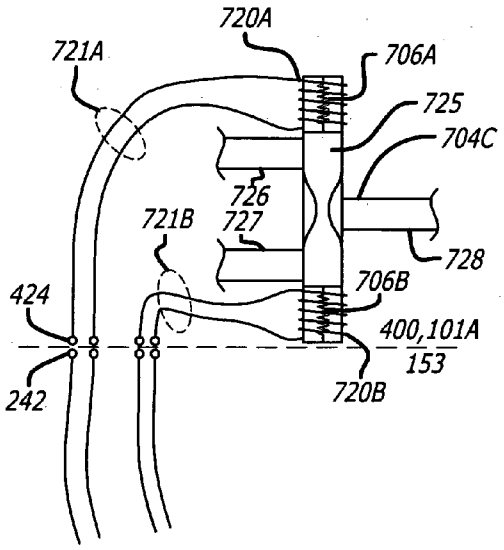

FIG. 7C

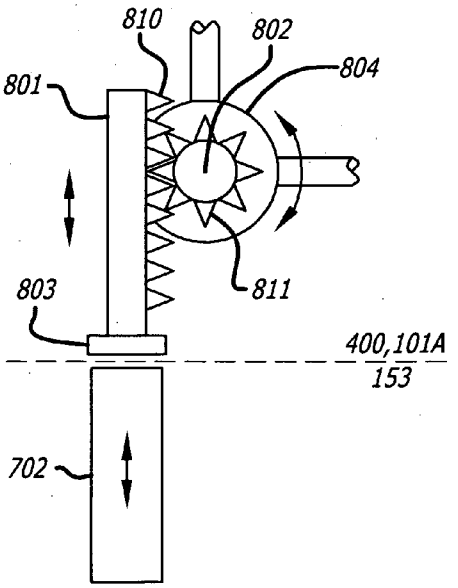

FIG. 8

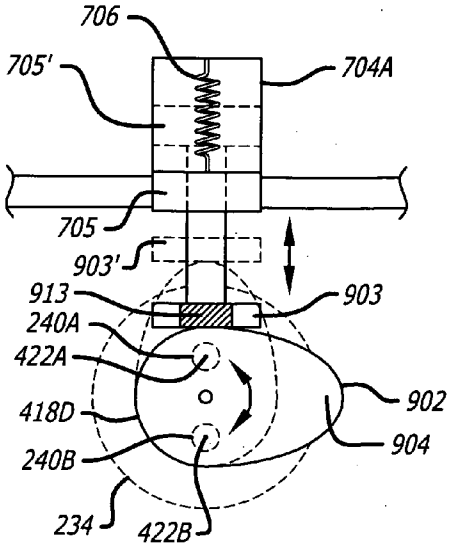

FIG. 9A

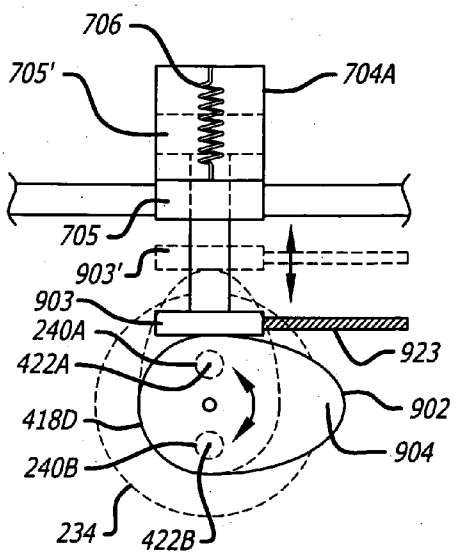

FIG. 9B

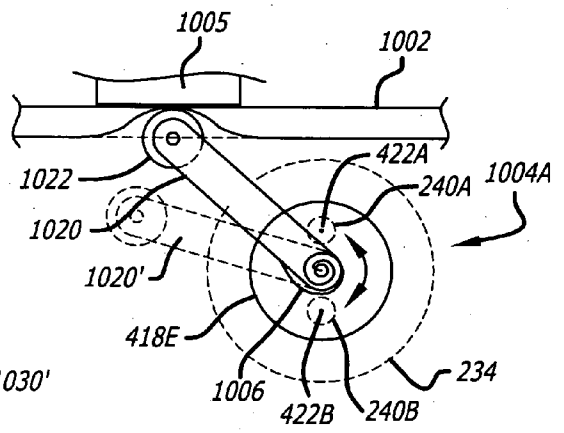

FIG. 10A

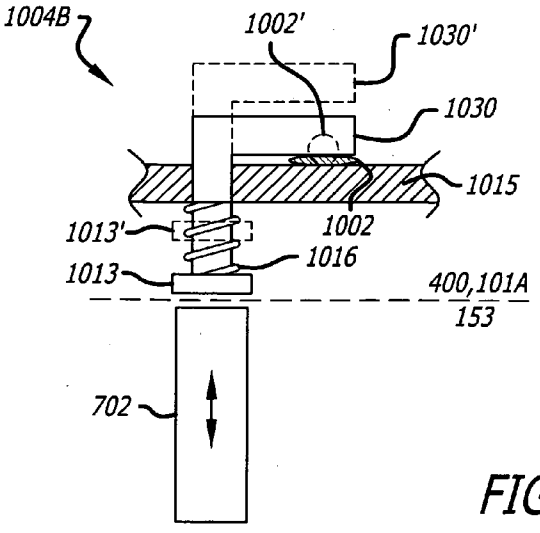

FIG. 10B

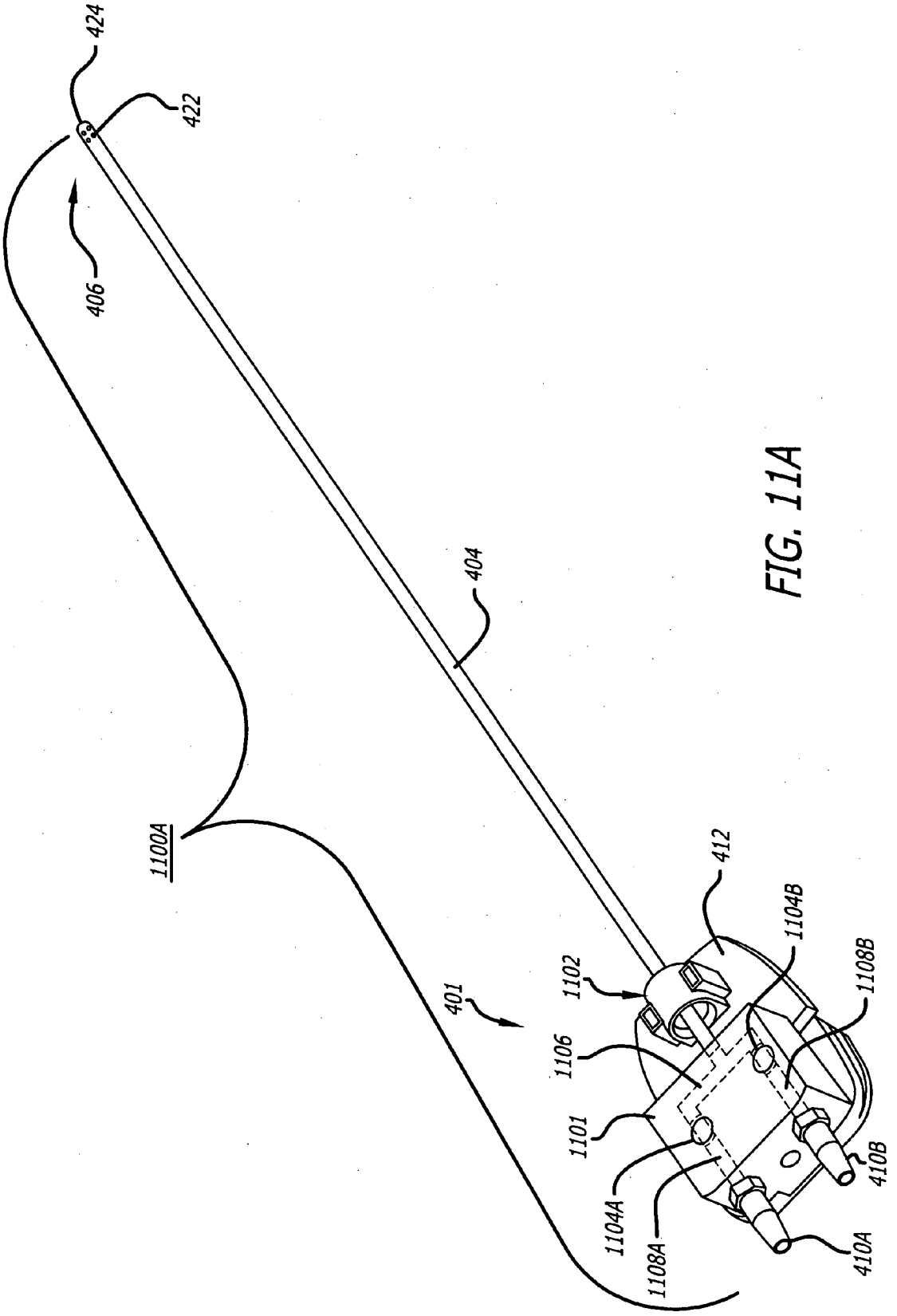
424
422
406
404
1100A
401
412
1104B
1108B
1102
1106
1101
1104A
1108A
410B
410A

FIG. 11A

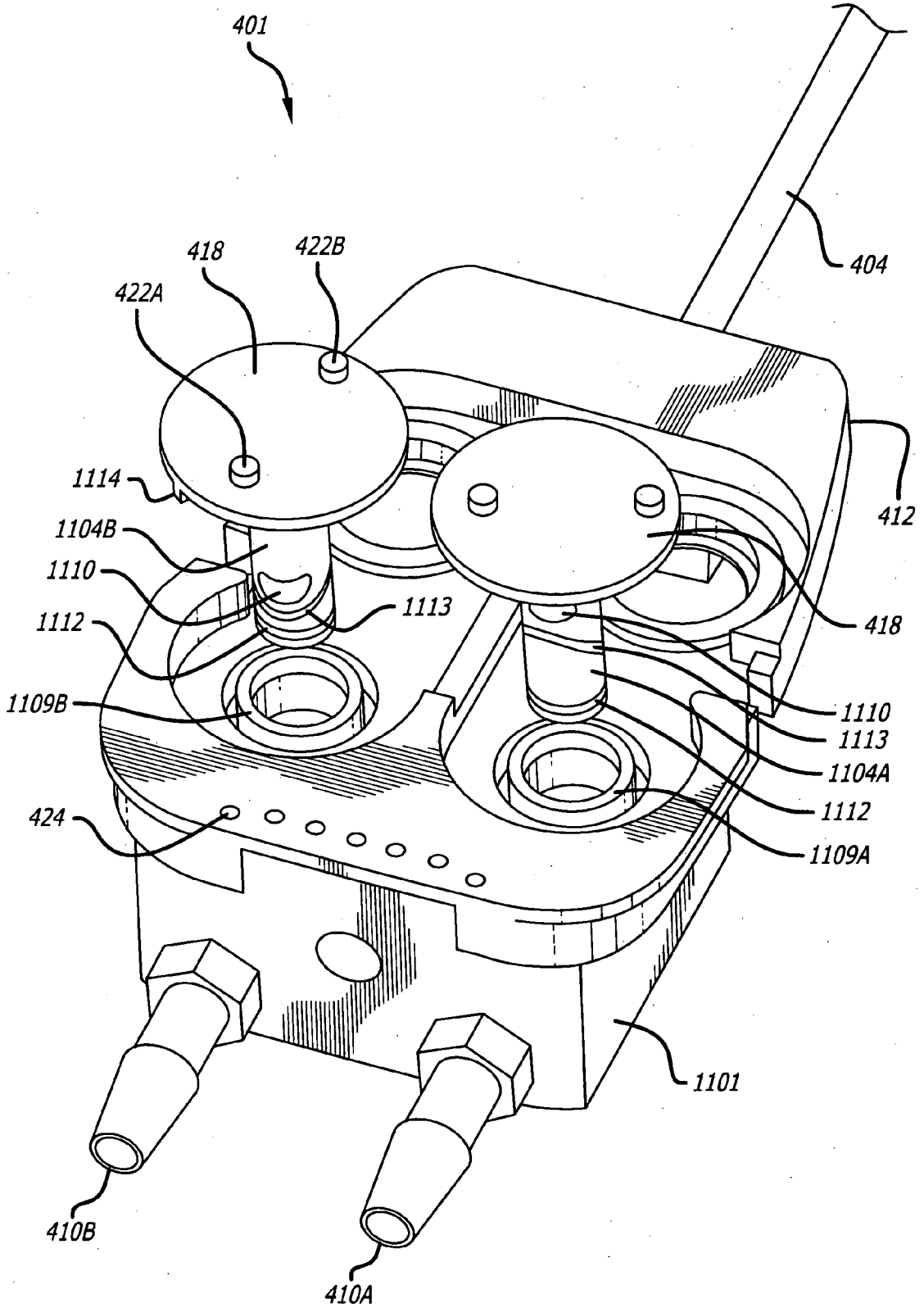
401
404
418
422B
422A
1114
412
1104B
1110
1113
1112
418
1109B
1110
1113
1104A
1112
424
1109A
1101
410B
410A

FIG. 11B

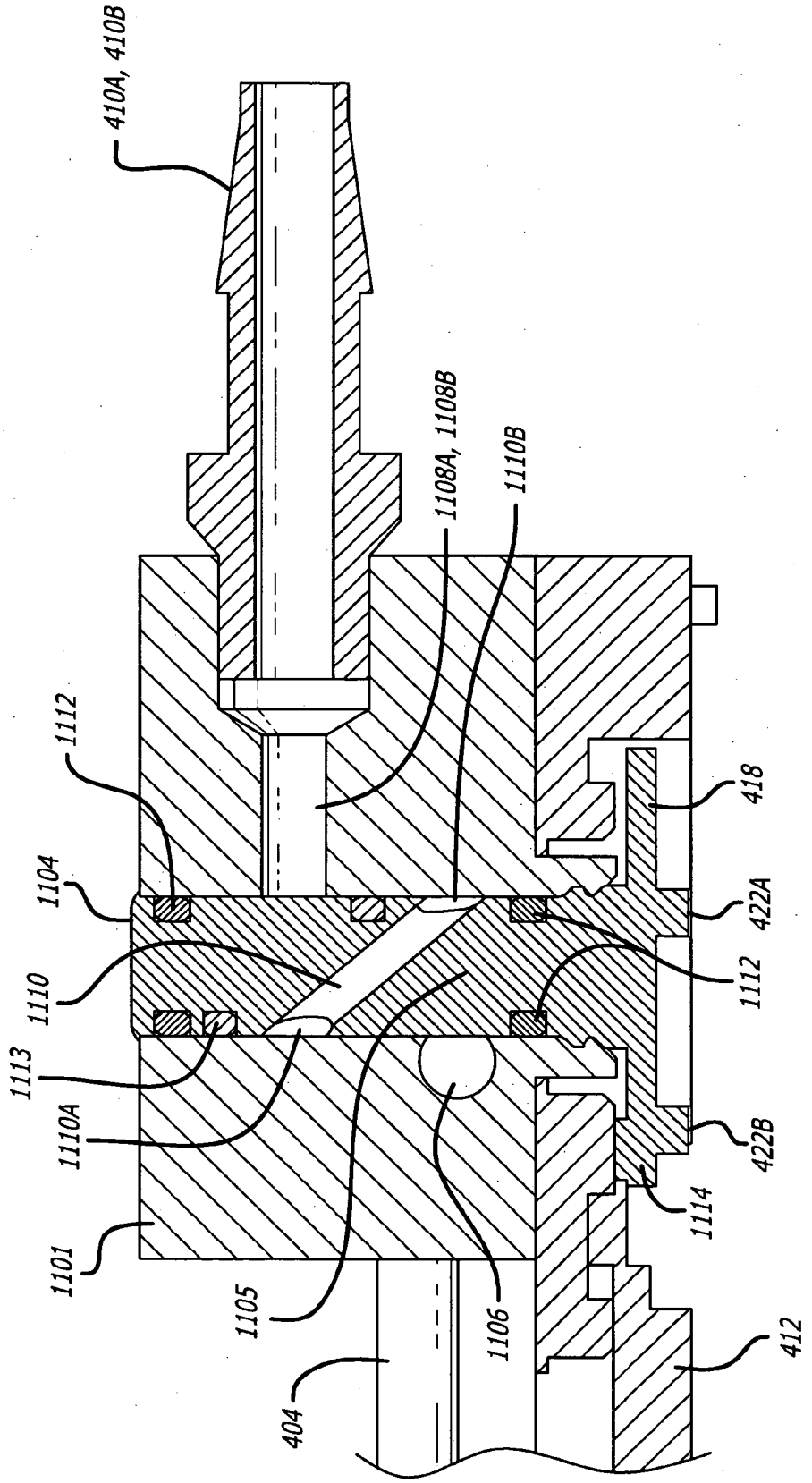
410A, 410B
1108A, 1108B
1110B
1112
418
1104
422A
1110
1112
1113
1110A
422B
1114
1101
1105
1106
412
404

FIG. 11C

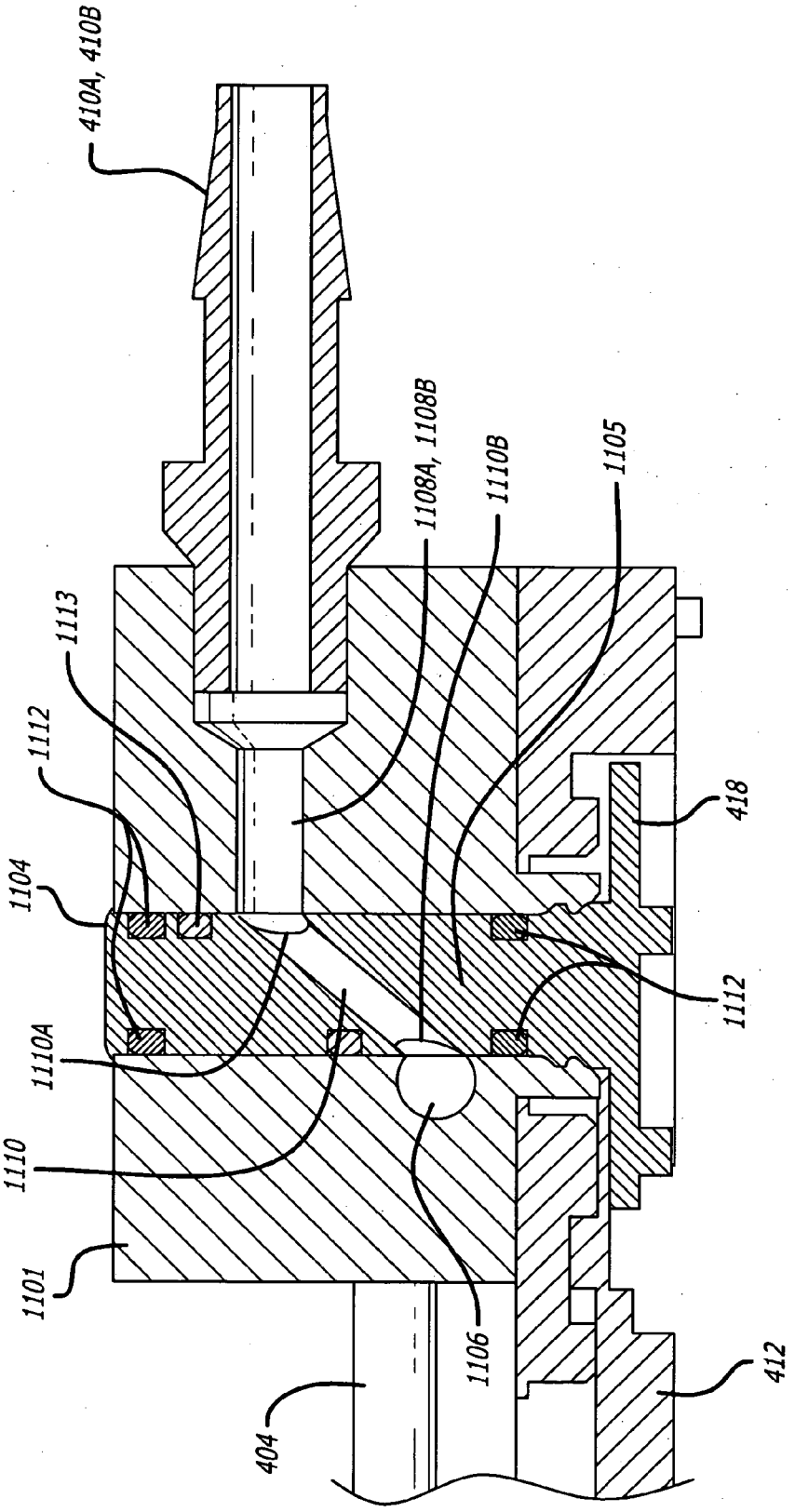
410A, 410B
1108A, 1108B
1110B
1105
1113
1112
418
1104
1112
1110A
1110
1101
1106
412
404

FIG. 11D

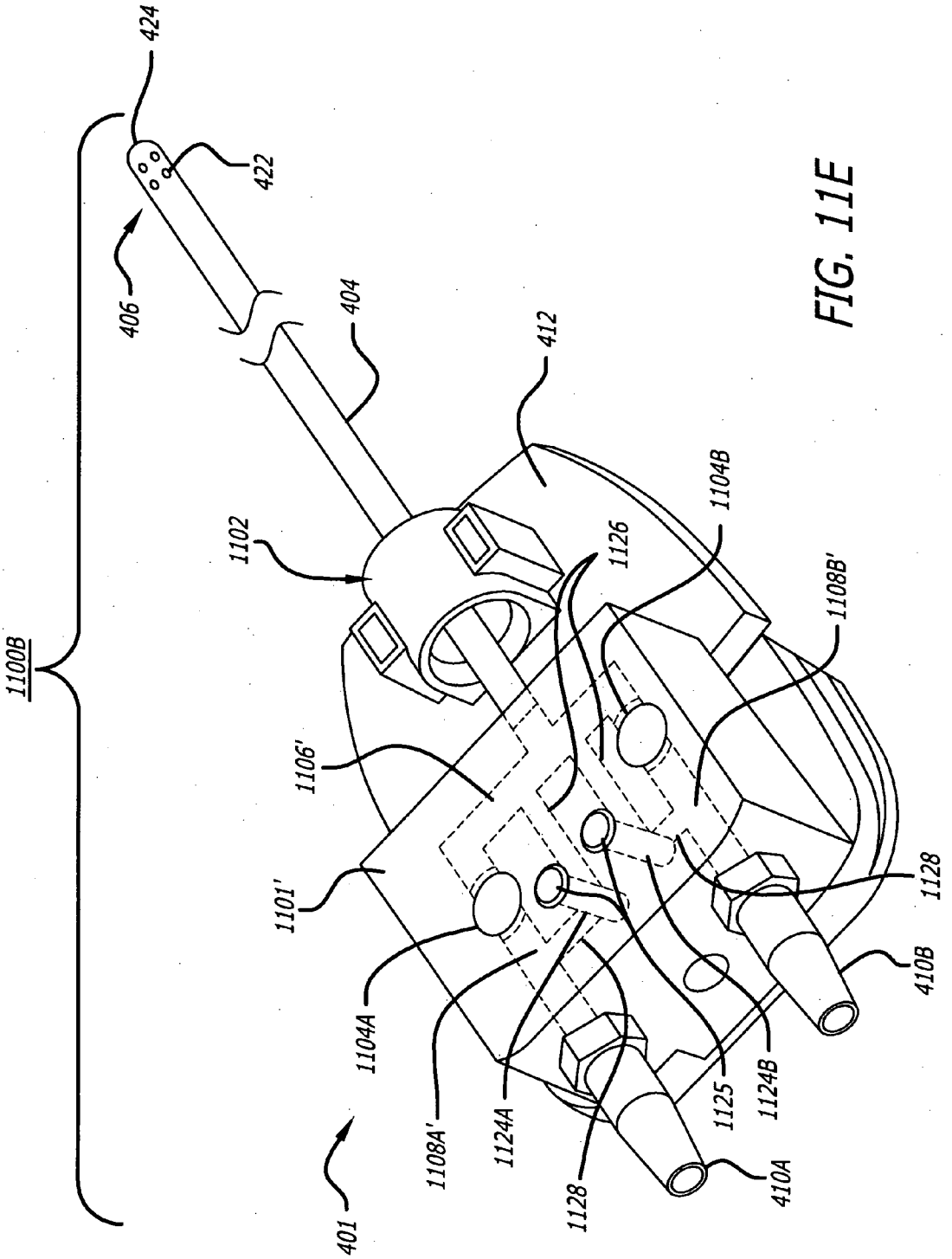
424
422
406
404
412
1102
1104B
1126
1108B'
1100B
1106'
1101'
1128
1104A
410B
1108A'
1124A
1125
1124B
1128
410A
401

FIG. 11E

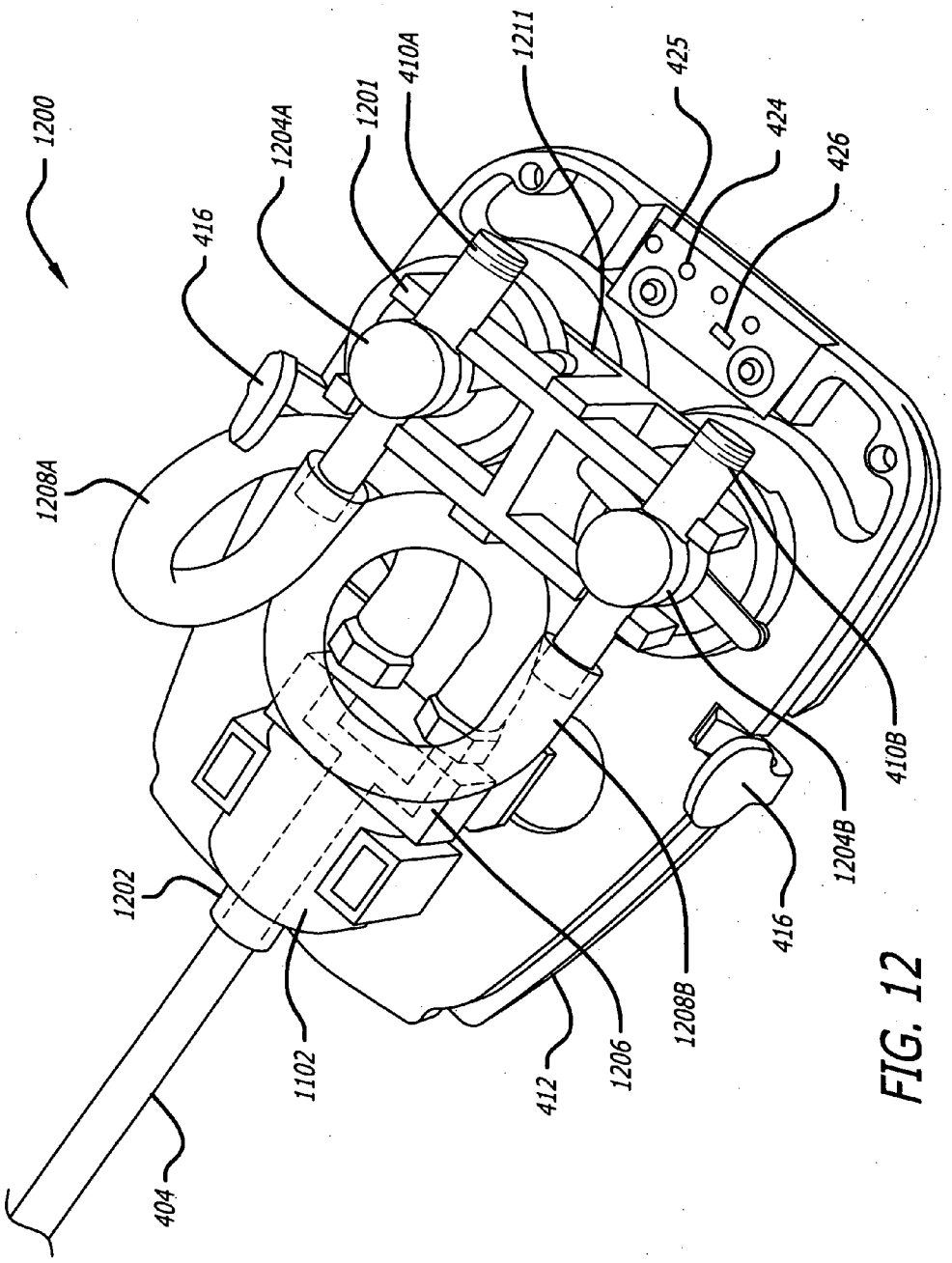
1200
1204A
1201
410A
1211
425
424
426
416
1208A
1202
1102
404
412
1206
1208B
416
1204B
410B

FIG. 12

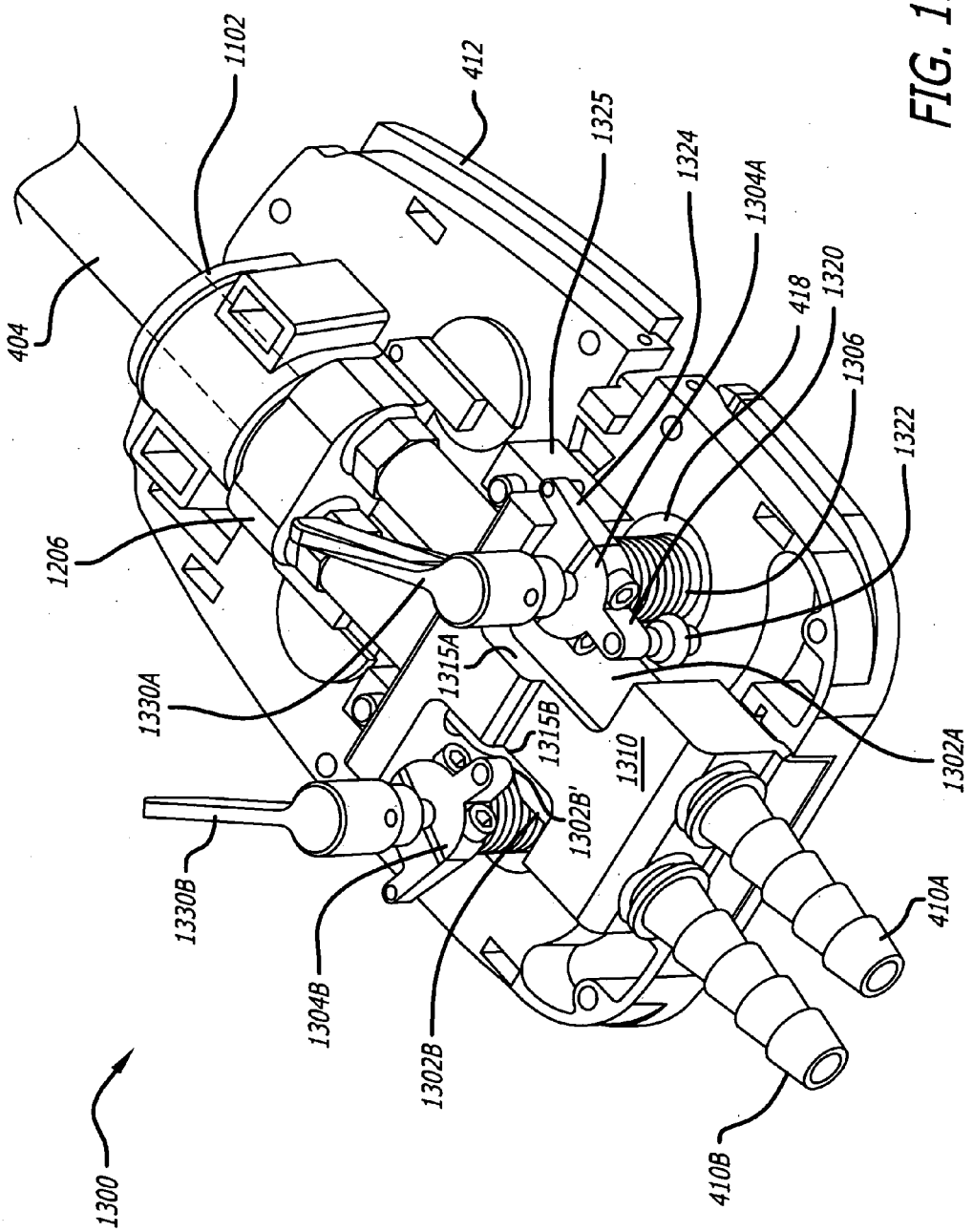
1102
412
1325
1324
1304A
418
1320
1306
1322
404
1206
1330A
1315A
1315B
1310
1302A
1330B
1302B'
1304B
1302B
410A
410B
1300

FIG. 13A

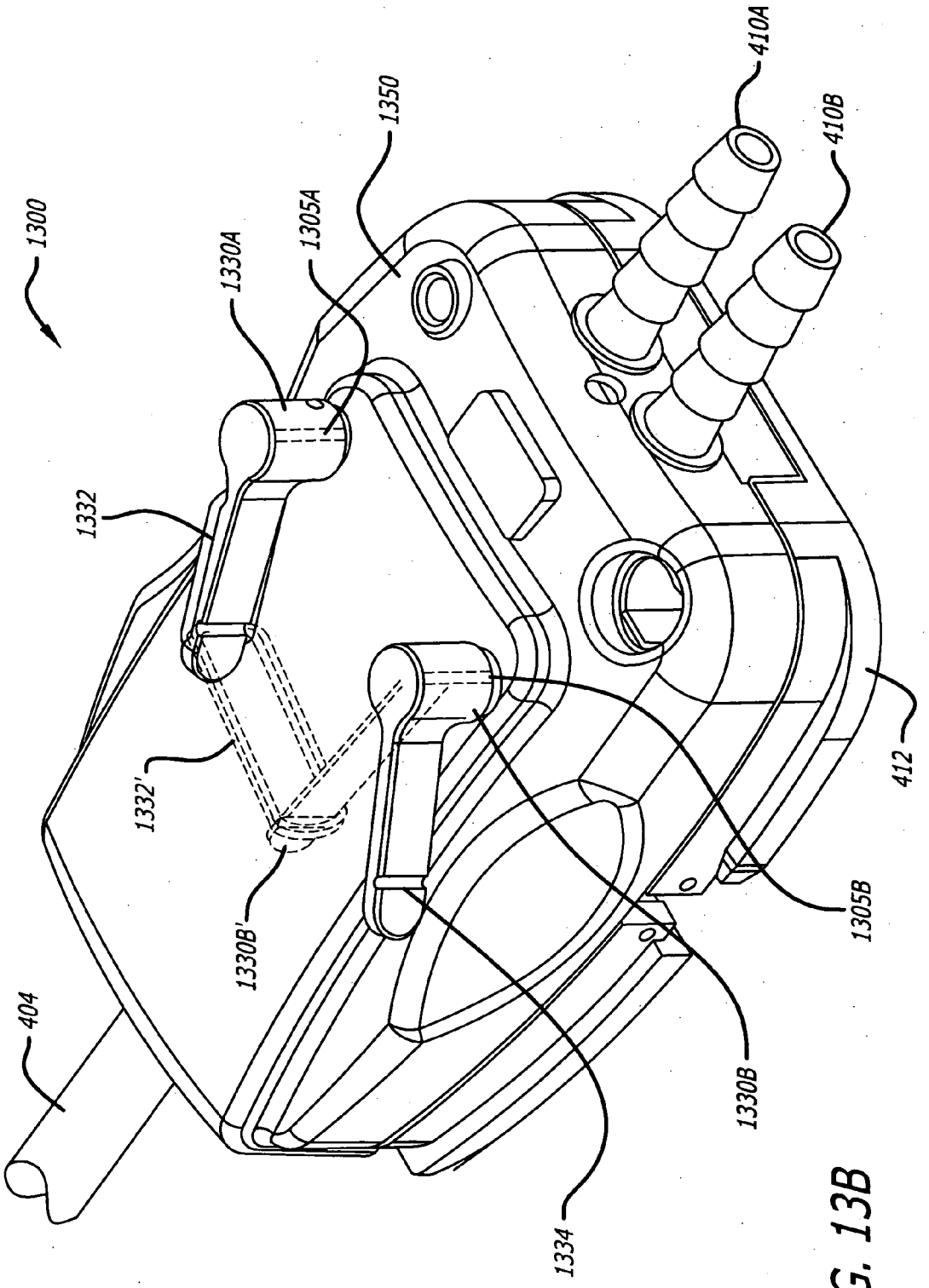
1300
1330A
1305A
1350
410A
410B
1332
1332'
1330B'
404
412
1305B
1330B
1334

FIG. 13B

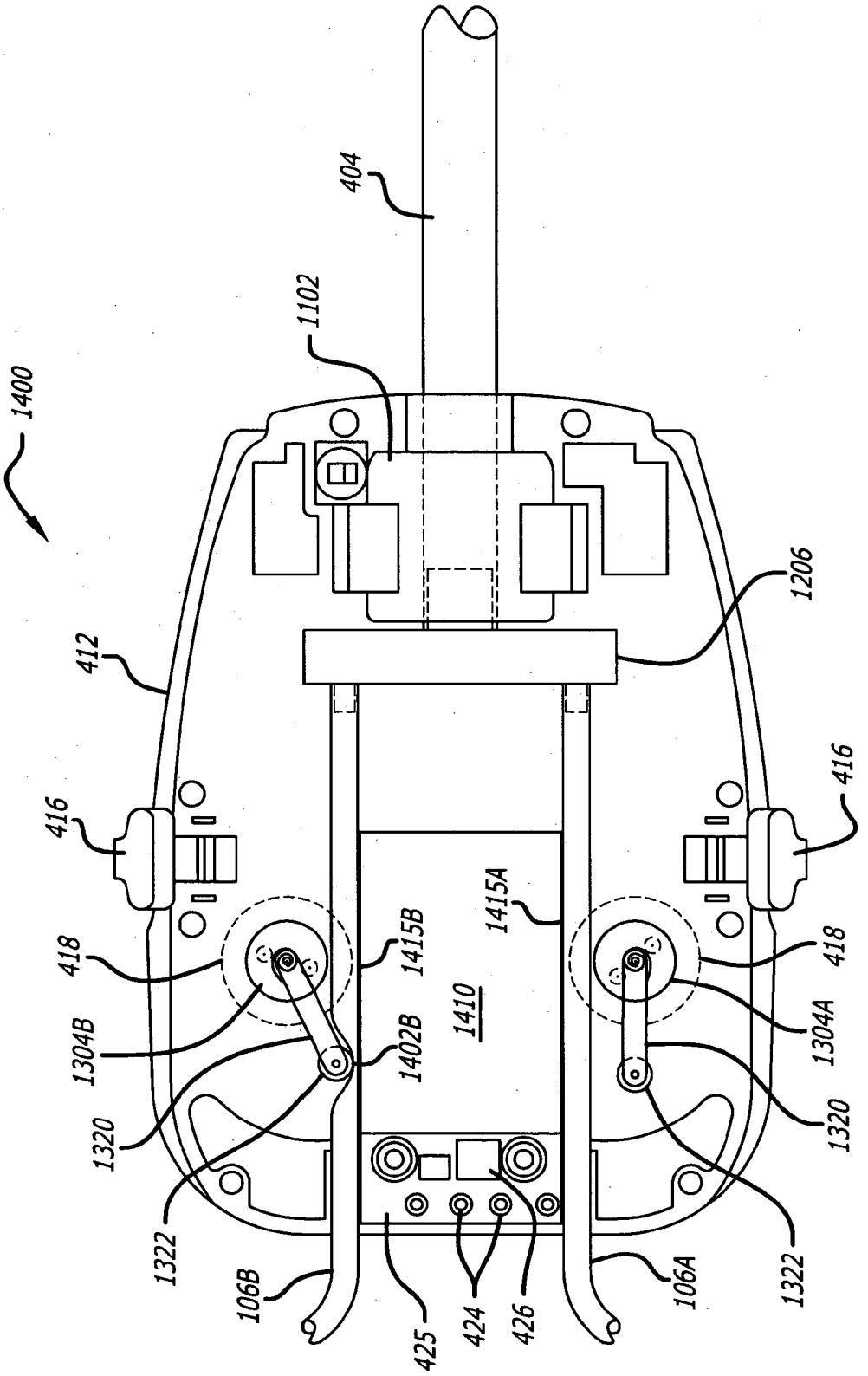
1400
404
1102
1206
412
416
416
418
418
1415B
1415A
1410
1304B
1402B
1304A
1320
1320
1322
1322
106B
106A
425
424
426

FIG. 14

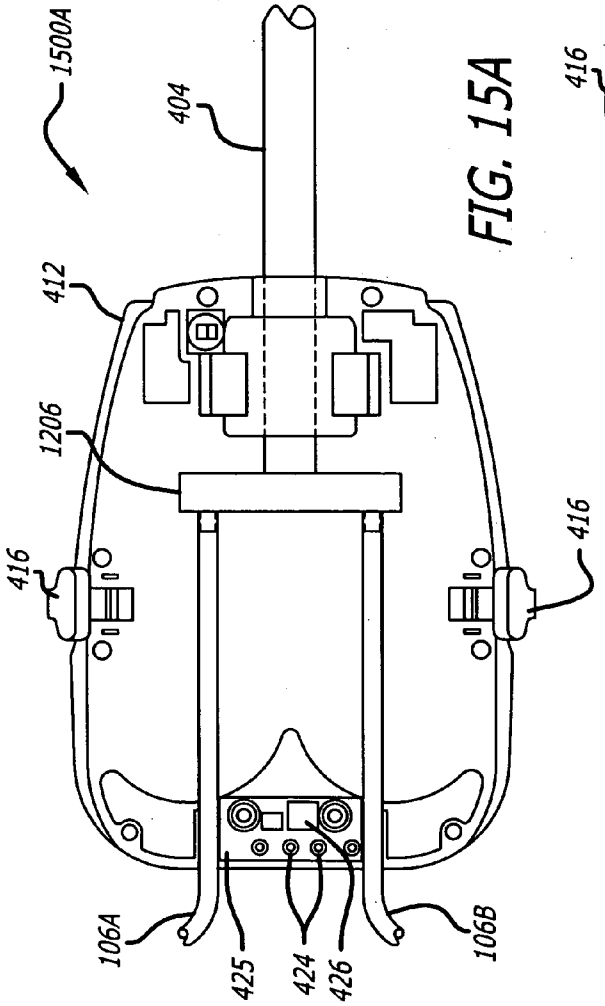

FIG. 15A

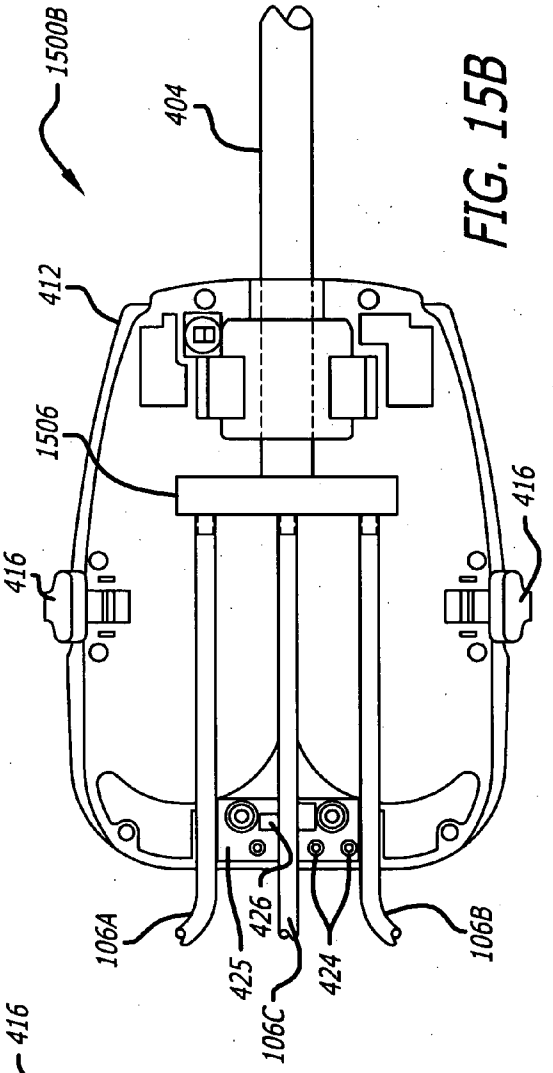

FIG. 15B

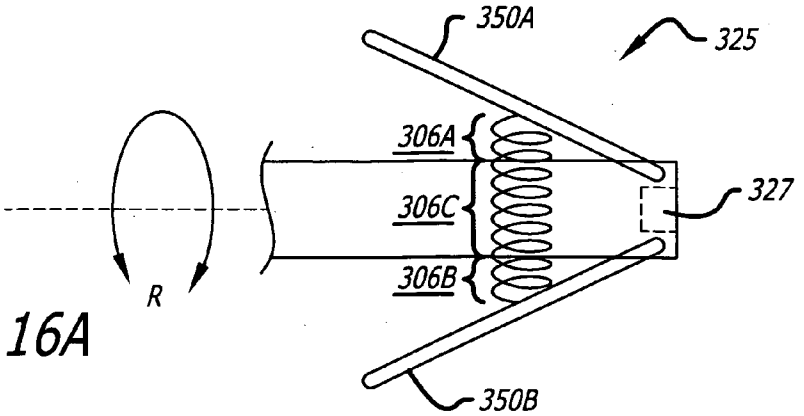

FIG. 16A

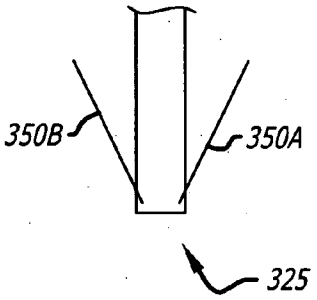

FIG. 16B

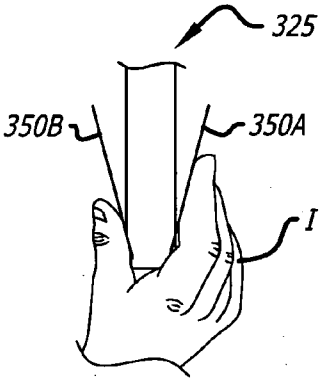

FIG. 16C

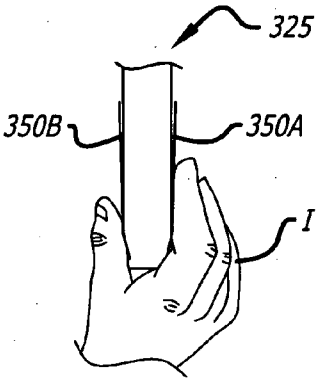

FIG. 16D

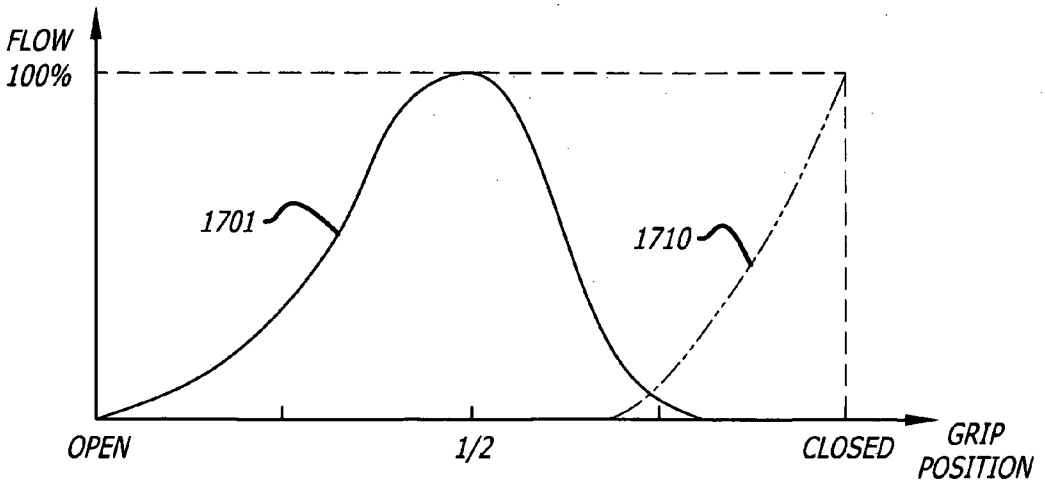

FIG. 17

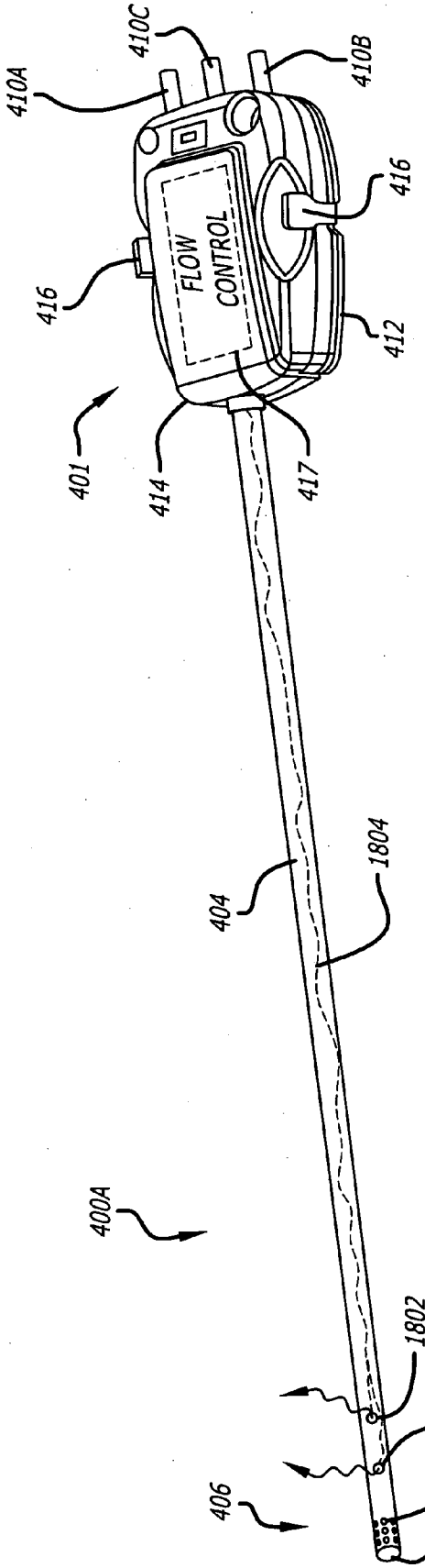
410C
410A
410B
416
FLOW CONTROL
416
412
401
414
417
404
1804
400A
1802
1801
422
406
424

FIG. 18A

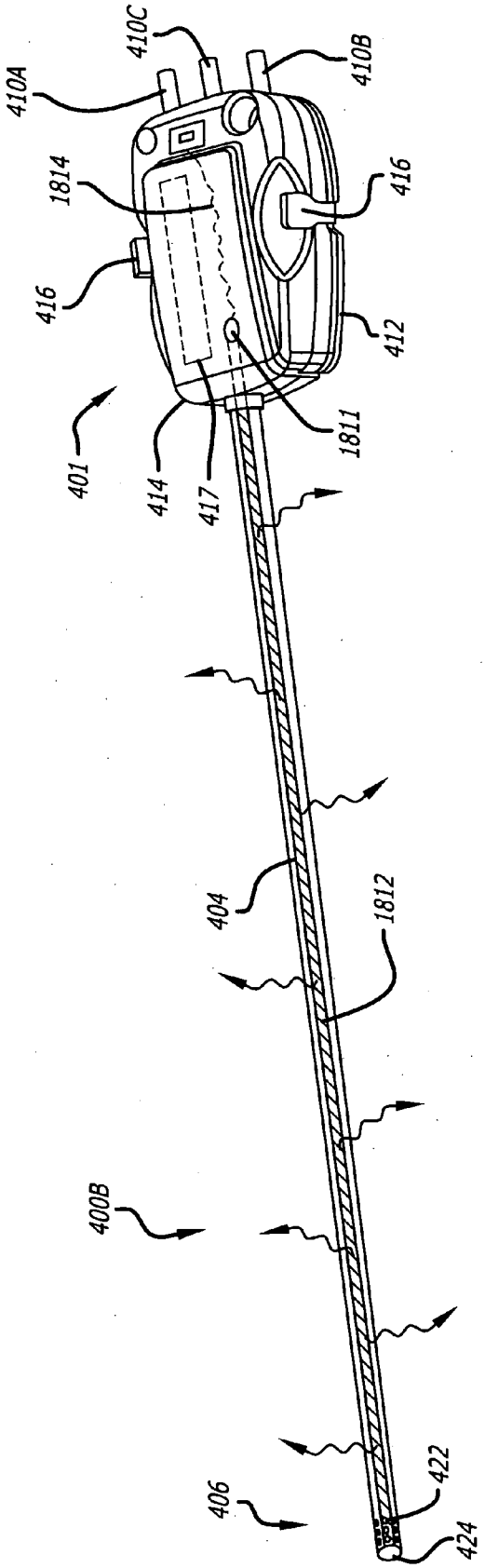
410C
410A
410B
1814
416
416
412
1811
401
414
417
404
1812
400B
406
422
424

FIG. 18B

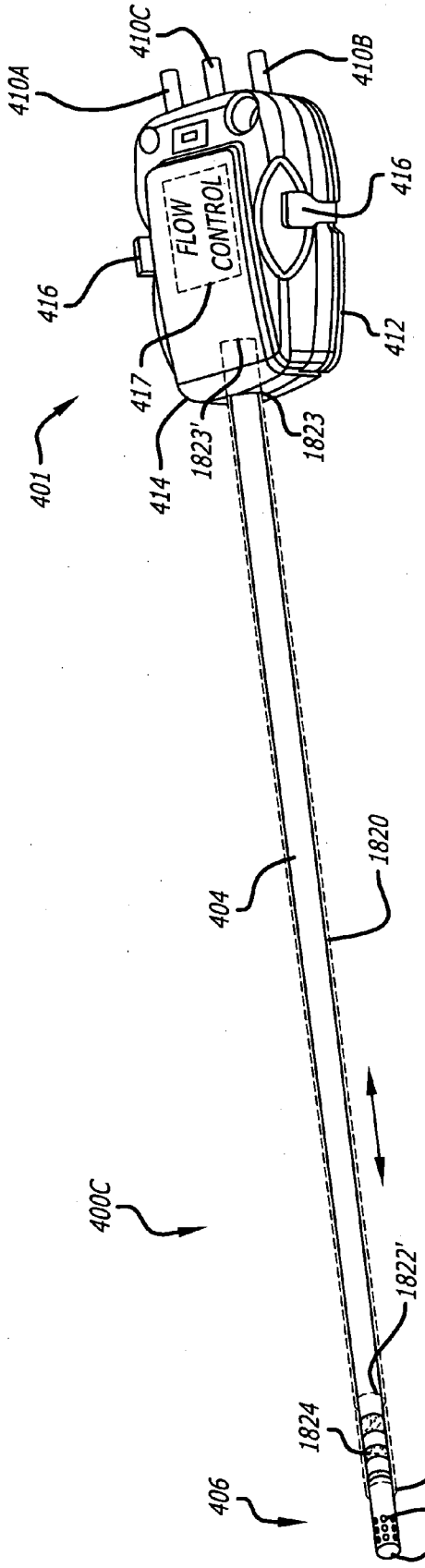
410C
410A
410B
416
FLOW CONTROL
416
412
417
401
414
1823'
1823
404
1820
400C
1822'
1824
1822
422
406
424

FIG. 18C

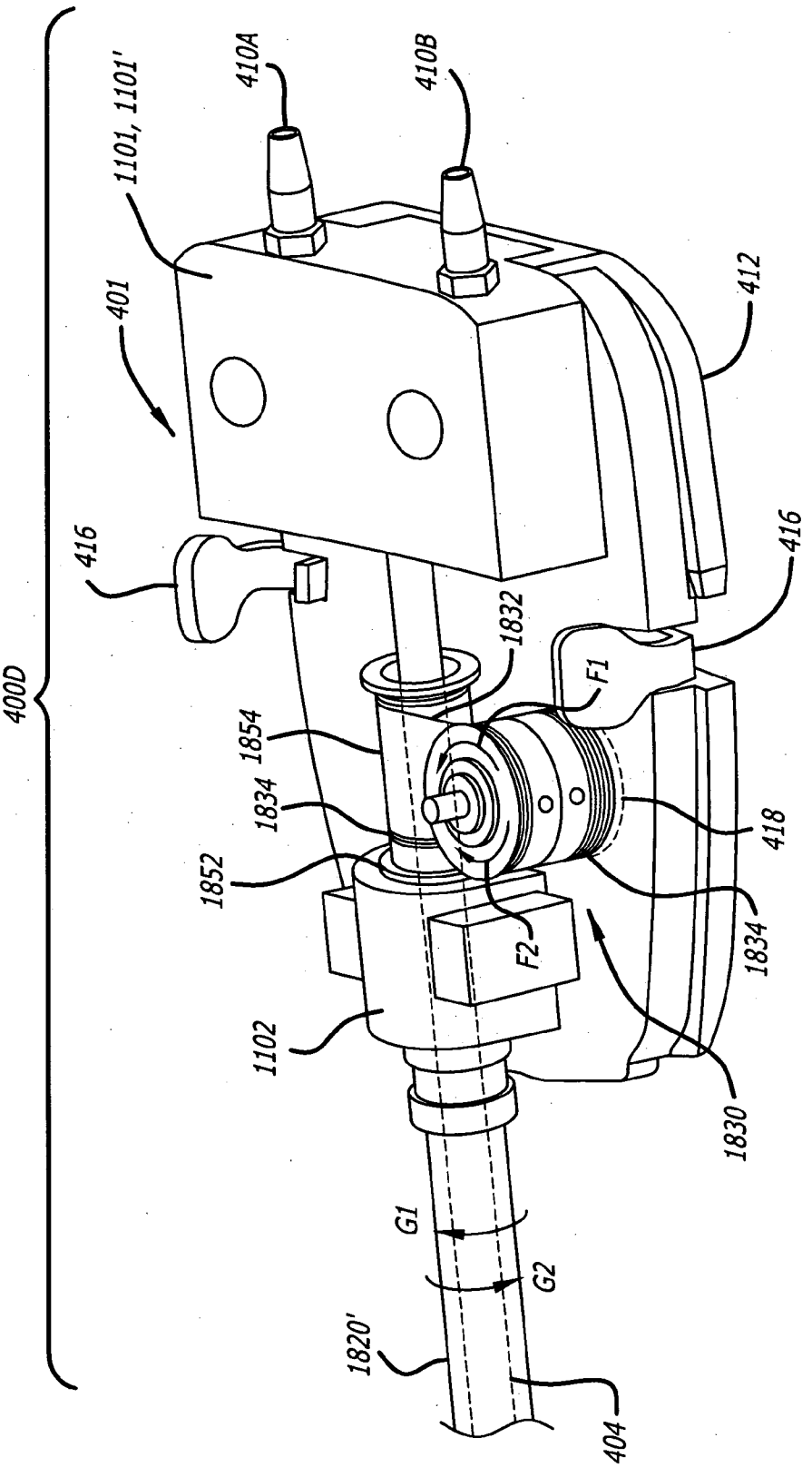
400D
1101, 1101'
410A
410B
401
412
416
416
1832
F1
1854
1834
1852
418
F2
1834
1102
1830
G1
G2
1820'
404

FIG. 18D

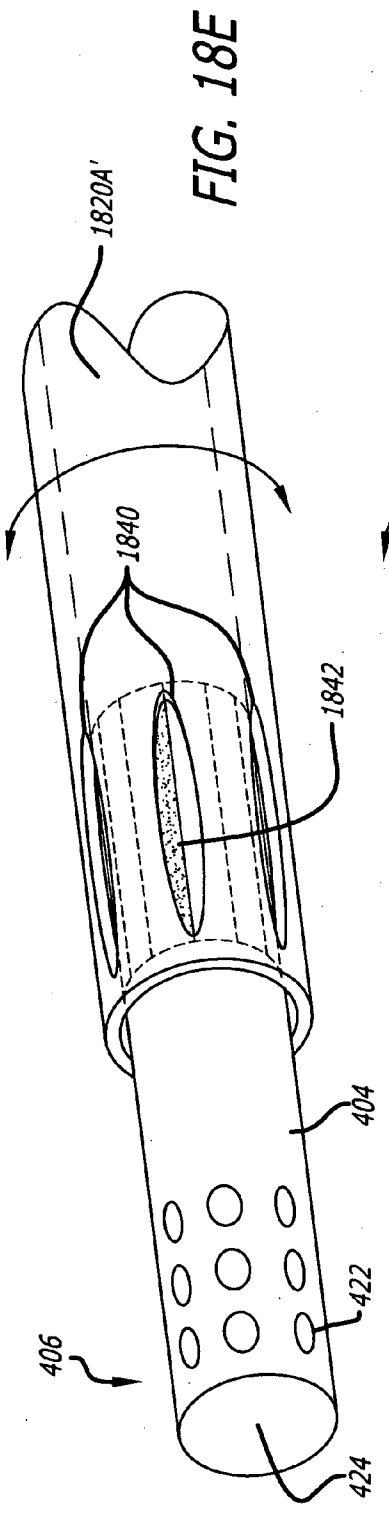

FIG. 18E

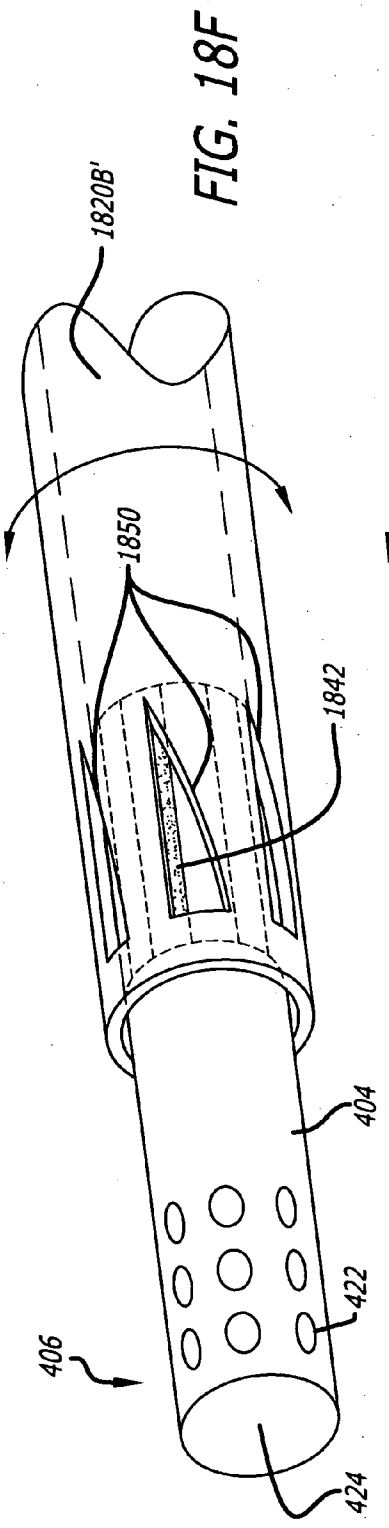

FIG. 18F

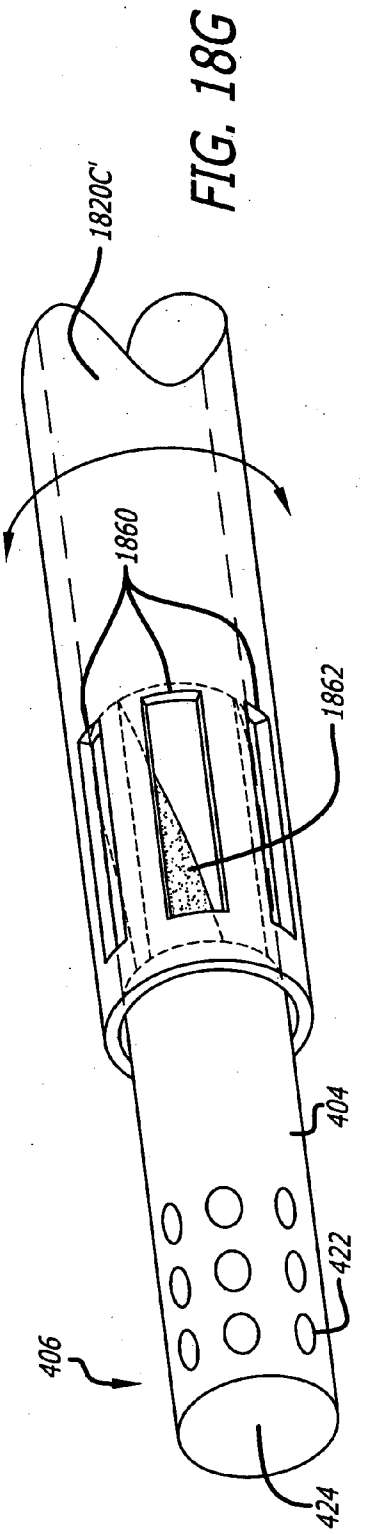

FIG. 18G

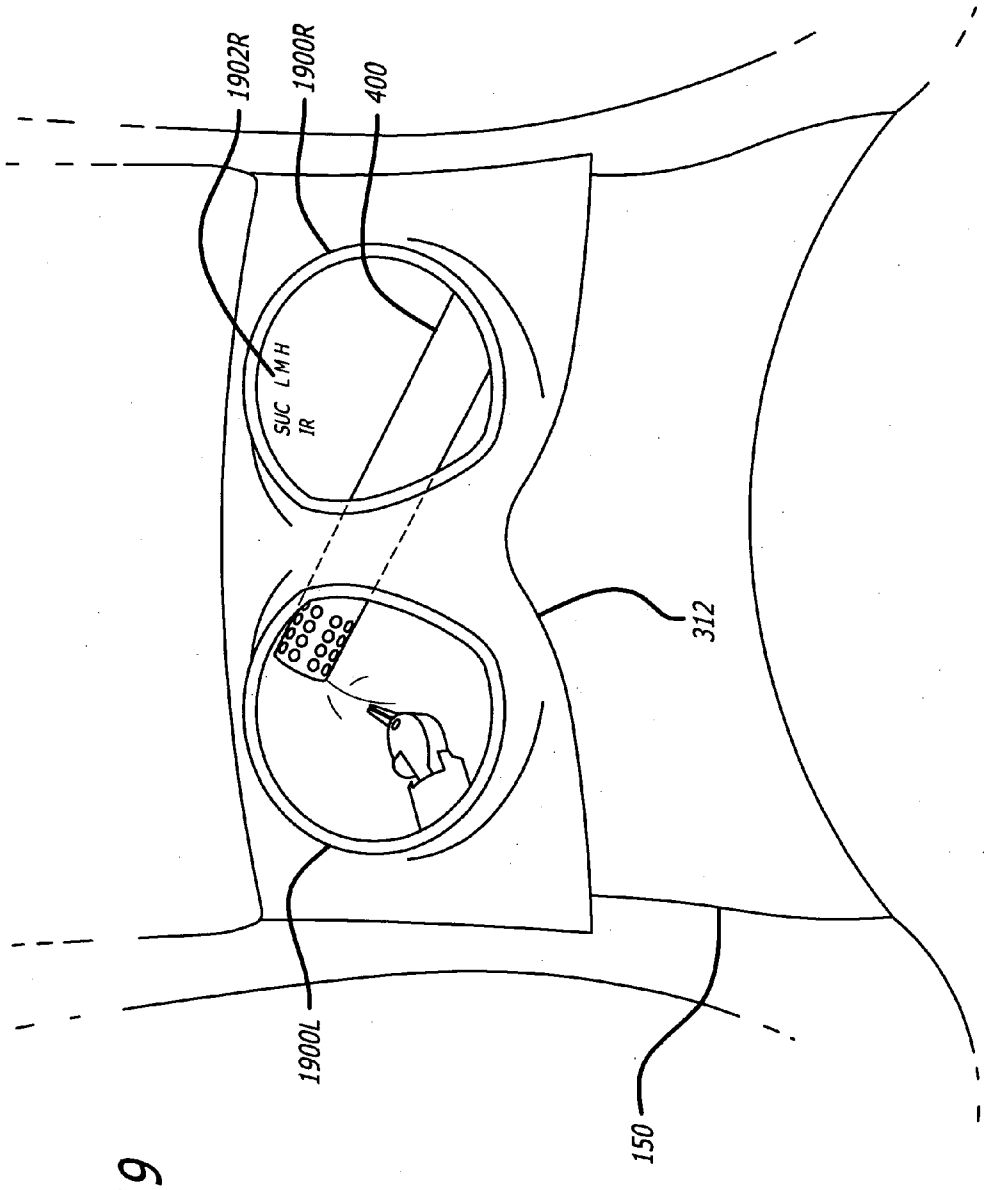

FIG. 19

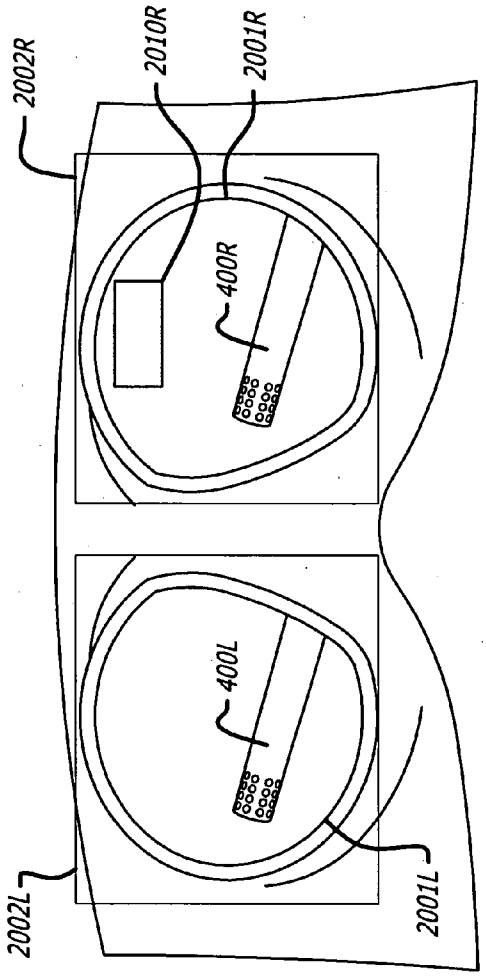

FIG. 20A

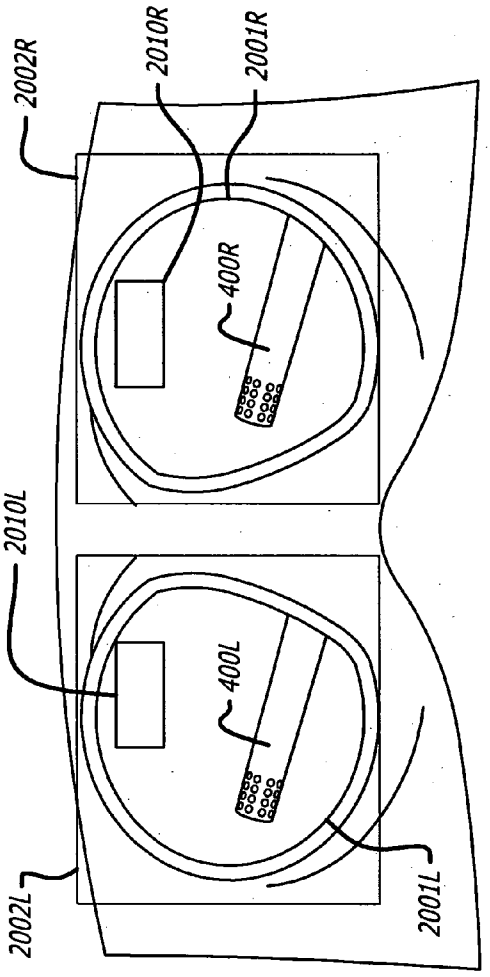

FIG. 20B

ROBOTIC SURGICAL SYSTEMS WITH FLUID FLOW CONTROL FOR IRRIGATION, ASPIRATION, AND BLOWING

CROSS-REFERENCE TO RELATED APPLICATION

[0001] This non-provisional United States (U.S.) patent application claims the benefit of U.S. provisional patent Application No. 60/696,482 entitled "IRRIGATION, ASPIRATION, AND BLOWING FOR ROBOTIC SURGERY" filed on Jun. 30, 2005 by inventors Paul Millman et al.

FIELD

[0002] The embodiments of the invention relate generally to surgical instruments for robotic surgery. More particularly, the embodiments of the invention relate to irrigation/aspiration/blowing devices for surgery.

BACKGROUND

[0003] During surgery on a patient, it is often desirable to irrigate a surgical site with a fluid, such as water, to clean or clear away blood, tissue, or other items obscuring the vision of a surgeon in the surgical site. Suction or aspiration in the surgical site may also be used to vacuum away blood, tissue, or other items obscuring the vision of the surgeon in the surgical site.

[0004] Hand held surgical instruments have typically been used to provide irrigation and/or aspiration. The surgeon typically does not operate the hand held surgical instrument that provides irrigation and/or aspiration. An assistant surgeon or nurse handling such instruments may provide irrigation and/or aspiration of the surgical site. The surgeon gives verbal instructions to the assistant surgeon or nurse to provide irrigation and/or aspiration of the surgical site. If the surgeon could both control the surgical instruments and the irrigation and aspiration of the surgical site, verbal instructions could be reduced and surgical procedures may be more efficient.

BRIEF SUMMARY

[0005] The embodiments of the invention are summarized by the claims that follow below.

BRIEF DESCRIPTIONS OF THE DRAWINGS

[0006] FIG. **1** is a block diagram of a robotic surgery system to perform minimally invasive robotic surgical procedures using an irrigation/aspiration/blowing robotic surgical tool.

[0007] FIG. **2**A is a perspective view of a robotic surgical manipulator with a plurality of robotic surgical arms at least one of which includes an irrigation/aspiration/blowing robotic surgical tool.

[0008] FIG. **2**B is a perspective view of the robotic surgical arm including the irrigation/aspiration/blowing robotic surgical tool mounted thereto.

[0009] FIG. **2**C illustrates mounting of the irrigation/aspiration/blowing robotic surgical tool to an adapter of the robotic surgical arm of FIG. **2**B.

[0010] FIG. **2**D illustrates a top view of the adapter of the robotic surgical arm of FIG. **2**C to which the irrigation/aspiration/blowing robotic surgical tool may be mounted.

[0011] FIG. **3**A is a perspective view of a robotic surgical master control console.

[0012] FIG. **3**B is a perspective view of an exemplary gimbaled device pivotally supporting a touch sensitive handle for the robotic surgical master control console of FIG. **3**A to control robotic surgical tools including an irrigation/aspiration/blowing robotic surgical tool.

[0013] FIG. **3**C is a cross-sectional view schematically illustrating mounting of the touch sensitive handle of FIG. **3**B with sensors to sense gripping and rotation of the handle to control robotic surgical tools, including an irrigation/aspiration/blowing robotic surgical tool.

[0014] FIG. **4**A is a perspective view of an irrigation/aspiration/blowing robotic surgical tool.

[0015] FIG. **4**B is a back side view of a portion of the irrigation/aspiration/blowing robotic surgical tool of FIG. **4**A.

[0016] FIG. **5**A is a schematic flow diagram of an irrigation/aspiration robotic surgical tool using two-way two-position valves.

[0017] FIG. **5**B is a schematic flow diagram of an irrigation/aspiration robotic surgical tool using a three-way three-position valve.

[0018] FIG. **5**C is a schematic flow diagram of an irrigation/aspiration/blowing robotic surgical tool using a four-way four-position valve.

[0019] FIG. **5**D is a schematic flow diagram of an irrigation/aspiration/blowing robotic surgical tool using two-way two-position valves.

[0020] FIGS. **6**A-**6**C are top views of rotationally actuated rotatable valves for use with the irrigation/aspiration/blowing robotic surgical tool and the robotic surgical arm.

[0021] FIGS. **7**A-**7**C are cross-sections of linearly actuated linear valves for use with the irrigation/aspiration/blowing robotic surgical tool and the robotic surgical arm.

[0022] FIG. **8** is a top view of exemplary linear actuation of a rotatable valve for use with the irrigation/aspiration/blowing robotic surgical tool and the robotic surgical arm.

[0023] FIG. **9**A is a top view of exemplary rotational actuation of a linear valve for use with the irrigation/aspiration/blowing robotic surgical tool and the robotic surgical arm with an optional manual push arm.

[0024] FIG. **9**B is a top view of exemplary rotational actuation of a linear valve for use with the irrigation/aspiration/blowing robotic surgical tool and the robotic surgical arm with an optional manual push side-arm.

[0025] FIG. **10**A is a top view to illustrate rotational actuation of a rotatable pinch valve for use with the irrigation/aspiration/blowing robotic surgical tool and the robotic surgical arm.

[0026] FIG. **10**B is a side view to illustrate linear actuation of a linear pinch valve for use with the irrigation/aspiration/blowing robotic surgical tool and the robotic surgical arm.

[0027] FIG. **11**A is a top perspective view of an irrigation/aspiration/blowing robotic surgical tool with cover removed to show a solid valve body.

[0028] FIG. **11**B is a bottom exploded of the irrigation/aspiration/blowing robotic surgical tool of FIG. **11**A with the solid valve body.

[0029] FIG. **11**C is a cross sectional view of the valve assembly with the solid valve body in a closed position for the irrigation/aspiration/blowing robotic surgical tool of FIG. **11**A.

[0030] FIG. **11**D is a cross sectional view of the valve assembly with the solid valve body in an open position for the irrigation/aspiration/blowing robotic surgical tool of FIG. **11**A.

[0031] FIG. **11**E is a top perspective view of an irrigation/aspiration/blowing robotic surgical tool with a solid valve body including robotically actuated valves and manually actuated valves.

[0032] FIG. **12** is a top perspective view of an irrigation/aspiration/blowing robotic surgical tool with cover removed to show the replaceable valves.

[0033] FIG. **13**A is a top perspective view of an irrigation/aspiration/blowing robotic surgical tool with cover removed to show rotatable pinch valves.

[0034] FIG. **13**B is a top perspective view of the irrigation/aspiration/blowing robotic surgical tool of FIG. **13**A with cover in place to show manual handles and a cleaning position of the handles.

[0035] FIG. **14** is a top view of an irrigation/aspiration/blowing robotic surgical tool with cover removed to show the pinch valves and replaceable tubing.

[0036] FIGS. **15**A-**15**B are top views of irrigation/aspiration/blowing robotic surgical tools with covers removed to respectively show three-way and four-way couplers and replaceable tubing coupled thereto.

[0037] FIG. **16**A is a side view of the touch sensitive handle of the diagram of the touch sensitive handle illustrated in FIG. **3**B for the robotic surgical master control console of FIG. **3**A.

[0038] FIGS. **16**B-**16**D are side views of grip positions of the touch sensitive handle to control the irrigation/aspiration/blowing robotic surgical tool in a surgical site.

[0039] FIG. **17** is a graph showing exemplary control of irrigation and aspiration using grip control of the touch sensitive handle corresponding to the side views of the touch sensitive handle illustrated in FIGS. **16**B-**16**D.

[0040] FIG. **18**A is a top perspective view of the irrigation/aspiration/blowing robotic surgical tool with light emitting diodes at the distal end to provide user feedback.

[0041] FIG. **18**B is a top perspective view of the irrigation/aspiration/blowing robotic surgical tool with a light pipe along side the flow tube that is coupled to a light emitting diode at the proximal end to provide user feedback.

[0042] FIG. **18**C is a top perspective view of the irrigation/aspiration/blowing robotic surgical tool with a sliding sleeve around the flow tube that is moved to reveal a scale at the distal end to provide user feedback by mechanical means.

[0043] FIG. **18**D is a top perspective view of the irrigation/aspiration/blowing robotic surgical tool with a rotational sleeve around the flow tube that rotates to reveal a scale at the distal end and provide user feedback by mechanical means.

[0044] FIG. **18**E is a perspective view of a first tip for the irrigation/aspiration/blowing robotic surgical tool of FIG. **18**D with a rotational sleeve around the flow tube that rotates to reveal a scale and provide user feedback.

[0045] FIG. **18**F is a perspective view of a second tip for the irrigation/aspiration/blowing robotic surgical tool of FIG. **18**D with a rotational sleeve around the flow tube that rotates to reveal a scale and provide user feedback.

[0046] FIG. **18**G is a perspective view of a third tip for the irrigation/aspiration/blowing robotic surgical tool of FIG. **18**D with a rotational sleeve around the flow tube that rotates to reveal a scale and provide user feedback.

[0047] FIG. **19** is a viewer of the robotic surgical master control console of FIG. **3**A with an icon overlaid onto the displayed images to provide user feedback as to the control of the irrigation/aspiration/blowing robotic surgical tool.

[0048] FIG. **20**A illustrates a viewer of the master control console of FIG. **3**A with an icon overlay in a single side to provide user feedback as to the control of the irrigation/aspiration/blowing robotic surgical tool.

[0049] FIG. **20**B illustrates a viewer of the master control console of FIG. **3**A with an icon overlay in both left and right sides to provide three-dimensional user feedback as to the control of the irrigation/aspiration/blowing robotic surgical tool.

DETAILED DESCRIPTION

[0050] In the following detailed description of the embodiments of the invention, numerous specific details are set forth in order to provide a thorough understanding of the embodiments of the invention. However, it will be obvious to one skilled in the art that the embodiments of the invention may be practiced without these specific details. In other instances well known methods, procedures, components, and circuits have not been described in detail so as not to unnecessarily obscure aspects of the embodiments of the invention.

[0051] The embodiments of the invention include a method, apparatus, and system for robotically controlled irrigation/aspiration/blowing of an internal or external surgical area or site where robotic surgery is being performed. Aspiration may also be referred to as suction.

[0052] In one embodiment of the invention a robotic surgical system is provided including a master control console, a surgical manipulator, a first hose, and a first pump. The master control console is used to generate control signals to cause one or more fluids to flow into or out of a surgical site. The surgical manipulator is coupled to the master control console to receive the control signals. The surgical manipulator includes at least one robotic arm to manipulate at least one robotic surgical instrument, and a surgical instrument coupled to the robotic arm. The surgical manipulator controls the surgical instrument in response to the control signals to control the flow of the one or more fluids into or out of the surgical site. The surgical instrument

has a first robotically controlled valve responsive to the surgical manipulator and a hollow tube having an opening at one end to direct the flow of one or more fluids in the surgical site. The first robotically controlled valve has a first port and a second port and the hollow tube has a first end coupled to the second port of the first robotically controlled valve. The first hose has a first end coupled to the first port of the first robotically controlled valve. The first hose transports a first fluid to the first robotically controlled valve. The first pump has a port coupled to a second end of the first hose. The first pump pumps a first fluid through the first hose to the first robotically controlled valve of the surgical instrument.

[0053] In another embodiment of the invention, a robotic surgical system is provided including a master control console, a surgical manipulator, and a first pump. The master control console generates control signals to cause a fluid to flow into or out of a surgical site. The surgical manipulator is coupled to the master control console to receive the control signals. The surgical manipulator includes at least one robotic arm to manipulate at least one surgical instrument. A surgical instrument is coupled to the robotic arm to control the flow of a fluid into or out of the surgical site. The surgical instrument has a first hose, a first robotically controlled pinch valve, and a hollow tube. The first hose is flexible and has a first end and a second end. The first robotically controlled pinch valve receives the first hose. The first robotically controlled pinch valve squeezes and pinches closed the first hose and releases and opens the first hose. The hollow tube has a first end to couple to the first end of the first hose. The first pump has a port coupled to the second end of the first hose.

[0054] In another embodiment of the invention, a method is provided. The method includes generating a first control signal to control a robotic surgical instrument; coupling the first control signal into the robotic surgical instrument; and opening a first valve in the robotic surgical instrument to flow a first fluid over a surgical site in response to the first control signal.

[0055] In another embodiment of the invention, another method is provided. The method includes mounting an irrigation-aspiration robotic surgical instrument to a robotic arm of a robotic surgical manipulator; coupling at least one hose from the irrigation-aspiration robotic surgical instrument to at least one pump; inserting a tip of a hollow tube of the irrigation-aspiration robotic surgical instrument into a patient near a surgical site; controlling a flow of a fluid between the surgical site and the irrigation-aspiration robotic surgical instrument; and monitoring a level of the flow of the fluid between the surgical site and the irrigation-aspiration robotic surgical instrument.

[0056] In yet another embodiment of the invention, a robotic surgical instrument is provided for the control of flows of one or more fluids into and out of a surgical site. The robotic surgical instrument includes a housing, a flow control system mounted in the housing, a hollow tube having a first end mounted in the housing, and one or more hose fittings having a first end coupled to the flow control system. The housing can couple the robotic surgical instrument to a robotic arm. The flow control system includes one or more controlled valves to control the flow of one or more fluids through the robotic surgical instrument. The first end of the hollow tube couples to the flow control system. The one or more hose fittings have a second end to respectively couple to one or more hoses.

[0057] In still another embodiment of the invention, another robotic surgical instrument is provided for the control of flows of one or more fluids into and out of a surgical site.

[0058] The robotic surgical instrument includes an interface base, a hollow tube having a proximal end mounted to the interface base, a three-way coupler having a first port coupled to the proximal end of the hollow tube, a first robotically controlled valve coupled to the interface base, and a second robotically controlled valve coupled to the interface base. The interface base can mechanically and electrically couple to an end of a robotic arm. The hollow tube further has a distal end for placement in a surgical site to allow the flow of fluids into and out of a surgical site. The three-way coupler further has a second port and a third port to couple the first port, the second port, and the third port together to flow fluids there-between. The first robotically controlled valve having a first port to couple to a first hose and a second port coupled to the second port of the three-way coupler. The first robotically controlled valve controls the flows of a first fluid. The second robotically controlled valve having a first port to couple to a second hose and a second port coupled to the third port of the three-way coupler. The second robotically controlled valve controls the flows of a second fluid.

[0059] Robotic surgery generally involves the use of a robot manipulator that has multiple robotic manipulator arms. One or more of the robotic manipulator arms often support a surgical tool which may be articulated (such as jaws, scissors, graspers, needle holders, micro dissectors, staple appliers, tackers, suction/irrigation tools, clip appliers, or the like) or non-articulated (such as cutting blades, cautery probes, irrigators, catheters, suction orifices, or the like). One or more of the robotic manipulator arms are often used to support a surgical image capture device such as an endoscope (which may be any of a variety of structures such as a laparoscope, an arthroscope, a hysteroscope, or the like), or, optionally, some other imaging modality (such as ultrasound, fluoroscopy, magnetic resonance imaging, or the like). Typically, the arms will support at least two surgical tools corresponding to the two hands of a surgeon and one image capture device.

[0060] Robotic surgery may be used to perform a wide variety of surgical procedures, including but not limited to open surgery, neurosurgical procedures (such as stereotaxy), endoscopic procedures (such as laparoscopy, arthroscopy, thoracoscopy), and the like.

Robotic Surgical System

[0061] Referring now to FIG. **1**, a block diagram of a robotic surgery system **100** is illustrated to perform minimally invasive robotic surgical procedures using an irrigation/aspiration/blowing (IAB) robotic surgical tool **101**A. The irrigation/aspiration/blowing robotic surgical tool **101**A is a robotic endoscopic surgical instrument that is manipulated by a slaved robotic manipulator and remotely controlled by control signals received from a master control console. In contrast, manual endoscopic surgical instruments are directly controlled by hand.

[0062] A user or operator O (generally a surgeon) performs a minimally invasive surgical procedure on patient P by manipulating input devices at a master control console **150**. A computer **151** of the console **150** directs movement of robotically controlled endoscopic surgical instruments (generally numbered **101**), effecting movement of the instruments using a robotic surgical manipulator **152**. The robotic surgical manipulator **152** may also be referred to as robotic patient-side cart system or simply as a cart. The robotic surgical manipulator **152** has one or more robotic arms **153**. Typically, the robotic surgical manipulator **152** includes at least three robotic manipulator arms **153** supported by linkages, with a central arm supporting an endoscopic camera and the robotic arms **153** to left and right of center supporting tissue manipulation tools and the irrigation/aspiration/blowing robotic surgical tool **101**A such as the robotic manipulator arm **153**C.

[0063] An assistant A may assist in pre-positioning of the robotic surgical manipulator **152** relative to patient P as well as swapping tools or instruments **101** for alternative tool structures, and the like, while viewing the internal surgical site via an assistant's display **154**. The image of the internal surgical site shown to A by the assistant's display **154** and operator O by surgeon's console **150** is provided by one of the surgical instruments **101** supported by the robotic surgical manipulator **152**.

[0064] Generally, the robotic arms **153** of robotic surgical manipulator **152** include a positioning portion and a driven portion. The positioning portion of the robotic surgical manipulator **152** remains in a fixed configuration during surgery while manipulating tissue. The driven portion of the robotic surgical manipulator **152** is actively articulated under the direction of the operator O generating control signals at the surgeon's console **150** during surgery. The actively driven portion of the arms **153** is herein referred to as an end effector **158**. The positioning portion of the robotic arms **153** that are in a fixed configuration during surgery may be referred to as positioning linkage and/or "set-up joint"**56**, **56'**.

[0065] To support the irrigation/aspiration/blowing robotic surgical tool **101**A, the robotic surgical system may further include one or more pumps **102**A-**102**C, one or more inline filters **104**A-**104**C, and one or more hoses **106**A-**106**C. For irrigation, the pump **102**A is a sterile fluid pump and may be an intravenous (IV) pump with an input port or inlet coupled to an IV bag **108** through a hose **106**D. The output port or outlet of the pump **102**A may couple to the robotic surgical instrument **101**A directly or through the inline filter **104**A. The IV bag **108** may have a pressure cuff. For aspiration, the pump **102**B is a vacuum pump **102**B with an output port **110** exhausting to atmosphere and an input port coupling to a suction canister **105** through the inline filter **104**B. In an alternate embodiment of the invention, suction may be provided to rooms at a wall inlet to isolate the noise of the vacuum pump **102**B. For blowing, the pump **102**C is a gas compressor with an input port coupled to a source of gas **111**, such as oxygen or air, and an output port coupled to the instrument **101**A through the inline filter **104**C.

[0066] The one or more hoses **106**A-**106**C may be joined together along a portion of their length and into one end to couple to the instrument **101**A for ease of coupling and to readily manage a plurality of hoses as one unit at the robotic manipulator **152**. Towards the opposite end, the one or more hoses **106**A-**106**C may separate to couple to the inline filters, the pumps, the canister **105**, or other pipe fittings as the case may be.

[0067] In one embodiment of the invention, the master control console **150** may control the one or more pumps **102**A-**102**C and any valves thereat in order to control fluid flow between the pumps and the instrument **101**A into and out of the surgical site. One or more control signal lines **109**A-**109**C may couple between the computer **151** and the one or more pumps **102**A-**102**C and any valves thereat in order that they may be controlled by control signals from the master control console **150**. In which case, the hoses **106**A-**106**C may simply couple to a coupler within the instrument **101**A as is discussed further below with reference to FIGS. **15**A-**15**B.

[0068] Referring now to FIG. **2**A, a perspective view of the robotic surgical manipulator **152** is illustrated. The robotic surgical manipulator **152** has one or more robotic surgical arms **153**. The robotic arm **153**C includes an irrigation/aspiration/blowing robotic surgical tool **101**A coupled thereto at the end effector **158**. The robotic surgical manipulator **152** further includes a base **202** from which the robotic surgical instruments **101** may be supported. More specifically, the robotic surgical instruments **101** are each supported by the positioning linkage **156** and the end effector **158** of the arms **153**. It should be noted that these linkage structures are here illustrated with protective covers **206**,**208** extending over much of the robotic arms. It should be understood that these protective covers **206**,**208** are optional, and may be limited in size or entirely eliminated in some embodiments to minimize the inertia that is manipulated by the servomechanism, and to limit the overall weight of robotic surgical manipulator **152**.

[0069] The robotic surgical manipulator **152** generally has dimensions suitable for transporting between operating rooms. It typically can fit through standard operating room doors and onto standard hospital elevators. The robotic surgical manipulator **152** may have a weight and a wheel (or other transportation) system that allows the cart to be positioned adjacent an operating table by a single attendant. The robotic surgical manipulator **152** may be sufficient stable during transport to avoid tipping, and to easily withstand overturning moments that may be imposed at the ends of the robotic arms during use.

[0070] Referring now to FIG. **2**B, a perspective view of the robotic surgical arm **153**C is illustrated including the irrigation/aspiration/blowing robotic surgical tool **101**A mounted thereto. Each of the robotic manipulating arms **153** preferably includes a linkage **212** that constrains the movement of the surgical tool **101** mounted thereto. More specifically, linkage **212** includes rigid links coupled together by rotational joints in a parallelogram arrangement so that the robotic surgical tool **101**A rotates around a point **215** in space. At the point **215**, the robotic arm can pivot the robotic surgical tool **101**A about a pitch axis **215**A and a yaw axis **215**B. The pitch and yaw axes intersect at the point **215**, which is aligned along a shaft **216** of robotic surgical tool **101**A. In the case of the IAB robotic surgical tool **101**A, the shaft is a hollow tube as is further discussed below.

[0071] The robotic arm provides further degrees of freedom of movement to the robotic surgical tool **101**A. Along

an insertion axis **215**C, parallel to the central axis of the shaft **216** of the robotic surgical tool **101**A, the robotic surgical tool **101**A may slide into and out from a surgical site. The robotic surgical tool **101**A can also rotate about the insertion axis **215**C. As the robotic surgical tool **101**A slides along or rotates about the insertion axis **215**C, the center point **215** is relatively fixed with respect to the base **218**. That is, the entire robotic arm is generally moved in order to maintain or re-position back to the center point **215**.

[**0072**] The linkage **212** of the robotic arm **153** is driven by a series of motors **217** therein in response to commands from a processor or computer. The motors **217** in the robotic arm are also used to rotate and/or pivot the robotic surgical tool **101**A at the point **215** around the axes **215**A-**215**C. If a robotic surgical tool **101** further has end effectors to be articulated or actuated, still other motors **217** in the robotic arm may be used to do so. A flow control system in the IAB robotic surgical tool **101**A may be actuated by these other motors in the robotic arm **153**. However, alternative means may also be used to actuate or control the flow control system in the IAB robotic surgical tool **101**A. Additionally, the motion provided by the motors **217** may be mechanically transferred to a different location such as by using pulleys, cables, gears, links, cams, cam followers, and the like or other known means of transfer, such as pneumatics, hydraulics, or electronics.

[**0073**] For endoscopic surgical procedures, the end effector **158** of the robotic arm **153** is often fitted with a hollow cannula **219**. The shaft or tube of the robotic surgical tool **101** may be inserted into the hollow cannula **219**. The cannula **219**, which may be releasably coupled to the robotic arm **153**, supports the shaft or tube of the robotic surgical tool **101**, preferably allowing the tool to rotate around the axis **215**C and move axially through the central bore of the cannula along the axis **215**C.

[**0074**] The robotic surgical tools **101** are generally sterile structures, often being sterilizable and/or being provided in hermetically sealed packages for use. As the robotic surgical tools **101** will be removed and replaced repeatedly during many procedures, a tool holder could potentially be exposed to contamination if the interface directly engages the tool holder. To avoid contamination to a tool holder and possible cross contamination between patients, an adaptor for coupling to robotic surgical tools **101** is provided in a robotic arm of the robotic surgical manipulator.

[**0075**] Referring now to FIGS. **2**C, **2**D, and **4**B, the mounting of the irrigation/aspiration/blowing robotic surgical tool **101**A to an adapter **228** of the robotic surgical arm is now briefly described.

[**0076**] The robotic surgical arm **153** may include an adapter **228** to which the IAB robotic surgical tool **101**A or other surgical tool **101** may be mounted. FIG. **2**D illustrates a front side of an exemplary adapter **228**. The front side of the adaptor **128** is generally referred to as a tool side **230** and the opposite side is generally referred to as a holder side (not shown).

[**0077**] FIG. **4**B illustrates a back side of an exemplary IAB robotic surgical tool **400** as the IAB surgical robotic tool **101**A. The robotic surgical tool **400** includes an exemplary mountable housing **401** including an interface base **412** that can be coupled to the adapter **228**. The interface base **412** and the adapter **228** may be electrically and mechanically coupled together to actuate the flow control system of the IAB robotic surgical tool **101**A. Rotatably coupled to the interface base **412** are one or more rotatable receiving members **418**. Each of the one or more rotatable receiving members **418** includes a pair of pins **422**A and **422**B generally referred to as pins **422**. Pin **422**A is located closer to the center of each rotatable receive member **418** than pin **422**B. The one or more rotatable receiving members **418** can mechanically couple respectively to one or more rotatable drivers **234** of the adapter **228**. The robotic surgical tool **101**A may further include release levers **416** to release it from the adapter **228**.

[**0078**] The interface base **412** may further include one or more electrical contacts or pins **424** to electrically couple to electrical connector **242** of the adapter **228**. The interface base **412** may further include a printed circuit board **425** and one or more integrated circuits **426** coupled thereto and to the one or more pins **424**. The one or more integrated circuits **426** may be used to identify the type of robotic surgical tool coupled to the robotic arm, so that it may be properly controlled by the master control console **150**.

[**0079**] The adapter **228** includes one or more rotatable drivers **234** rotatably coupled to a floating plate **236**. The rotatable drivers **234** are resiliently mounted to the floating plate **236** by resilient radial members which extend into a circumferential indentation about the rotatable drivers. The rotatable drivers **234** can move axially relative to floating plate **236** by deflection of these resilient structures.

[**0080**] The floating plate **236** has a limited range of movement relative to the surrounding adaptor structure normal to the major surfaces of the adaptor. Axial movement of the floating plate helps decouple the rotatable drivers **234** from a robotic surgical tool **101** when its release levers **416** are actuated.

[**0081**] The one or more rotatable drivers **234** of the adapter **228** may mechanically couple to a part of the surgical tools **101**. Each of the rotatable drivers **234** may include one or more openings **240** to receive protrusions or pins **422** of rotatable receiving members **418** of the robotic surgical tools **101**. The openings **240** in the rotatable drivers **234** are configured to accurately align with the rotatable receiving elements **418** of the surgical tools **101**.

[**0082**] The inner pins **422**A and the outer pins **422**B of the rotatable receiving elements **418** respectively align with the opening **240**A and the opening **240**B in each rotatable driver. The pins **422**A and openings **240**A are at differing distances from the axis of rotation than the pins **422**B and openings **240**B so as to ensure that rotatable drivers **234** and the rotatable receiving elements **418** are not aligned 180 degrees out of phase from their intended position. Additionally, each of the openings **240** in the rotatable drivers may be slightly radially elongated so as to fittingly receive the pins in the circumferential orientation. This allows the pins **422** to slide radially within the openings **240** and accommodate some axial misalignment between the tool and the adapter **228**, while minimizing any angular misalignment and backlash between the rotatable drivers **234** and the rotatable receiving elements **418**. Additionally, the interaction between pins **422** and openings **240** helps restrain the robotic surgical tool **101** in the engaged position with the adapter **228** until the release

levers **416** along the sides of the housing **401** push on the floating plate **236** axially from the interface so as to release the tool **101**.

[**0083**] When disposed in a first axial position (away from the tool side **230**) the rotatable drivers are free to rotate without angular limitation. The one or more rotatable drivers **234** may rotate clockwise or counter-clockwise to further actuate the systems and tools of the robotic surgical instruments **101**. However, as the rotatable drivers move axially toward the tool side **230**, tabs (extending radially from the rotatable drivers) may laterally engage detents on the floating plates so as to limit the angular rotation of the rotatable drivers about their axes. This limited rotation can be used to help engage the rotatable drivers the rotating members of the tool as the pins **422** may push the rotatable bodies into the limited rotation position until the pins are aligned with (and slide into) the openings **140** in the rotatable drivers.

[**0084**] While rotatable drivers **234** are described here, other types of drivers or actuators may be provided in the adapter **228** to actuate systems or tools of the robotic surgical instruments **101**. The adapter **228** further includes an electrical connector **242** to electrically couple to surgical instruments **101**.

[**0085**] The mounting of robotic surgical tool **101**A to the adapter **228** generally includes inserting the tip or distal end of the shaft or hollow tube of the robotic surgical tool through the cannula **219** and sliding the interface base **412** into engagement with the adapter **228**, as illustrated in FIG. **2**C. A lip **232** on the tool side **130** of the adaptor **128** slidably receives the laterally extending portions of the interface base **412** of the robotic surgical tool. A catch **244** of adapter **228** may latch onto the back end of the interface base **412** to hold the tool **101**A in position. The protrusions or pins **422** extending from the one or more rotatable members **418** of the robotic surgical tool couple into the holes **240** in the rotatable drivers **234** of the adapter **228**.

[**0086**] The range of motion of the rotatable receiving elements **418** in the robotic surgical tool may be limited. To complete the mechanical coupling between the rotatable drivers of the adapter and the rotatable receiving elements **418**, the operator O at the surgical master control console **150** may turn the rotatable drivers in one direction from center, turn the rotatable drivers in a second direction opposite the first, and then return the rotatable drivers to center. Further, to ensure that the pins **422** enter openings **240** of adapter **228**, the adapter **228** and tool **101**A mounted thereto may be moved along the axis **215**C. The adapter **228** and tool **101**A mounted thereto may be moved to an initial position so that the tip or distal end of the shaft or hollow tube is disposed within the cannula **219**.

[**0087**] To dismount and remove the robotic surgical tool **101**A, the release levers **416** may be squeezed pushing out on the mountable housing **401** to release the pins **422** from the holes **240** and the catch **244** from the back end of the interface base. The mountable housing **401** is then pulled up to slide the interface base **412** up and out from the adapter **228**. The mountable housing **401** is continually pulled up to remove the tip or distal end of the shaft or hollow tube out from the cannula **219**. After the robotic surgical tool **101**A is dismounted, another robotic surgical tool may be mounted in its place, including a new or freshly sterilized IAB robotic surgical tool **101**A.

[**0088**] As previously discussed, the robotic surgical tool **101**A may include one or more integrated circuits **426** to identify the type of robotic surgical tool coupled to the robotic arm, such that it may be properly controlled by the master control console **150**. However, the robotic surgical system may determine whether or not the robotic surgical tool is compatible or not, prior to its use.

[**0089**] The system verifies that the tool is of the type which may be used with the robotic surgical system **100**. The one or more integrated circuits **426** may signal to the computer **151** in the master control console **150** data regarding compatibility and tool-type to determine compatibility as well as control information. One of the integrated circuits **426** may include a non-volatile memory to store and read out data regarding system compatibility, the tool-type and the control information. In an exemplary embodiment, the data read from the memory includes a character string indicating tool compatibility with the robotic surgical system **100**. Additionally, the data from the tool memory will often include a tool-type to signal to the master control console how it is to be controlled. In some cases, the data will also include tool calibration information. The data may be provided in response to a request signal from the computer **151**.

[**0090**] Tool-type data will generally indicate what kind of tool has been attached in a tool change operation. For example, the tool-type data might indicate that an IAB robotic surgical instrument **101**A has been mounted to the robotic arm. The tool-type data may include information on wrist axis geometries, tool strengths, grip force, the range of motion of each joint, singularities in the joint motion space, the maximum force to be applied via the rotatable receiving elements **418**, the tool transmission system characteristics including information regarding the coupling of rotatable receiving elements **418** to actuation or articulation of a system within the robotic surgical instrument.

[**0091**] Instead of storing all of the tool-type date in the one or more integrated circuits **426**, most of the tool-type data may optionally be stored in memory or a hard drive of the computer **151** in the robotic surgical system **100**. An identifier may be stored in the one or more integrated circuits **426** to signal the computer **151** to read the relevant portions of data in a look up table store in the memory or the hard drive of the computer. The tool-type data in the look-up table may be loaded into a memory of computer **151** by the manufacturer of the robotic surgical system **100**. The look-up table may be stored in a flash memory, EEPROM, or other type of non-volatile memory. As a new tool-type is provided, the manufacturer can revise the look-up table to accommodate the new tool-specific information. It should be recognized that the use of tools which are not compatible with the robotic surgery system, for example, which do not have the appropriate tool-type data in an information table, could result in inadequate robotic control over robotic surgical tool by the computer **151** and the operator O.

[**0092**] In addition to the tool-type data, tool specific information may be stored in the integrated circuit **426**, such as for reconfiguring the programming of computer **151** to control the tool. There may be calibration information, such an offset, to correct a misalignment in the robotic surgical tool. The calibration information may be factored into the overall control of the robotic surgical tool. The storing of such calibration information can be used to overcome minor

mechanical inconsistencies between tools of a single type. For example, the tool-type data including the tool-specific data may be used to generate appropriate coordinate transformations and servo drive signals to manipulate the robotic arm and rotate the rotatable drivers **234**.

[**0093**] Additionally, some robotic surgical tools have a limited life span. Tool life and cumulative tool use information may also be stored on the tool memory and used by the computer to determine if the tool is still safe for use. Total tool life may be measured by clock time, by procedure, by the number of times the tool has been loaded onto a holder, and in other ways specific to the type of tool. Tool life data is preferably stored in the memory of the tool using an irreversible writing process.

[**0094**] Referring now to FIG. **3**A, a perspective view of a robotic surgical master control console **150** is illustrated. The master control console **150** of the robotic surgical system **100** includes the computer **151**, a binocular viewer **312**, an arm support **314**, a microphone **315**, a pair of control input wrists and control input arms in a workspace **316**, a speech recognizer **317**, foot pedals **318** (including foot pedals **318**A-**318**B), and a viewing sensor **320**.

[**0095**] The computer **151** may include one or microprocessors **302** to execute instructions and a storage device **304** to store software with executable instructions that may be used to generate control signals to control the robotic surgical system **100**. The master control console **150** generates the control signals to control the fluid flows through the embodiments of the IAB robotic surgical instruments into and out of a surgical site.

[**0096**] The viewer **312** has at least one display where images of a surgical site may be viewed to perform minimally invasive surgery. As discussed further below, the viewer **312** may be used to provide user-feedback to the operator O as to the control of the fluid flow through the IAB robotic surgical instruments into and out of a surgical site

[**0097**] The arm support **14** can be used to rest the elbows or forearms of the operator O (typically a surgeon) while gripping touch sensitive handles **325** (see FIGS. **3**B-**3**C), one in each hand, of the pair of control input wrists **352** in the workspace **316** to generate control signals. The touch sensitive handles **325** are positioned in the workspace **316** disposed beyond the arm support **314** and below the viewer **312**.

[**0098**] When using the master control console, the operator O typically sits in a chair, moves his or her head into alignment with the binocular viewer **312**, and grips the touch sensitive handles **325** of the control input wrists **352**, one in each hand, while resting their forearms against the arm support **314**. This allows the touch sensitive handles to be moved easily in the control space **316** in both position and orientation to generate control signals.

[**0099**] Additionally, the operator O can use his feet to control the foot-pedals to change the configuration of the surgical system and generate additional control signals to control robotic surgical instruments.

[**0100**] To ensure that the operator is viewing the surgical site when controlling the robotic surgical tools **101**, the master control console **150** may include the viewing sensor **320** disposed adjacent the binocular display **312**. When the system operator aligns his or her eyes with the binocular eye pieces of the display **312** to view a stereoscopic image of the surgical worksite, the operator's head sets off the viewing sensor **320** to enable the control of the robotic surgical tools **101**. When the operator's head is removed the area of the display **312**, the viewing sensor **320** can disable or stop generating new control signals in response to movements of the touch sensitive handles in order to hold the state of the robotic surgical tools.

[**0101**] The computer **151** with its microprocessors **302** interprets movements and actuation of the touch sensitive handles **325** (and other inputs from the operator O or other personnel) to generate control signals to control the robotic surgical instruments **101** in the surgical worksite. In one embodiment of the invention, the computer **151** and the viewer **312** map the surgical worksite into the controller workspace **316** so it feels and appears to the operator that the touch sensitive handles **325** are working over surgical worksite.

[**0102**] Referring now to FIG. **3**B, a perspective view of a control input wrist **352** with a touch sensitive handle **325** is illustrated. The control input wrist **352** is a gimbaled device that pivotally supports the touch sensitive handle **325** of the master control console **150** to generate control signals that are used to control the robotic surgical manipulator **152** and the robotic surgical tools **101**, including an IAB robotic surgical tool **101**A. A pair of control input wrists **352** are supported by a pair of control input arms in the workspace **316** of the master control console **150**.

[**0103**] The control input wrist **352** includes first, second, and third gimbal members **362**, **364**, and **366**. The third gimbal member is rotationally mounted to a control input arm (not shown).

[**0104**] The touch sensitive handle **325** includes a tubular support structure **351**, a first grip **350**A, and a second grip **350**B. The first grip and the second grip are supported at one end by the structure **351**. The touch sensitive handle **325** can be rotated about axis G illustrated in FIGS. **3**B-**3**C. The grips **350**A, **350**B can be squeezed or pinched together about the tubular structure **351**. The "pinching" or grasping degree of freedom in the grips is indicated by arrows Ha,Hb in FIG. **3**B and arrows H in FIG. **3**C.

[**0105**] The touch sensitive handle **325** is rotatably supported by the first gimbal member **362** by means of a rotational joint **356***g*. The first gimbal member **362** is in turn, rotatably supported by the second gimbal member **364** by means of the rotational joint **356***f*. Similarly, the second gimbal member **364** is rotatably supported by the third gimbal member **366** using a rotational joint **356***d*. In this manner, the control wrist allows the touch sensitive handle **325** to be moved and oriented in the workspace **316** using three degrees of freedom.

[**0106**] The movements in the gimbals of the control wrist **352** to reorient the touch sensitive handle in space can be translated into control signals to control the robotic surgical manipulator **152** and the robotic surgical tools **101**. In particular, the rotational motion of the touch sensitive handle **325** about axis G in FIGS. **3**B-**3**C may be used to control the flow of fluids through the IAB robotic surgical tools.

[**0107**] The movements in the grips **350**A,**350**B of the touch sensitive handle **325** can also be translated into control

signals to control the robotic surgical manipulator **152** and the robotic surgical tools **101**. In particular, the squeezing motion of the grips **350**A,**350**B over their freedom of movement indicated by arrows Ha,Hb or H, may be used to control the flow of fluids through the IAB robotic surgical tools.

[**0108**] In embodiments of the invention, one or a combination of both the rotational motion of the touch sensitive handle **325** and the squeezing motion of the grips **350**A, **350**B may be used to control the flow of fluids through the IAB robotic surgical tools. For example, the rotational motion of the touch sensitive handle **325** may be used for the control of irrigation while the squeezing motion of the grips **350**A,**350**B may be used for controlling suction in a surgical site.

[**0109**] To sense the movements in the touch sensitive handle and generate controls signals for the IAB robotic surgical tool, sensors can be mounted in the handle **325** as well as the gimbal member **362** of the control input wrist **352**. Exemplary sensors may be a Hall effect transducer, a potentiometer, an encoder, or the like.

[**0110**] Referring now to FIG. **3**C, a cross-sectional view of the touch sensitive handle **325** and gimbal member **362** of the control input wrist **352** is illustrated. FIG. **3**C provides an example as to how the touch sensitive handle **325** can be mounted to the control input wrist **352** to sense the gripping and rotation of the handle to control robotic surgical tools **101**, including IAB robotic surgical tools **101**A.

[**0111**] As illustrated in FIG. **3**C, the exemplary gimbal member **362** includes beveled gears **368***a*, **368***b* which can couple the rotational motion of the touch sensitive handle **325** to a roll sensor **370**. The roll sensor **370** may use a potentiometer or encoder **370***b* included in a roll motor **370***a* to sense the rotation. Alternatively, a separate roll sensor, such as a potentiometer, may be directly coupled to the shaft **380** to sense the rotation of the touch sensitive handle. In any case, a roll sensor senses the roll motion of the touch sensitive handle **325** and generates control signals in response thereto to control the robotic surgical tools **101**. The control of IAB robotic surgical tools **101**A using the roll motion of the touch sensitive handle **325** is discussed below with reference to FIG. **16**A.

[**0112**] To sense a squeezing motion in the grips **350**A, **350**B of the touch sensitive handle **325**, a remote sensing assembly **386** may be included by the gimbal member **362**. The first and second grips **350**A,**350**B are adapted to be squeezed together by a hand of an operator O so as to define a variable grip separation. The grip separation may be determined as a function of a variable grip angle with an axis or as a function of a variable grip separation distance, or the like. Alternative handle actuations, such as movement of a thumbwheel or knob may also be provided in the handle to control the robotic surgical instruments **101**.

[**0113**] In the exemplary embodiment, the remote sensor assembly **386** includes a circuit board **394** on which a first and a second Hall effect sensors, HE**1**, HE**2** are mounted. A magnet **396** is disposed distally beyond the circuit board **394** and the Hall effect sensors. A magnetic mass **398** is axially coupled to the proximally oriented surface **390** of a push rod **84**. Thus, the magnetic mass **398** moves (as shown by Arrow J) with the push rod **384** and varies the magnetic field at the Hall effect sensors in response actuation of the grips **350**A, **350**B.

[**0114**] To translate the squeezing action of the grips **350**A, **350**B to the sensor **386**, the gimbal member **362** includes a push rod **384** within the tubular handle structure **351**. Each of the grips **350**A, **350**B pivot about a respective pivot **334***a*, **334***b* in the tubular handle structure **351**. Urging links **335***a*, **335***b* respectively couple between the grips **350**A,**350**B and a first end of the push rod **384**. The squeezing action of the grips **350**A,**350**B is translated into a linear motion on the push rod **384** by means of urging links **335***a*,**335***b* as shown by arrow A in FIG. **3**C. A second end of the push rod **384** couples to the sensor **386**. As discussed previously, the magnetic mass **398** is axially coupled to the surface **390** of the push rod **384** in order to sense the linear motion in the push rod and the squeezing motion of the grips **350**A,**350**B.

[**0115**] A biasing mechanism such as spring **392** applies a force against the squeezing motion of the grips to return them to full open when the grips are released. The biasing spring **392** may be a linear or non-linear elastic device biasing against the depression of grips **350**A, **350**B, e.g., a single or multiple element assembly including springs or other elastic members. For example, spring **392** may comprise a concentric dual spring assembly whereby one spring provides a "softer" bias response as the grips **350**A, **350**B are initially depressed, and a second spring provides a superimposed "firm" bias response as the grips **350**A, **350**B approach a fully depressed state. Such a non-linear bias may provide a pseudo force-feedback to the operator.

[**0116**] It should be noted that a wide variety of alternative sensing arrangements may be used to translate the mechanical actuation of the touch sensitive handle and control input wrist into control signals. While Hall effect sensors are included in the exemplary embodiment, alternative embodiments may include encoders, potentiometers, or a variety of alternative optical, electrical, magnetic, or other sensing structures.

Irrigation/Aspiration/Blowing Robotic Surgical Instrument

[**0117**] A number of embodiments of irrigation/aspiration/blowing (IAB) robotic surgical tools that can be mounted to a robotic arm in a robotic surgical system are now described.

[**0118**] Referring to FIGS. **4**A-**4**B, an irrigation/aspiration/blowing (IAB) robotic surgical tool or instrument **400** is illustrated in greater detail than that of instrument **101**A. In one embodiment of the invention, the IAB robotic surgical instrument **400** has an interface that is backward compatible to the adapter **228** that is typically used for other types of robotic surgical instruments. In yet another embodiment of the invention, the IAB robotic surgical instrument **400** has a reusable instrument housing with modular valve components that are disposable. In yet another embodiment of the invention, the entire IAB robotic surgical instrument **400** is disposable.

[**0119**] The IAB robotic surgical instrument **400** includes a mountable housing **401** at a proximal end and a hollow tube **404** coupled together as shown in FIG. **4**A. The mountable housing **401** maybe a reusable housing including some reusable components therein. The mountable housing **401** is backward compatible and includes an interface base **412** that can couple to the adapter **228** to which other surgical tools may also couple. The mountable housing **401** may further

include one or more tube fittings **410**A-**410**C, a cover **414**, and one or more release levers **416**.

[**0120**] The hollow tube **404** is elongated and has an opening **424** at its tip **406**, the distal end of the instrument **400**. The hollow tube **404** may also be referred to as a hollow instrument shaft or a hollow probe. The hollow tube **404** may be reusable or disposable. The hollow tube **404** maybe coupled to the interface base **412** for additional support. Alternative, the hollow tube **404** may couple directly to a modular disposable valve subassembly and avoid coupling to the interface base such that it too is disposable.

[**0121**] In one embodiment of the invention, the hollow tube **404** is a hollow circular cylindrical shape. Fluids (e.g., gas, liquid, with or without solids) may flow in the hollow tube **404** and into or out from a surgical site through the opening **424** at the tip **406**. The hollow tube **404** may further include one or more smaller openings **422** around its circumference substantially near the tip **406** to further allow fluid to flow into and out of a surgical site. The diameter of the opening **424** may be substantially same as the inner diameter of the tube **404**. In one embodiment of the invention, the diameter of the hollow tube **404** may be between 5 mm and 8 mm. The hollow tube **404** may be formed out of metal, plastic or other rigid material that can be hollow to allow fluid to flow therein while being positioned within a patient's body at a surgical site or over a surgical area.

[**0122**] The interface base **412** is used to mount the instrument **400** to a robotic arm of a surgical robotic manipulator. The interface base **412** both mechanically and electrically couples the IAB robotic surgical instrument **400** to a robotic arm of the surgical robotic manipulator **152**. The release levers **416** are located at the sides of the mountable housing and may be used to release the robotic surgical instrument **400** from a robotic arm.

[**0123**] A first end of the one or more tube fittings **410**A-**410**C may respectively couple to the one or more hoses **106**A-**106**C, respectively. The one or more tube fittings **410**A-**410**C may be barb fittings, luer fittings, or other types of hose or tube fittings. A second end of the one or more tube fittings **410**A-**410**C couples to a flow control system **417** within the mountable housing **401**. In some embodiments of the invention, the one or more hoses **106**A-**106**C may directly couple to the flow control system without the one or more tube fittings **410**A-**410**C. The end of the hollow tube **404** opposite the tip **406**, also couples to the flow control system **417**.

[**0124**] The flow control system **417** controls the flow of fluids, including any solids that may be transported by the fluid, between the surgical site and the one or more hoses **106**A-**106**C through the IAB robotic surgical instrument **400**. The flow control system **417** may include one or more valves of a valve subassembly to control the flow of fluids and any solids that may be transported by the fluid. Note that a fluid may be a liquid, a gas, a vacuum, or any combination thereof. The flow control system **417** may be controlled by control signals generated by an operator O at the master control console **150** to control the fluid flow through the IAB robotic surgical instrument **400**. In addition to robotic control, a number of embodiments of the invention include an optional manual actuation of the valves of the IAB robotic surgical instrument **400**. In which case, either an assistant A can manually operate the flow control system **417** and control the fluid flow or the operator O at the master control console **150** may robotically operate the flow control system **417** to control the fluid flow through the IAB robotic surgical instrument **400**. The operator O at the master control console **150** can position the IAB robotic surgical instrument **400** where the operator wants it within the surgical site. Then, to free up the operator's hands to perform some other task at the master control console, the IAB robotic surgical instrument **400** may be controlled manually by an assistant, remaining attached to a robotic arm. The operator can then give verbal instructions to the assistant to manually control the irrigation/suction/blowing in the surgical site selected by the operator.

[**0125**] The cover **414** covers over to protect the flow control system **417** such as a valve subassembly from damage and to maintain a sterile surgical environment during surgery. As the surgical instrument **400** is used during an operation or surgery at a surgical site of human patient, it is important that its components be sterilized.

[**0126**] As body fluids of a human patient will be flowing through the surgical instrument **400** during use, it may be desirable to re-sterilize the IAB robotic surgical tool for reuse. However, it may be difficult to re-sterilize portions of the flow control system **417**, such as valves, within the IAB robotic surgical tool **400**. Thus, portions of the flow control system **417** may be replaced instead of sterilized after usage. If components forming the IAB robotic surgical instrument **400** are relatively inexpensive, the IAB robotic surgical instrument **400** may be discarded in its entirety instead of re-sterilzing or replacing components.

[**0127**] FIG. **4**B illustrates a back side view of a portion of the IAB robotic surgical tool **400**, some elements of which were previously discussed. In particular, the interface base **412** is illustrated with rotatable receiving elements **418** rotatably coupled thereto. The rotatable receiving elements **418** provide a mechanical coupling to the rotatable drivers **234** and drive motors mounted of the robotic surgical manipulator **152**. Each of the rotatable receiving elements **418** include a pair of pins **422** extending from a surface thereof. An inner pin **422**A is closer to an axis of rotation of each rotatable receiving elements **418** than an outer pin **422**B, which helps to ensure positive angular alignment of the rotatable receiving elements **418**. In one embodiment of the invention, the rotatable receiving elements **418** are disk shaped and may be referred to as rotatable disks.

[**0128**] The interface base **412** further includes an array of electrical connecting pins **424** and one or more integrated circuits **426** coupled to a printed circuit board **425** within the mountable housing **401**. As the interface base **412** is backward compatible to the adapter **228**, it maybe mechanically actuated by pre-existing driver motors found in the robotic surgical manipulator **152**. While the interface base **412** has been described herein with reference to mechanical and electrical coupling elements, it should be understood that other modalities maybe used, including infrared coupling, magnetic coupling, inductive coupling, or the like.

[**0129**] Referring now to FIGS. **5**A-**5**D, schematic flow diagrams of robotic surgical tools **500**A-**500**D are respectively illustrated to provide irrigation, suction, blowing, or any combination thereof within a surgical site.

[**0130**] FIG. **5**A is a schematic flow diagram of an irrigation/aspiration robotic surgical tool **500**A that uses a pair of

valves mounted within a housing **501**A. The tool **500**A includes the hollow tube **504**, a valve subassembly **506**, a three-way coupler **508**, and tube fittings **509**A-**509**B. The tube fittings **509**A-**509**B may have an irrigation hose **106**A and a suction hose **106**B respectively coupled thereto.

[**0131**] The valve subassembly **506** includes a first two-way two-position valve **510**A and a second two-way two-position valve **510**B. After use, the valve subassembly **506** may be removed and replaced by a new sterilized valve subassembly for reuse of the tool **500**A. The valves are a component of the tool that is more difficult to clean and sterilize for reuse.

[**0132**] Each of the two way valves **510**A-**510**B includes two ports. A first port couples to the three-way coupler **508** while a second port couples to the fittings **509**A or **509**B, respectively. A three-way coupler **508** includes three ports one of which is coupled to the hollow tube **504**. The second port of the three-way coupler couples to a port of the valve **510**A. A third port of the three-way coupler **508** couples to a port of the valve **510**B.

[**0133**] A fluid may flow in or out of the hollow tube **504** as illustrated by the double-headed arrow near the tip. Either valve **510**A or **510**B may be open so that a fluid may flow through the hollow tube **504**. With valve **510**B open and valve **510**A substantially closed, a suction may be applied near the tip of the surgical instrument **500**A so that a surgical site may be aspirated. With valve **510**B substantially closed and valve **510**A open, a liquid may flow through the surgical instrument **500**A out through the hollow tube **504** into a surgical site so that it may be irrigated. The liquid is coupled to the surgical instrument **500**A by the hose **106**A.

[**0134**] FIG. **5**B is a schematic flow diagram of an irrigation/aspiration robotic surgical tool **500**B that uses a single valve mounted within a housing **501**B to provide irrigation, or aspiration. The surgical instrument **500**B includes a single three-way valve **516** with three ports, the hollow tube **504**, and the tube fittings **509**A-**509**B. The three way coupler **508** is not needed.

[**0135**] The three-way valve **516** has three ports. A first port of the three-way valve couples to the proximal end of the hollow tube **504**. A second port couples to the tube fitting **509**A that may couple to the hose **106**A. A third port of the valve **516** couples to the tube fitting **509**B that may in turn couple to hose **106**B.

[**0136**] The three-way valve **516** has three-positions of operation. In a closed position, the valve is completely shut off so that no fluid flows through the hollow tube **504**. In a second position suction is shut off, the first port and the second port of the valve couple together such that the surgical site may be irrigated by a liquid flowing through valve **516** and into the hollow tube **504**. In a third position irrigation is shut off, the first port and the third port of the valve couple together such that a vacuum or a suction may flow through valve **516** and a surgical site may be aspirated at the tip of the hollow tube **504**.

[**0137**] FIG. **5**C is a schematic flow diagram of an irrigation/aspiration/blowing robotic surgical tool **500**C that uses a single valve mounted within a housing **501**C to provide irrigation, aspiration or blowing. The surgical instrument **500**C includes a single four-way four position valve **526**, the hollow tube **504**, and the tube fittings **509**A-**509**B coupled together as illustrated in the mountable housing **501**C. A four way coupler **508** is not needed.

[**0138**] The single four-way valve **526** includes four ports. A first port of the four-way valve **526** couples to the proximal end of the hollow tube **504**. A second port of the valve **526** couples to one end of the tube fitting **509**A. A third port of the valve **526** couples to an end of the tube fitting **509**B. A fourth port of the valve **526** couples to an end of the tube fitting **509**C. Hoses **106**A-**106**C may respectively couple to the tube fittings **509**A-**509**C. In this manner three of the four ports of valve **526** may receive a liquid for irrigation, a vacuum for suction and a pressurized gas for blowing, respectively.

[**0139**] The four-way valve **526** has four positions of operation. In a closed position, the valve is completely shut off so that no fluid flows through the hollow tube **504**. In a second position suction/blowing are shut off, the first port and the second port of the valve couple together such that the surgical site may be irrigated by a liquid flowing through valve **526** and into the hollow tube **504**. In a third position irrigation/suction are shut off, the first port and the third port of the valve couple together such that a pressurized gas may flow through valve **516** and out through the tip of the hollow tube **504** to blow a surgical site with a pressurized gas. In a fourth position irrigation/blowing are shut off, the first port and the fourth port of the valve couple together such that a vacuum may provide suction through the valve **516** and the hollow tube **504** to a surgical site to remove fluids and solids transported therein at the tip of the hollow tube **504**.

[**0140**] FIG. **5**D is a schematic flow diagram of an irrigation/aspiration/blowing robotic surgical tool **500**D that uses three two-way valves in a valve subassembly mounted within a housing **501**D to provide irrigation, aspiration or blowing. The robotic surgical instrument **500**D includes a valve subassembly **536**, a four-way coupler **538**, the hollow tube **504**, and the tube fittings **509**A-**509**C. The tube fittings **509**A-**509**C may couple to the hoses **106**A-**106**C, respectively.

[**0141**] In place of the four-way valve **526** illustrated in FIG. **5**C, the valve subassembly **536** includes three two-way two-position valves **510**A-**510**C of a valve subassembly **536** in conjunction with a four-way coupler **538**. In comparison with the tool **500**A of FIG. **5**A, a third two-way valve **510**C is provided so that a third fluid may flow into and out of the hollow tube **504**. In this case, a pressurized gas may be supplied by hose **106**C, flow through valve **510**C when opened, flow through the four way coupler **538**, and into the hollow tube **504** to blow a pressurized gas near the surgical site.

[**0142**] Each of the two way two position valves **510**A-**510**C includes two ports. A first port of each couples to respective ports of the four-way coupler **538** while a second port of each couples to the fittings **509**A, **509**B or **509**C, respectively. The four-way coupler **538** includes four ports one of which is coupled to the hollow tube **504**. The second port of the four-way coupler **538** couples to a port of the valve **510**A. A third port of the four-way coupler **538** couples to a port of the valve **510**B. A fourth port of the four-way coupler **538** couples to a port of the valve **510**C.

[**0143**] Valve subassembly **536** may be replaceable with a sterile component while the other elements mounted in the

housing **501**D may be separately sterilized and reused with a new valve subassembly **536**.

[**0144**] Various types of valves may be used as part of the flow control system **417** in the IAB robotic surgical instrument **400**, **101**A to control the flow of fluids to provide irrigation, aspiration, or blowing. For example, a linear motion type of valve ("linear valve") may be used such as a spool-type valve, a trumpet-type valve, a piston-type valve, a poppet-type valve, or a sliding-plate-type valve. Alternatively, a rotational motion type of valve ("rotatable valve") may be used such as a ball-type valve, a screw-type valve, a gate-type valve, a disc-type valve, a cock-type valve, a globe-type valve, or a rotary-plate-type valve. Additionally, the various types of valves within the IAB robotic surgical instrument may be actuated in different ways by the robotic surgical manipulator **152**. While three-way and two-way valves have been separately shown and described, any mixed combination of one or more two-way valves and one or more three-way valves, or other multi-port valve, may be used within an IAB robotic surgical instrument with different types of couplers to provide a flow control system therein. For example, an IAB robotic surgical instrument may include a three-way valve **516** for gas pressure and suction and a two-way valve **510**A for irrigation by a liquid coupled to a three-way coupler **508**, which is in turn coupled to the tube **504**.

[**0145**] Moreover, the valves used in the flow control system may be automatically returned to a closed position so that no fluid flows through the IAB robotic surgical tool when it is dismounted from the robotic arm or when the modular valve assembly is not mounted in the housing of the tool. That is, the valves may be spring loaded by a spring to return to a closed or fully off position when they are not actuated.

[**0146**] FIGS. **6**A-**6**C, **7**A-**7**C, **8**, **9** and **10**A-**10**B illustrate some of the various types of valves, various types of actuation means, and various types of automatic return means that may be used to control the flow of fluids through the robotic surgical instrument and into the surgical site. It is understood that other types of valves, actuation means, and automatic return means may be used to provide flow control for a flow control system of an IAB robotic surgical tool.

[**0147**] Referring now to FIGS. **6**A-**6**C, rotational actuators to actuate rotatable valves are illustrated for use with the irrigation/aspiration/blowing robotic surgical tool and the robotic surgical arm.

[**0148**] In FIG. **6**A, the rotatable receiving element **418**A is directly coupled to the rotatable valve **604**A. As the rotatable receiving element **418**A is rotated, a shaft of the rotatable valve rotates to a different position in order to open or close the valve and control the flow of fluids. For actuation, the rotatable receiving element **418**A couples to the rotatable driver **234** of the adapter **228** in the robotic arm. The pins **422**A-**422**B of the rotatable receiving element **418**A couple into the respective openings **240**A-**240**B of the adapter **228**. A coil spring **606** may be used to return the rotatable valve **604**A to a closed or shut off position when the robotic surgical tool **101**A is dismounted from the robotic arm.

[**0149**] In FIG. **6**B, a rotatable receiving element **418**B rotatably couples to the rotatable valve **604**B through a gearing provided by the gears **610**-**611**. The rotatable receiving element **418**B similarly couples to the rotatable driver **234**. The rotatable receiving element **418**B includes the gear **610** which also may be referred to as a driving gear **610**. Valve **604**B includes the pinion gear **611** coupled to a shaft **602** of the rotatable valve in order to rotate the valve from one position to another. The gearing may be use to reduce or increase the rotation in the driver gear **610** to rotate the valve. The rotatable receiving element **418**B may further include the coil spring **606** to return the three-way four position valve **604**B to a shut off position. The rotatable valve **604**B is a three-way valve including three ports and has three positions.

[**0150**] In FIG. **6**C, the rotatable receiving element **418**C is linked to the rotatable valve **604**C by means of a linkage **620**. The rotatable receiving element **418**C includes a drive wheel with a notch **622** to receive a distal end of the linkage **620**. The rotatable valve **604**C is a three-way three position valve. The rotatable receiving element **418**C may move the valve **604**C into one of three positions. In position **620**A, the valve may be shut off so that no fluid flows through the robotic surgical tool **101**A, **400**. In position **620**B, a first fluid may flow between a first port and a second port. In position **620**C, a second fluid may flow between the first port and a third port.

[**0151**] To change positions of the valve using the linkage **620**, the rotatable receiving element **418**C may be moved counter clockwise, while the valve rotates clockwise. If the rotatable receiving element **418**C moves clockwise, the linkage **620** causes the valve to rotate counter clockwise. To actuate the rotatable valve, the rotatable receiving element **418**C couples to the rotatable driver **234** by means of the pins **422**A-**422**B coupling into the opening **240**A-**240**B respectively.

[**0152**] FIGS. **7**A-**7**C illustrate the linear actuation of linear motion valves that may be used in the flow control system **417** of IAB robotic surgical tools. The dashed lines shown in FIGS. **7**A-**7**C illustrate a dividing line between the robotic surgical tool **400**, **101**A and actuation in the robotic surgical arm **153**.

[**0153**] In FIG. **7**A, a push rod **702** is linearly actuated in the robotic arm **153**. One end of the push rod **702** pushes on a button **703** of a linear motion trumpet valve **704**A to move a plunger **705** therein. The trumpet valve **704**A is a two-way two-position valve. The plunger **705** in its closed position blocks the first and second ports of the trumpet valve **704**A. When the valve is linearly pushed open, a spring **706** is compressed and the plunger moves to a position **705'** such that the first and second ports are open to pass a fluid.

[**0154**] The push rod **702** may be linearly actuated in robotic arm in a number of ways including, but not limited to, pneumatically, hydraulically, electromechanically, or electrically. For example, a solenoid **701** may be used to linearly actuate the push rod **702** to linearly move the valve **704**A to an open position. When the push rod **702** is not actuated, the force of the spring **706** may push back on the push rod **702** and return the plunger of the valve to a closed plunger position **705** to shut off the first and second ports and stop a flow of a fluid. The spring **706** may also retain the plunger of the valve in a closed plunger position **705** to shut off the first and second ports when the IAB robotic surgical tool is dismounted.

[0155] In FIG. 7B, a spool valve 704B linearly moves in response to a magnetic force generated by the electromagnet 710 in the robotic arm 153. The electromagnet 710 may be formed out of coil of wire 711 wrapped around a magnetic core 712. When no electromagnetic field is generated by the electromagnet 710, a spring 706 keeps the spool 715 in a closed position blocking the first and second ports of the spool valve 704B. To actuate the spool valve, the electromagnet 710 is actuated to pull the spool 715 in a linear motion into position 715' so that the center hourglass portion of the spool 715 is coincident with the first and second ports to allow fluid to flow through the valve 704B. Spring 706 is compressed with the spool in position 715' such that when the electromagnetic force of the electromagnet 710 is released the spring 706 pushes back on the spool 715 to close off the valve 704B.

[0156] In FIG. 7C, a three-way spool valve 704C is electrically actuated by the robotic arm 153 to move the spool 725 with a linear motion. Electrical contacts 242 in the robotic arm 153 couple to the pins 424 of the robotic surgical tool 400, 101A. The three-way valve 704C includes the spool 725, three ports, a first spring 706A at a first end, and a second spring 706B at a second end, a first wire coil 710A at the first end, and a second wire coil 710B at the second end. A current in the wires 721A may flow through the coil 710A to attract the spool 725 towards the first end of the valve so that the ports 726 and 728 of the valve are coincident with the center hourglass portion of the spool to allow fluid to flow there-between. To shut off the valve, the current flow in the wires 721A is turned off and the spool 725 is pushed back into the closed position by the force of spring 706A. Springs 706A-706B maintain the spool in the center position shutting off the three ports in the valve from each other. By providing a current in the wires 721B and the coil 720B, the spool 725 is moved towards the second end and compresses the spring 706B. This allows the center hourglass portion of the spool 725 to coincide with the second port 727 and the third port 728 to allow a fluid to flow there-between. To shut off the valve, the current flow in the wires 721B is turned off and the spring 706B pushes the spool 725 back to its closed position.

[0157] Referring now to FIG. 8, a linear actuation is transformed into a rotational actuation for a rotatable valve by a rack and pinion gear system. When activated, a push rod 702 linearly pushes against a button 803 of the rack 801 in order to linearly move its teeth 810 and provide the initial linear actuation. The teeth 810 of the rack 801 are meshed with the pinion gear 811 to transform the initial linear actuation of the push rod into a rotational actuation. The pinion gear is coupled to a shaft 802 of the rotatable valve 804. As the teeth of the rack 801 linearly move, the pinion gear 811 transforms the linear motion into a rotational motion in order to rotate the rotatable valve 804 between open and closed positions to control the fluid flow.

[0158] A spring may be coupled between an end of the rack 801 and a stop in order to linearly push on the rack and rotate and maintain the valve in a closed position when the IAB robotic surgical tool is dismounted.

[0159] In addition to being robotically controlled from the master control console 150, the valves of the flow control system 417 of the IAB robotic surgical tools may also be manually controlled. Manual actuators may be provided that extend external to the housing so that a user's hand may open and/or close the valves.

[0160] Referring now to FIGS. 9A-9B, a rotational actuation is transformed into linear actuation by a cam and cam follower system for actuation of a linear motion trumpet valve 704A. Trumpet valve 704A illustrated in FIGS. 9A-9B operates similarly to trumpet valve 704A of FIG. 7A but with a cam follower 903 in place of the button 703 to better couple to the rotating cam 902. Additionally, the cam follower 903 of FIG. 9A may further include a manual push arm 913 that may extend for a top side of a housing of the IAB robotic surgical tools for manual operation of the trumpet valve 704A. The cam follower 903 of FIG. 9B may further include a manual push side arm 923 that may extend for a side of a housing of the IAB robotic surgical tools for manual operation of the trumpet valve 704A.

[0161] The rotatable receiving element 418D of the IAB robotic surgical tools is coupled to the cam 902. For robotic control from the master control console 150, the rotatable receiving element 418D couples to the rotatable driver 234 by means of the pins 422A-422B within the openings 240A-240B, respectively.

[0162] The cam 902 includes a cam lobe 904 that pushes on the cam follower 903 to a position 903' so that the plunger 705 is moved to an open position 705'. In the open position 705', the plunger allows the first and second ports to couple together and allow a fluid to flow there-between. As the cam rotates to move the cam lobe to a different position so that the cam follower can move back to its original position 903, the spring 706 pushes on the plunger 705 to move it back into the closed position to close the valve 704A.

[0163] The cam 902 may rotate clockwise or counter-clockwise so that the cam follower transforms a rotational motion into a linear motion to open and close the valve 704A. In this manner, a rotational actuation within the robotic surgical tool 400, 101A may be converted to linear actuation and actuate a linear motion valve, such as the trumpet valve 704A. A coil spring may be coupled around the shaft of the cam 901 in order to rotate it so that the valve can close when the IAB robotic surgical tool is dismounted.

[0164] With the cam 902 rotated to a position so that the valve 704A is closed, the valve may be manually operated. To manually operate valve 704A, a user pushes on the manual push arms 913,923 extending from the housing. With the manual push arms 913,923 being coupled to the cam follower 903, the force applied thereto manually forces open the valve 704A. This decouples the cam follower 903 from the cam 902. To close the valve 704A, a user releases the force applied to the manual push arms 913,923 which allows the spring 706 to push back out the plunger 705 into a closed position and shut off the valve.

[0165] Referring now to FIGS. 10A-10B, pinch valves 1004A-1004B for use in the flow control system of IAB robotic surgical tools are illustrated. The pinch valves 1004A-1004B are used to pinch closed a hose 1002,1002' to control the flow of fluids.

[0166] In FIG. 10A, a rotary pinch valve 1004A is illustrated to pinch closed a hose 1002 and can be rotated to release and open the hose 1002. Without the hose 1002 pinched off, a fluid is allowed to flow therein and through the

IAB robotic surgical tools. The rotary pinch valve **1004**A pinches the hose **1002** closed against a backstop **1005** to shut off the flow of fluids. The hose **1002** may be a silicon rubber hose that is flexible in order that it may be readily pinched off and stop the fluid flow therein and flex back when released.

[**0167**] The rotary pinch valve **1004**A is coupled to a shaft of the rotatable receiving element **418**E to receive a rotational actuation. The rotatable receiving element **418**E may couple to the rotatable driver **234** in a similar fashion as previously described with pins **422**A-**422**B inserted into the respective openings **240**A-**240**B.

[**0168**] The rotary pinch valve **1004**A includes a rotatable pinch arm **1020** and a pinch roller **1022** coupled to the distal end of the rotatable pinch arm **1020**. The rotary pinch valve **1004**A may further include a spring **1006** coupled to the rotatable receiving element **418**E in order to bias the pinch valve to a closed position and pinch off the hose when the surgical tool **101**A, **400** is dismounted.

[**0169**] In the closed position, the pinch roller **1022** pinches off the hose **1002** against the backstop **1005**. In rotating the pinch valve **1004**A and the rotatable pinch arm from the closed position to a position **1020'**, the pressure against the hose **1002** is released such that it flexes open and allows fluid to flow therein.

[**0170**] In FIG. **10**B, a linear pinch valve **1004**B is illustrated to pinch closed a hose **1002'**. The linear pinch valve **1004**B can be moved linearly to release and open the hose **1002'**. Without the hose **1002'** pinched off, a fluid is allowed to flow therein and through the IAB robotic surgical tools. The linear pinch valve **1004**B pinches the hose **1002'** closed against a backstop **1015** to shut off the flow of fluids. The hose **1002'** may be a silicon rubber hose that is flexible in order that it may be readily pinched off and stop the fluid flow therein and flex back when released.

[**0171**] A push rod **702** may be provided in the robotic arm **153** to provide linear actuation of the linear pinch valve **1004**B. The push rod **702** pushes on a button **1013** to a position **1013"**, compressing a spring **1016**, and linearly moving the linear pinch valve **1004**B and a linear pinch arm **1030** to position **1030'** to release the hose **1002** from the backstop **1015**. With the linear pinch arm **1030** in the open position **1030'**, the linear pinch valve is open and fluid can flow within the hose **1002'**. Upon releasing the linear force provided by the push rod **702** within the robotic arm **153**, the spring **1016** forces back the linear pinch arm **1030** of the linear pinch valve **1030** to squeeze the hose **1002** against the backstop **1015**. In this manner, a linear actuating motion of the push rod **702** can activate a linear pinch valve **1004**B.

[**0172**] FIGS. **11**A-**15**B illustrate exemplary embodiments of IAB robotic surgical tools including varying types of flow control systems.

[**0173**] Referring now to FIGS. **11**A-**11**E, irrigation/aspiration/blowing robotic surgical tools having a flow control system with a solid valve body are now discussed.

[**0174**] FIG. **11**A illustrates a top perspective view of an IAB robotic surgical tool **1100** with its cover removed to show the flow control system **417** therein. The IAB robotic surgical tool **1100** employs a solid valve body **1101**. The solid valve body **1101** is a three-dimensional solid body that includes hollow passages with open ports therein and a pair of valve openings to receive a pair of rotatable valves **1104**A-**1104**B. In one embodiment of the invention, the solid valve body **1101** is a polyhedron shaped solid body.

[**0175**] With a solid valve body, the flow control system **417** of the IAB robotic surgical tool **1100** is relatively inexpensive to manufacture such that the flow control system **417** may be discarded after use, instead of cleaned or sterilized. The remaining components of the tool **1100** may be cleaned and re-sterilized. Alternatively, the IAB robotic surgical tool **1100** is also relatively inexpensive to manufacture such that it may be discarded in its entirety after usage.

[**0176**] A first port of the solid valve body **1101** couples to the proximal end of the hollow tube **404**. Second and third ports of the solid valve body **1101** may couple to the hose fittings **410**A-**410**B. The hose fittings **410**A-**410**B may respectively couple to hoses **106**A-**106**B. The solid valve body **1101** includes a three-way passage **1106** coupled between the proximal end of the hollow tube **404** and first ports of rotatable valves **1104**A-**1104**B. The solid valve body **1101** further includes passages **1108**A-**1108**B coupled between second ports of the rotatable valves **1104**A-**1104**B and the hose fittings **410**A-**410**B, respectively. The rotatable valves **1104**A-**1104**B are two-way two-position valves and each have an open flow channel that can be rotated and switched open or closed between the ports to the respective passages **1108**A-**1108**B and the ports to the three-way passage **1106**.

[**0177**] Although a third valve and a third set of passages are not illustrated in FIG. **11**A, it is understood that it may be provided to provide flow control for a third type of fluid.

[**0178**] The hollow tube **404** is mechanically supported in the mountable housing by having an end coupled into the first port of the solid valve body **1101**. The hollow tube **404** maybe further supported mechanically by being inserted into a bushing that is supported within the collar **1102** of the interface base **412**. As previously discussed, the hollow tube **404** has an opening **424** at its tip **406**. The hollow tube **404** may further have openings around its circumference near its tip **406**.

[**0179**] The solid valve body **1101** may be fitted to the interface base **412** so that it is readily replaceable. The hollow tube **404** may be fitted with a quick release fitting to the solid valve body **1101** so that it can be readily re-sterilized and reused.

[**0180**] Referring now to FIG. **11**B, a bottom exploded view of the IAB robotic surgical tool **1100** is illustrated. As illustrated by FIG. **11**B, the solid valve body **1101** includes valve openings **1109**A-**1109**B to receive the rotatable valves **1104**A-**1104**B, respectively. The valve openings **1109**A-**1109**B in the solid valve body may include threads or rings to allow the rotatable valves **1104**A-**1104**B to rotate in a fixed axial position with respect to the passages **1106**, and **1108**A-**1108**B.

[**0181**] Coupled to one end of a cylindrical shaft **1105** of each of the rotatable valves **1104**A-**1104**B is a rotatable receiving element **418** with pins **422**A-**422**B. The rotatable receiving element **418** of the rotatable valves **1104**A-**1104**B may further include a tab **1114** to abut against a stop within the interface base **412**.

[0182] Elements of the rotatable valves **1104**A-**1104**B may be molded together as one piece to further lower the cost of manufacture of the flow control system. As valves **1104**A-**1104**B are substantially similar, a further detailed description of valve **1104**A is only provided with valves **1104**A-**1104**B being collectively referred to as valves **1104**.

[0183] In the cylindrical shaft **1105** of the valves **1104** is the flow channel **1110**. The flow channel **1110** of the rotatable valves **1104** may be a slanted opening through the cylindrical shaft. The flow channel **1110** of the rotatable valves **1104** may be a slanted opening through the cylindrical shaft. Wrapped around the cylindrical shaft are one or more seals **1112** to seal off the flow channel **1110** within the valve body **1101**. A slanted seal **1113** may be provided above the slanted opening of the flow channel **1110**. In an alternate embodiment of the invention, an additional slanted seal **1113** may be provided below the slanted opening of the flow channel **1110**. The cylindrical shaft **1105** has circumferential channels to respectively receive a portion of the one or more seals **1112**. The cylindrical shaft **1105** has one or more slanted channels in its cylindrical surface to respectively receive a portion of the one or more slanted seals **1113**. The channels in the shaft **1105** keep the seals in position as the valve is moved.

[0184] Referring now to FIG. **11**C, a cross section of one of the rotatable valves **1104** is illustrated in a closed position. As discussed previously, the rotatable valve **1104** includes the cylindrical shaft **1105** coupled at one end to the rotatable receiving element **418**.

[0185] The cylindrical shaft **1105** includes the flow channel **1110**. The flow channel **1110** has a first port **1110**A at one end and a second port **1110**B at a second end. As discussed previously, the flow channel **1110** may be slanted from the first port **1110**A to the second port **1110**B. As valve **1104** is in a closed position in FIG. **11**C, neither the first port **1110**A nor the second port **1110**B of the flow channel **1110** matches the ports into the passages **1106** or **1108**A, **1108**B. The cylindrical shaft **1105** further includes one or more seals **1112** near top and bottom portions to seal off the flow channel **1110** in the solid body **1101**. The cylindrical shaft **1105** further includes the slanted seal **1113** between a top seal **1112** and the slanted flow channel **1110** to further seal the rotatable valve within the solid body **1101**.

[0186] The slanted seal **1113** around the cylindrical shaft **1105** allows for relaxed tolerances between the rotatable valve **1104** and the solid valve body **1101**. In particular, the slanted seal **1113** allows for a larger radial gap between the cylindrical shaft **1105** of the valve **1104** and the solid valve body **1101** while maintaining a leak-less seal. While the top and bottom seals **1112** seal the valve **1404** with respect to the valve body, the slanted seal **1113** seals the flow of fluids through the channel **1110**. The slanted seal **1113** seals the flow of fluids through the channel **1110** over the range of positions of the valve **1104**, from a fully closed position to a fully open position. The slanted seal **1113** particularly prevents leakage when the valve **1104** is in the closed position.

[0187] In an alternate embodiment of the invention, the channel **1110** in the cylindrical shaft **1105** is replaced by narrowing the center diameter portion of the cylindrical shaft **1105** between the slanted seal **1113** and the bottom seal **1112**, such as into an hour glass shape, to form a channel for fluid flow when the valve **1104** is moved from a closed position. In this case, the slanted seal **1113** forms an end portion of the channel.

[0188] The hollow tube **404** couples to a port of the three-way passage **1106**. The hose fittings **410**A, **410**B couple to the passages **1108**A, **1108**B, respectively. The hose fittings **410**A, **410**B and the hollow tube **404** may be press fitted into the solid valve body **1101** or have threads to be screwed into and mate with threads in passages **1106**, **1108**A, **1108**B of the solid valve body **1101**.

[0189] Referring now to FIG. **11**D, a cross section of one of the rotatable valves **1104** is illustrated in an open position. With the rotatable valve **1104** in an open position, a fluid can flow between the hollow tube **404** and one of the hose fittings **410**A, **410**B by way of the passages in the solid valve body **1101** and the flow channel **1110**.

[0190] In comparison with FIG. **11**C, the flow channel **1110** in the cylindrical shaft **1105** is reoriented to a position where its first port **1110**A matches a port of the three-way passage **1106** and its second port **1110**B matches a port of the passage **1108**A, **1108**B. In this manner, a fluid can flow from the hollow tube into the three way passage **1106**, through the flow channel **1110**, into the passage **1108**A,**1108**B and out of the hose fitting **410**A,**410**B. Alternatively, a fluid can flow from the hose fitting **410**A,**410**B, into the passage **1108**A, **1108**B, through the flow channel **1110**, into the three way passage **1106** and out from the hollow tube **404**.

[0191] FIGS. **11**C-**11**D illustrate one or more seals **1112** near top and bottom portions of the shaft **1105** and the slanted seal **1113** in parallel with the slanted flow channel **1110** to seal the rotatable valves **1004**A-**1104**B in the solid body **1101**.

[0192] The rotatable valves **1104**A and **1104**B may operate in the same rotational direction or in opposite rotational directions. That is, each rotatable valve may operate to open in a clockwise direction or a counterclockwise direction. Alternatively, rotatable valve **1104**A may open using a counterclockwise rotation while rotatable valve **1104**B opens using a clockwise rotation, for example.

[0193] With a solid valve body **1101** and one piece rotatable valves **1104**, the flow control system **417** can be made relatively inexpensive such that it can be readily discarded with or without other components of the surgical tool **1100**.

[0194] As discussed previously, the valves of the flow control system **417** of the IAB robotic surgical tools may also be manually controlled with manual actuators. Additional manually controlled valves may also be provided in parallel with robotically controlled valves in the flow control system in order to both manually and robotically control the fluid flows through an IAB robotic surgical instrument. Manual actuators are coupled to the manually controlled valves to extend external to the housing of the IAB robotic surgical tools so that a user's hand may open and/or close the valves.

[0195] Referring now to FIG. **11**E, the solid valve body **1101** has been modified to solid valve body **1101'** that includes manually controlled valves **1124**A-**1124**B in parallel with the respective robotically controlled valves **1104**A-**1104**B in order that the fluid flows through the IAB robotic surgical instrument **1100**B may be controlled manu-

ally by hand and robotically from a master control console **150**. The manually controlled valves **1124**A-**1124**B are trumpet valves, a type of valve such as illustrated in FIG. **7**A and previously described. The valves **1124**A-**1124**B each include a button **1125** on top that extends out from the housing **401** through the cover **414** (not illustrated in FIG. **11**E), such as illustrated in FIG. **13**B. However, the trumpet valves **1124**A-**1124**B are two-way two position valves that are linearly actuated by a finger or hand pushing on the button to open the valve and allow fluid to flow. As in valve **704**A, each of the manually controlled valves **1124**A-**1124**B includes a spring **706** to return the valve to a closed position when the force is released from the button **1125**. (see FIG. **7**A). The button **1125** is similar to the button **703** of the valve **704**A illustrated in FIG. **7**A.

[**0196**] To support the valves **1124**A-**1124**B, the two way passages **1108**A-**1108**B and the three way passage **1106** in the solid valve body **1101** illustrated in FIG. **11**A are modified respectively into three way passages **1108**A'-**1108**B' and a five way passage **1106'** of the solid valve body **1101'** illustrated in FIG. **11**E. The five way passage **1106'** includes one or more parallel passages **1126** to a port of the valves **1124**A-**1124**B. That is, the five way passage **1106'** has a first port to couple to the tube **404**, a second port and a third port to respectively couple to valves **1104**A, **1104**B, and a fourth port and a fifth port to respectively couple to the valves **1124**A-**1124**B. The three way passages **1108**A'-**1108**B' each include a side passage **1128** to a port of the valves **1124**A-**1124**B. The three way passage **1108**A' has a first port to couple to the valve **1104**A, a second port to couple to the valve **1124**A, and a third port to couple to the hose fitting **410**A. The three way passage **1108**B' has a first port to couple to the valve **1104**B, a second port to couple to the valve **1124**B, and a third port to couple to the hose fitting **4101**B. The solid valve body **1101'** further includes an additional pair of valve openings to receive the spring **706** and the plunger **705** of the trumpet valve **704**A. Additional seals may be provided around the shaft between the plunger **705** and the buttons **703**,**1125**.

[**0197**] Otherwise, the modified solid valve body **1101'**, including the structure and function of the valves **1104**A-**1104**B, is similar to that of the solid valve body **1101** illustrated by FIGS. **11**A-**11**D and described previously.

[**0198**] Referring now to FIG. **12**, a top perspective view of an IAB robotic surgical tool **1200** is illustrated with its cover over the mountable housing removed. The IAB robotic surgical tool **1200** includes a modular valve subassembly **1201**. After being used once, the modular valve assembly **1201** and coupling hoses **1208**A-**1208**B are readily replaceable with new used components. The remaining portion of the tool **1200** may be re-sterilized and then reused with a new modular valve assembly **1201** and coupling hoses **1208**A-**1028**B. The modular valve subassembly **1201** is mountable to and dismountable from the interface base **412**. A base **1211** of the modular valve subassembly **1201** may press fit into place to mount the valve subassembly to the interface base **412**. The base **1211** of the modular valve subassembly **1201** includes recesses for rigid attachment of the ports of the valves **1204**A-**1204**B and the ports of the hose fittings **410**A-**410**B. Hoses **106**A-**106**B may be coupled to ends of the hose fittings **410**A-**410**B. The control and actuation of the rotatable valves **1204**A-**1204**B was previously described with reference to FIG. **6**A and the rotatable valve **604**A.

[**0199**] The modular valve subassembly includes a first rotatable valve **1204**A and a second rotatable valve **1204**B. Each of the valves **1204**A-**1204**B are two-way, two-position valves having a pair of ports. The valves **104**A-**104**B may be trumpet valves, ball cock style valves, or other rotatable type of valve used to control the flow of gases or fluids. Coupled to the first ports of each valve **1204**A-**1204**B are the hose fittings **410**A-**410**B, respectively. Coupled to a second port of each of the valves **1204**A-**1204**B are first ends of the respective coupling hoses **1208**A-**1208**B. Second ends of the hoses **1208**A-**1208**B respectively couple to a pair of ports of a three-way coupler **1206**. A third port of the coupler **1206** couples to the hollow tube **404**.

[**0200**] Shafts of the valves **1204**A-**1204**B can be coupled to and decoupled from a pair of rotatable receiving elements **418**. The modular valve subassembly **1201** is replaceable. After being used, the modular valve subassembly **1201** is dismounted from the interface base with shafts of the used valves **1204**A-**1204**B being decoupled from the rotatable receiving elements **418**. Similarly, shafts of new unused valves **1204**A-**1204**B may be coupled to the rotatable receiving elements **418** when mounting a new modular valve subassembly to the interface base.

[**0201**] Coil springs may be wrapped around the shafts of the valves **1204**A-**1204**B and coupled to the pair of rotatable receiving elements **418** in order to spring load the valves **1204**A-**1204**B to automatically close so that neither suction nor irrigation are activated when the instrument housing is not mounted onto the robotic arm, or modular valve subassembly is not mounted to the interface base **412** in the mountable housing **401**.

[**0202**] The hollow tube **404** is supported by the interface base. A bushing **1202** may be inserted over the hollow tube **404** and pressed into the collar **1102** of the interface base **412**.

[**0203**] The printed circuit board **425** may also be mounted to the interface base **412**. Electrical pins **424** may couple to the printed circuit board **425** to provide an electrical connection to the adaptor **228**. The integrated circuit **426** is mounted to the printed circuit board may be reprogrammed to indicate that the tool **1200** has been re-sterilized and its components replaced.

[**0204**] In order to reuse the IAB robotic surgical tool **1200**, the modular valve subassembly **1201** and the coupling hoses **1208**A-**1208**B are removed and discarded. A new valve subassembly **1201** and new hoses **1208**A-**1208**B are installed and mounted in the robotic surgical tool. The remaining components including the interface base **412**, the three-way coupler **1206** and the hollow tube **404** are re-sterilized prior to fitting a new modular valve subassembly **1201** and new hoses **1208**A-**1208**B.

[**0205**] After re-sterilization, the integrated circuit **426** may be programmed to indicate that the tool **1200** has been re-sterilized and its components replaced.

[**0206**] Referring now to FIGS. **13**A-**13**B, an IAB robotic surgical tool **1300** to control the flow of fluids into and out from a surgical site is illustrated. FIG. **13**A illustrates the

IAB robotic surgical tool **1300** with its cover removed to show that the IAB robotic surgical tool **1300** includes a flow control system that utilizes rotatable pinch valves **1304**A-**1304**B.

[**0207**] To control the flow of fluids through the robotic surgical tool **1300**, a pair of flexible coupling hoses **1302**A-**1302**B are coupled to a pair of hose fittings **410**A-**410**B at a first end and a pair of ports of a three-way coupler **1206** at a second end. The third port of the three-way coupler **1206** is coupled to the proximal end of the hollow tubing **404**. To pinch off hoses **1302**A-**1302**B, the tool **1300** includes a rotatable pinch valves **1304**A-**1304**B rotatably mounted to the interface base **412**. Each of the pinch valves **1304**A-**1304**B is coupled to a rotatable receiving element **418**. As discussed previously, the rotatable receiving element **418** may couple to a rotatable driver **234**.

[**0208**] Each of the rotatable pinch valves **1304**A-**1304**B may include a coil spring **1306**, a rotatable pinch arm **1320**, a pinch wheel **1322** coupled to the end of the rotatable pinch arm **1320**, a tab **1324**, and a handle **1330**. In FIG. **13**A, the pinch valve **1304**A is illustrated as being open and allowing the flow of fluid through the tool **1300**. Rotatable pinch valve **1304**B is illustrated as being closed to pinch off hose **1302**B at a pinch point **1302**B'.

[**0209**] At a pinch point **1302**B', a pinch wheel **1322** presses the hose **1302**B against the backstop **1315**B of bulkhead **1310**. The hose **1302**B collapses to a diameter of zero so that no fluid can flow through it at the pinch point **1302**B'. The rotatable pinch valve **1304**A may utilize the backstop **1315**A of bulkhead **1310** to close and pinch off hose **1302**A. The operation of a rotatable pinch valve is further discussed herein with reference to FIG. **10**A. When being opened from the closed position, the tab **1324** may be used to limit the rotation of each rotatable pinch valve **1304**A-**1304**B to a stop **1325**.

[**0210**] In order to readily collapse and pinch off the flow of fluids, the hoses **1302**A-**1302**B may be silicon hoses that are flexible with the capability of expanding to an open non-collapsed diameter from a collapsed state at the pinch point in response to opening the rotatable pinch valves. The pinch wheel **1322** rotates along the hose as its being pinched off so as to avoid damaging the hose and cause leeks.

[**0211**] The coil spring **1306** wrapped around the shafts of the pinch valves **1304**A-**1304**B may be used to spring load the valves **1204**A-**1204**B to automatically close and pinch off the hoses **1302**A-**1302**B when the instrument housing is dismounted from the robotic arm or otherwise not being actuated.

[**0212**] While the IAB robotic surgical tool **1300** is typically under control of the master control console **150**, the handles **1330**A-**1330**B allow for manual use of the IAB robot surgical tool **1300** when it is not mounted to a robotic arm. The handles **1330**A-**1330**B are respectively coupled to the shafts **1330**A-**1330**B of the rotatable pinch valves **1304**A-**1304**B in order to manually rotate them open and closed by hand. When the IAB robot surgical tool **1300** is not mounted to a robotic arm so that the rotatable receiving elements **418** are not engaged with the rotatable drivers **234**, the assistant surgeon or nurse may manually operate the IAB robotic surgical tool **1300** to control the fluid flows by using the handles **1330**A-**1330**B. Furthermore, the handles **1330**A-**1330**B allow for cleaning the flow control system as is described further below.

[**0213**] Referring now to FIG. **13**B, the IAB robotic surgical tool **1300** is illustrated with its cover **1350** coupled to the interface base **412**. The cover **1350** provides protection to the flow control system **417** including the rotatable pinch valves in the hoses. The handles **1330**A-**1330**B extend through the cover **1350** so that they are accessible to manually control the pinch valves.

[**0214**] Additionally, the handle **1330**A includes a clip **1332** that may be swung around and fitted into a groove **1334** of the handle **1305**B. With the clip **1332** within the groove **1334**, both handles **1330**A-**1330**B are open such that neither hose **1302**A nor hose **1302**B is pinched closed. The handles are clipped together in the open position during a cleaning of the flow control system of the robotic surgical tool **1300** and to ease replacement of the hoses.

[**0215**] To clip the handles together, the handle is rotated to the open position and the clip **1332** is swung to position **1332'**. The handle **1330**B is rotated to position **1330**B' so that the clip **1332'** may be inserted into its groove **1334**. In this position, the pinch valves are both open and the hoses **1302**A-**1302**B are not pinched off but are open so that they can be cleaned.

[**0216**] Referring now to FIG. **14**, a top view of a IAB robotic surgical tool **1400** is illustrated with its cover removed to show the pinch valves and replaceable tubing. The tool **1400** is substantially similar to tool **1300** previously described but for use of the coupling hoses **1302**A-**1302**B to control the flow of fluids within the tool. Tool **1400** eliminates the hose fittings **410**A-**410**B and the short coupling hoses **1302**A-**1302**B between the hose fittings **410**A-**410**B and the three-way coupler **1206**. Instead, the tool **1400** includes replaceable hoses **106**B-**106**A directly coupled to the ports of the three-way coupler **1206**, as is illustrated in FIG. **14**. The replaceable hoses **106**B-**106**A extend beyond the robotic surgical tool in order to couple externally to sources of fluids.

[**0217**] In contrast, the coupling hoses **1302**A-**1302**B of the tool **1300** require cleaning and sterilization after each use of the tool **1300** in order for it to be reused. In tool **1400**, the hoses **106**A-**106**B are not cleaned, but replaced after each usage with new sterile hoses so that the tool **1400** may be reused. With the rotatable pinch valves open, the interface base **412** is formed with bulkhead **1410** to allow the hoses **106**A-**106**B to be readily replaceable and coupled to the three-way coupled **1206**.

[**0218**] The tool **1400** includes the rotatable pinch valves **1304**A-**1304**B with their pinch arms **1320** and pinch rollers **1322** coupled thereto to pinch off the hoses **106**A-**106**B and stop the flow of fluids. The rotatable pinch valves are rotatably mounted to the interface base **412**. The shaft of each rotatable valve is coupled to the rotatable receiving element **418**.

[**0219**] In FIG. **14**, rotatable pinch valve **1304**A is open such that hose **106**A may allow a fluid to flow therein. Rotatable pinch valve **1304**B is closed to pinch off hose **106**B at point **1402**B. Thus, with pinch valve **1304**B closed, a fluid will not flow through hose **106**B. Bulkhead **1410** is provided so that the hoses **106**A-**106**B may be readily replaced when the rotatable pinch valves **1304**A-**1304**B are held in their open positions. The bulkhead **1410** includes backstops **1415**A and **1415**B against which the rotatable

pinch valves **1304**A-**1304**B may pinch off the respective hoses **106**A-**106**B. Hoses **106**A-**106**B may be formed of a silicon rubber compound so that they are flexible and can be readily collapsed and expanded in response to the opening and closing of the rotatable pinch valves.

[**0220**] As discussed previously, the replaceable hoses **106**B-**106**A are directly coupled to two of the three ports of the three-way coupler **1206**. The third port of the three-way coupler **1206** is coupled to the proximal end of the hollow tube **404**. The hollow tube **404** may be further supported by the interface base **412** by inserting a the hollow tube into a bushing mounted in the collar **1102**.

[**0221**] The IAB robotic surgical tools, including tool **1400**, may further include the printed circuit board **425** with one or more pins **424** and one or more interrelated circuits **426** coupled thereto to indicate its tool type, whether its new or refurbished, and if refurbished, the number of prior uses.

[**0222**] Referring now to FIGS. **15**A-**15**B, IAB robotic surgical tools **1500**A-**1500**B are respectively illustrated without their covers. The tools **1500**A-**1500**B do not internally control the flow of fluids into and out of a surgical site. Instead, the control of the flow of fluids into and out of a surgical site is externally controlled away from the surgical tool. As previously discussed with reference to FIG. **1**, the control of fluids may be provided at the respective fluid pumps by the computer system **151** in the surgeons master control console **150** under the control of the operator O.

[**0223**] Even though fluid flow is externally controlled, the IAB robotic surgical tools **1500**A-**1500**B are mounted to a robotic arm of the robotic surgical manipulator **152** and can facilitate the flow of fluids into and out of a surgical site through couplers and the hollow tube **404**.

[**0224**] In FIG. **15**A, the IAB robotic surgical tool **1500**A includes a three-way coupler **1206** mounted to the interface base **412**. A proximal end of the hollow tube **404** couples to a first port of the three-way coupler **1206**. Replaceable hoses **106**A-**106**B respectively couple to a second and a third port of the three-way coupler **1206**. The tool **1500**A may further include the printed circuit board **425** with the electrical pins **424** in one or more interrelated circuits **426** coupled thereto to indicate the tool type and that external fluid control is to be utilized.

[**0225**] In FIG. **15**B, the IAB robotic surgical tool **1500**B includes a four-way coupler **1506** with a first port coupled to the hollow tube **404**, a second port coupled to an end of a first hose **106**A, a third port coupled to an end of a second hose **106**B, and a fourth port coupled to an end of a third hose **106**C. Tool **1500**B may also include the printed circuit board **425** with the electrical pins **424** and the one or more integrated circuits **426** coupled thereto to indicate the tool type and that external fluid control is to be utilized to control the flow of fluids flow in the hoses **106**A-**106**C.

[**0226**] Cleaning and sterilization of the IAB robotic surgical tools **1500**A-**1500**B is fairly easy as there are no valves. To reuse the tools **1500**A-**1500**B, used hoses **106**A-**106**C are removed. The remaining portions of the tools **1500**A and **1500**B, such as the couplers and the hollow tube **404**, are then sterilized and then fitted with new sterile hoses **106**A-**106**C so that they may be reused.

[**0227**] While IAB robotic surgical tools **1500**A-**1500**B have been shown and described to include couplers **1206**, **1506**, respectively, the couplers can be removed and provided externally to the surgical tools **1500**A-**1500**B. In which case, a single hose would be routed from the external coupler to the IAB robotic surgical tool. The single hose may couple to a hose fitting, that in turn would be coupled to the hollow tube **404**. Alternatively, the proximal end of the hollow tube could be formed as a hose fitting and directly couple to an end of the hose. In this manner, reuse of the IAB robotic surgical tool may further simplified with fewer components to sterilize and a single hose to replace.

User Control

[**0228**] Typically, irrigation and aspiration of a surgical site are manually controlled by an assisting surgeon or nurse using manual surgical tools. By allowing tele-operated or remote control and actuation of an IA or IAB robotic surgical instrument, the primary surgeon can now control irrigation and aspiration of a surgical site.

[**0229**] The flow control system of the IAB robotic surgical instrument may be controlled by the operator O seated at the robotic surgical master control console **150** in a number of ways. For example, master axes of movement in a control handle that is normally used for controlling a wristed robotic surgical instrument may be used to activate irrigation, aspiration, and or blowing through an IAB robotic surgical instrument over a surgical site. As previously discussed, one or a combination of both the rotational motion of the touch sensitive handle **325** and the squeezing motion of the grips **350**A,**350**B may be used to control the flow of fluids through the IAB robotic surgical tools. For example, the rotational motion of the touch sensitive handle **325** may be used for the control of irrigation while the squeezing motion of the grips **350**A,**350**B may be used for controlling suction in a surgical site.

[**0230**] FIG. **16**A is a side view of the touch sensitive handle **325** of the robotic surgical master control console **150**. The touch sensitive handle **325** may be used by the operator O to control the fluid flow in IAB robotic surgical instruments. In one embodiment of the invention, a rotational motion R ("roll") of the touch sensitive handle may control the irrigation, aspiration, and/or blowing through IAB surgical instruments **101**A, **400**. For example, the handle may rotated clockwise to open a first valve to have a fluid flow through the IAB surgical instrument into or out of a surgical site. The handle may then be rotated counter-clockwise to close the first valve and stop the flow of fluid through the IAB surgical instrument and into or out of the surgical site. A center detent point D of rotation in the touch sensitive handle **325** may be used to switch over from one type of fluid flow to another. In which case, the handle may rotated counter-clockwise to open a second valve or switch open the first valve to a different position to have a second fluid flow through the IAB surgical instrument and into or out of a surgical site. The handle **325** may then be rotated clockwise to the center detent point D to close the second valve and stop the flow of fluid through the IAB surgical instrument and into or out of the surgical site.

[**0231**] The rotational motion of the handle **325** may typically control wrist motors in the robotic surgical manipulator **152** to control a wrist motion of a robotic surgical tool. In this case, the wrist motors in the robotic surgical manipulator **152** may be adapted for use to control

one or move valves in the IAB robotic surgical instruments in response to the rotational motion of the handle **325**.

[**0232**] In another embodiment of the invention, a gripping or squeezing motion ("master grip") on the grips **350**A-**350**B of the touch sensitive handle **325** may be used to control the flow of fluids through IAB robotic surgical instruments. For example, squeezing the grip of touch sensitive handle may be used to turn on the suction of the I/A/B surgical instrument and the grip released to turn off the suction. In which case, the touch sensitive handle may include one or more springs **306**A-**306**C to provide differing spring constants or a single spring **306** with a progressive rate spring constant as the positions of the grips **350**A-**350**B change. An explanation as to how the touch sensitive handle **325** functions was previously describe with reference to FIG. **3**C. By using the grip of the touch sensitive handle **325** to control the IAB robotic surgical instrument, the rotational motion of the handle may be used for further movement or control of the instrument.

[**0233**] The position of the grips **350**A-**350**B can vary over a range of positions in order to control suction, blowing and irrigation of a surgical site such as from a fully released or fully open position to a fully squeezed or fully closed position.

[**0234**] FIGS. **16**B-**16**D illustrate different positions of the grips **350**A-**350**B of the touch sensitive handle **325** when squeezed by a hand H of the operator O to control the IAB robotic surgical tool at a surgical site. FIG. **16**B illustrates a fully open grip position without any squeezing by the hand H. FIG. **16**C illustrates the hand H squeezing the grips **350**A-**350**B to a half-way closed position. To provide force feedback to a user, a first spring rate may be used over a range of positions, such as from the fully open to the half-way closed position. FIG. **16**D illustrates the hand H squeezing the grips **350**A-**350**B to a fully closed position. To provide force feedback to a user, a second spring rate somewhat greater than the first may be used over a range of positions, such as from the half-way closed position to the fully closed position.

[**0235**] FIG. **17** is a graph showing exemplary control of irrigation and aspiration using the grip control of the touch sensitive handle **325**. The open, half, and closed positions along the X-axis of the graph correspond to the different positions of the grips **350**A-**350**B of the touch sensitive handle **325** illustrated in FIGS. **16**B-**16**D. Curve **1701** illustrates a flow of vacuum or a percentage of suction. Curve **1710** illustrates a flow of irrigation fluid through the tool and into a surgical site.

[**0236**] With the grips **350**A-**350**B in the fully released or fully open position, both suction and irrigation are turned off. As the grip is initially squeezed, suction is turned on and irrigation remains turned off. As the grip position changes from fully-open to half-way closed, curve **1701** illustrates the flow of vacuum change from zero to one hundred percent. As the grip reaches half way, suction may be fully turned on with a negligible amount of irrigation. As the operator O squeezes further still, past the half-way closed position, the vacuum flow tapers off toward zero and the irrigation begins from zero around the three-fourths closed position, as is illustrated by curves **1701** and **1710**.

[**0237**] In another embodiment of the invention, both the rotational motion of the touch sensitive handle **325** and the squeezing motion of the grips **350**A,**350**B may be used to control the flow of fluids through the IAB robotic surgical tools.

[**0238**] In addition to the touch sensitive handle **325** and its grips **350**A-**350**B, foot pedals **18** of the surgeons master control console **150**, as illustrated in FIG. **3**A, may be used to further control the IAB robotic surgical tools. For example, one of the foot pedals **18** may be used to switch from suction control to blow control in order to blow a pressurized gas over the surgical site. In which case, a gripping squeezing motion of the touch sensitive handle can also control the blowing provided by the I/A/B surgical instrument.

[**0239**] Alternatively, the touch sensitive handle **325** may be modified to include buttons to activate irrigation, aspiration, and or blowing when an IAB robotic surgical tool is mounted to the robotic surgical manipulator **152**

[**0240**] To avoid using a touch sensitive handle, the foot pedals **18** of the surgeons master control console **150** may be used to fully control the suction and irrigation provided by an IAB robotic surgical tool. In one embodiment of the invention, a first foot pedal **18**A may be used to control suction and a second foot pedal **18**B may be used to control the irrigation provided by an IA or IAB surgical instrument.

[**0241**] With knowledge of other surgical instruments that are to be controlled by some of the foot pedals, foot pedals on the right side of the footrest may be used, for example. Two pedals and a toggle switch on the master control console or the control handle may be used to control a variety of actuations in a plurality of surgical instruments knowing the context of the robotic surgical system in advance. Additionally, foot pedals normally used for cautery (or another energy device) may be switched to activate irrigation, aspiration, and or blowing when an IAB robotic surgical tool is mounted to the robotic surgical manipulator **152**.

[**0242**] To avoid any use of hands or feet in controlling the I/A surgical instrument, voice activation may be used to activate irrigation, aspiration, and or blowing when an IAB robotic surgical tool is mounted to the robotic surgical manipulator **152**. In this case, an operator's voice or speech may be used to control the suction, irrigation, and or blowing provided by an IA or IAB surgical instrument. For example, spoken voice commands such as "suction ON", "suction OFF", "suction lightly", "irrigation ON", "irrigation OFF", and "irrigate lightly" may be used to control the suction and irrigation provided by the IA or IAB surgical instrument.

[**0243**] To recognize the voice commands, the master control console **150** includes a microphone **315** and a speech recognizer **317**. The speech recognizer **317** may generate the control signals that are provided to the IA or IAB surgical instrument.

[**0244**] While various control means have been individually described here, two or more of these control means may be combined in order to control the flow of fluids through an IAB robotic surgical tool. For example, the rotational motion of the touch sensitive handle **325** may be used for the control of irrigation while the squeezing motion of the grips **350**A,**350**B may be used for controlling suction in a surgical site.

User Feedback

[0245] Within a surgical site it may be difficult to determine if a valve is open and providing suction, blowing, or irrigation. User feedback may be provided to the surgeon at the console to provide information to him/her such as suction is on and at what level—high, medium, low, or otherwise off. User feedback information may also be provided regarding blowing and irrigation—whether its off or on, and if on at what level—high, medium, or low. However, it typically is easier to visually determine when a liquid is flowing for irrigation than when suction is provided for aspiration or a pressurized gas for blowing.

[0246] Referring now to FIGS. **18**A-**18**G, various types of user feedback may be provided to the IAB robotic surgical tools.

[0247] In FIG. **18**A, the irrigation/aspiration/blowing robotic surgical tool **400**A includes a pair of light emitting diodes (LEDs) **1801**-**1802** near the tip **406** of the hollow tube **404** in order provide visible feedback to an operator O that a fluid is flowing through the tool. One or more wires **1804** may couple between the light emitting diodes **1801**-**1802** and the printed circuit board **425** within the mountable housing **401**. Electrical signals can be transmitted towards the light emitting diodes from the printed circuit board to turn them on during the flow of fluids and off when no fluid flow occurs. The integrated circuit **426** may generate the electrical signals to control the light emitting diodes. In this manner, the light emitting diode **1801**-**1802** may be activated by control signals received over the one or more wires **1804** from the master control console **150**. Additional light emitting diodes may be provided near the tip **406** of the hollow tube **404** in order provide additional visible feedback for additional fluid flows. Moreover, the light emitting diodes **1801**-**1802**, including any additional LEDs, may emit photons of different wavelengths in order that different colors can be provided corresponding to different types of fluid flow (e.g., suction, irrigation, gas pressure).

[0248] In FIG. **18**B, the IAB robotic surgical tool **400**B includes a light pipe **1812** mounted externally to the hollow tube **404** to provide visible user feedback to the operator O that fluids are flowing into or out of the surgical site. The light pipe **1812** maybe a side lighting fiber optic cable with one end optically coupled to one or more light emitting diodes **1811** to receive photons. The light emitting diodes **1811** may emit photons of different wavelengths in order that different colors can be provided corresponding to different types of fluid flow (e.g., suction, irrigation, gas pressure). One or more wires **1814** may couple between the one or more light emitting diodes **1811** and the printed circuit board **425** mounted within the housing **401**. An integrated circuit, such as integrated circuit **426**, may be used to drive the one or more light emitting diodes **1811** to turn them on or off. Alternatively when fluids flow, the one or more light emitting diodes **1811** may be activated directly by control signals received over the one or more wires **1814** from the master control console **150** or from the integrated circuit **426**. More than one light pipe **1812** may be provide along the circumference of the hollow tube **404** so that the side light may be visible at different viewing angles and positions of the IAB robotic surgical instrument.

[0249] In comparison with the light emitting diodes **1801**-**1802** at the tip, the light pipe **1812** provides a light that maybe visible along the entire length of the hollow tube **404** so that it can be seen, regardless of the position of the tip. Additionally, the light emitting diode **1811** is protected under the cover of the mountable housing **401**.

[0250] Referring now to FIG. **18**C, an IAB robotic surgical tool **400**C is illustrated. In tools **400**A-**400**B previously described, user feedback was provided by electro-optic means. In contrast, the user feedback provided by the tool **400**C is provided mechanically. The IAB robotic surgical tool **400**C includes a sliding sleeve **1820** and a visible scale **1824** coupled to the hollow tube **404**. The sliding sleeve **1820** is coaxial with the hollow tube **404** and covers over the scale **1824** when no fluid is flowing through the tool. The sliding sleeve **1820** can be slid along the hollow tube **404** and into the housing **401** to reveal the visible scale **1824** as fluids flow through the tool **400**C. The visible scale **1824** maybe different colored bands to indicate the level of fluid flow within the tool **400**C. Alternatively, the visible scale **1824** maybe bands of different thickness to reveal the amount of fluid flow within the tool **400**C. The sliding sleeve **1820** can be gradually received into the hosing **401** to reveal the appropriate scale in proportion to the amount of fluid flow in the tool **400**C.

[0251] Without any flow of fluids within the tool **400**C, a tip **1822** of the sliding sleeve **1820** may completely cover over the visible scale **1824**. With maximum fluid flow in the tool **400**C, the sliding sleeve **1820** may be slid into the housing **401** such that its tip moves to a position **1822'** to fully reveal the visible scale **1824**. The opposite end **1823** of the sliding sleeve **1820** moves inward to position **1823'**. In this manner, the level of fluid flow in the tool **400**C maybe provided to a user by mechanical means.

[0252] The sliding sleeve **1820** may be pulled into the housing **401** and pushed back out in a variety of ways. A spring may used to apply a force against the retraction of the sliding sleeve **1820** into the housing so that it can push it back out after the pulling force is released. A cable with one end coupled to and wrapped around a take up drum may be coupled to the sleeve **1820** through a pulley in order to pull the sleeve into the housing **401**. A gearing system may alternatively be used. A pinion gear may couple to a rotatable receiving element **418** and to a rack coupled to the sleeve **1820**. Alternatively, a ball screw and a lead screw may be used. A slider with a crank or lever arm may be used. An electrical means may also be used, such as a solenoid to pull in on the sliding sleeve **1820**.

[0253] Referring now to FIGS. **18**D-**18**G, an IAB robotic surgical tool **400**D includes another mechanical structure to provide user feedback. However instead of a sliding sleeve, the IAB robotic surgical tool **400**D includes a rotating sleeve **1820'** coaxial with the hollow tube **404**. FIGS. **18**E-**18**G illustrate various types of tips **406** and sleeves **1820**A'-**1820**C' that may be used to provide user feedback.

[0254] In FIG. **18**D, the IAB robotic surgical tool **400**D includes the hollow tube coupled to the solid valve body **1101**,**1101'** mounted to the interface base **412**. The tool **400**D further includes the hollow rotatable sleeve **1820'** coaxial around the hollow tube **404**. The rotatable sleeve **1820'** couples to a bearing assembly **1852** mounted to the collar **1102** to rotatably mount to the interface base **412**.

[0255] For rotational purposes, the rotatable sleeve **1820'** includes a drum **1854** that extends from the bearing assem-

bly **1852** into the housing **401**. There are a number of ways to couple a rotational movement from the surgical manipulator to the rotatable sleeve **1820'**. In one embodiment of the invention, the tool **400**D is backward compatible and includes a spool **1830** rotatably mounted to the interface base **412**. A rotatable receiving element **418** of the IAB robotic surgical tool is coupled to the spool **1830**. For robotic control from the master control console **150**, the rotatable receiving element **418** couples to the rotatable driver **234** by means of the pins **422**A-**422**B within the openings **240**A-**240**B, respectively.

[**0256**] Coupled between the spool **1830** and the drum **1854** of the rotatable sleeve are a top cable **1832** and a bottom cable **1834**. One end of each cable couples to the spool **1830**. The opposite end of each cable couples to the drum **2854**. Alternatively, a single cable may be used by appropriately wrapping it around the drum **2834** and the spool **1830**. The top cable and the bottom cable wrap different from each other around the spool. They also wrap different from each other around the drum **1854**. In this manner, one cable is being let out while the other cable is being taken in by the rotation of the spool. **1854**. If the spool **1854** is turning clockwise as indicated by arrow F**2**, the cable **1832** is taken in, the cable **1834** is let out, and the sleeve **1820'** rotates counter clockwise as illustrated by the letter G**2**. If the spool **1854** is turning counter-clockwise as indicated by arrow F**1**, the cable **1832** is let out, the cable **1834** is let out, and the sleeve **1820'** rotates clockwise as illustrated by the letter G**1**.

[**0257**] There rotational movement of the receiving element **418** may be transmitted by other means to the rotatable sleeve **1820'**. For example, a gear system may be used. In which case, a first worm gear may be used in place of the spool **1830** and a second worm gear coupling to the first may be used in place of the drum **1854**.

[**0258**] The flow control system provided by the solid valve bodies **1101**,**1101'** and their valves was previously described with reference to FIGS. **11**A-**11**E and is incorporated here by reference.

[**0259**] Referring now to FIG. **18**E, the hollow rotatable sleeve **1820**A' includes a plurality of narrow openings **1840** located around a circumference of a distal end of the sleeve **1820**A'. This way, the scale may be seen from different angles. The narrow window openings **1840** may be oval shaped as illustrated or rectangularly shaped. The hollow tube **404** includes a plurality of curved color stripes **1842** around its circumference that may be rectangularly shaped as illustrated by the dashed lines in FIG. **18**E. As the sleeve **1820**A' rotates, the stripes **1842** are positioned on the hollow tube **404** to be substantially aligned with the window openings **1840**.

[**0260**] In one position of the sleeve **1820**A', no color stripe or a color stripe representative of fluid flow being completely shut off is located within a window opening **1840**. This corresponds to all the valves being closed to shut off the fluid flow through the IAB robotic surgical tool. Rotating the sleeve **1820**A' from a shut off position, a first or second color stripe may begin to be revealed, such as illustrated in FIGS. **18**E-**18**G, representative of a first fluid flow in an IAB robotic surgical instrument. The level of fluid flow can be indicated by the amount of color stripe **1842** that is exposed in the window opening **1840**. With the color stripe **1842** being completely exposed by the window opening **1840**, the corresponding valve of the flow control system may be fully open. With the sleeve **1820**A' being rotated still further, a second or third color stripe may begin to be exposed by the window opening **1840**. In which case, the prior fluid flow may be substantially shut off and another valve opened to allow another fluid to flow through the IAB robotic surgical tool.

[**0261**] The different color stripes **1842** indicate the flow of different fluids through the IAB robotic surgical. For example, a red color stripe may indicate that all fluid flows are fully shut off. A green color stripe may indicate pressurized gas flow. A blue color stripe may indicate irrigation, An orange color stripe may indicate suction or aspiration.

[**0262**] Referring now to FIG. **18**F, the tool **400**D includes the rotatable sleeve **1820**B' that is similar to the rotatable sleeve **1820**A' but has triangular shaped window openings **1850** instead. The hollow tube **404** includes the plurality of color stripes **1842**. But for the shape of the window openings, the sleeve **1820'**B operates substantially similar to that of sleeve **1820**A' described previously.

[**0263**] Referring now to FIG. **18**G, the hollow rotatable sleeve **1820**C' includes a plurality of narrow rectangular openings **1860** located around a circumference of a distal end. With the plurality of openings **1860**, the scale may be seen from different angles and positions of the tool. The narrow window openings **1860** are rectangularly shaped. However, the hollow tube **404** includes a plurality of triangle stripes **1842** curving around its circumference as illustrated by the dashed lines in FIG. **18**G. The colored triangle stripes **1862** are positioned on the hollow tube **404** to be substantially aligned with the window openings **186**, as the sleeve **1820**C' rotates,

[**0264**] As the sleeve **1820**C' rotates, the level of fluid flow can be indicated by the amount of color triangular stripe **1862** that is exposed in the window opening **1860**. As discussed previously, the type of fluid flow may be indicated by the different colors.

[**0265**] The type of user feedback previously disclosed was implemented by the IAB robotic surgical tool. Alternatively, user feedback may be provided by the master control console **150**, such as through an electronic visual display of a graphical icon or image.

[**0266**] Referring now to FIG. **19**, a simulated 3D image of a surgical site in a viewer **312** of the master control console **150** is illustrated when the operators eyes are in the viewer **312**. As illustrated in FIGS. **20**A-**20**B, stereo optic images of a left image **1900**L and a right image **1900**R are provided at the viewer **312**, in order to provide a three-dimensional image when viewed by the operator O. In the left and right views, the IAB robotic surgical tool **400** is located within the surgical site. To provide user feedback as to the fluid flow in the tool **400**, icons **1902** are overlaid onto the images displayed in one or both of the displays **1900**L, **1900**R. The icons may use different colors overlaid on the image in order to display the function of the tool **400**. A scale maybe provided in the viewer to display the level of the fluid flow in the tool **400**. Alternatively abbreviated letters maybe used to indicate the type of fluid flow (e.g., S—suction or A—aspiration, I—irrigation, B—blowing) in the tool **400** as well as its level, such as L, M, and H.

[0267] Referring now to FIG. **20**A, a viewer **312**A of the master control console **150** is illustrated. To provide a three-dimensional perspective, the viewer **312**A includes stereo images for each eye including left image **400**L of the tool **400** and surgical site and a right image **400**R of the tool **400** and surgical site. One or more icons **2010**R may be overlaid onto the images in the right viewfinder **2001**R to indicate the functionality and the level of fluid flow in the IAB robotic surgical tool **400**. The images **400**R and **400**L in the viewfinders maybe provided by a right liquid crystal display **2002**R and a left liquid crystal display **2002**L, respectively.

[0268] As the one or more icons **2010**R in the viewer **312**A are provided in a single viewfinder of the stereo viewer, they are displayed as two-dimensional icons. However, three dimensional images of the icons maybe provided and overlaid onto stereo left and right images of the surgical site.

[0269] In FIG. **20**B, one or more icons to provide user feedback of the control of the IAB robotic surgical tool are overlaid onto both the left image **400**L and right image **40**R of the surgical site. In the right viewfinder **2001**R, a right icon image **2010**R is overlaid onto the right image **400**R being displayed by the liquid crystal display **2002**R. In the left viewfinder **2001**L, a left icon image **2010**L is overlaid onto the left image **400**L of the surgical site provided by the liquid crystal display **2002**L. In this manner, a stereo image of the icons may be used to provide user feedback of the control of the IAB robotic surgical tool maybe provided in the viewer **312**B.

Exemplary Operation of the IAB Robotic Surgical Instruments

[0270] In order to use the IAB robotic surgical tools, it is first undergoes an initial setup prior to surgery. The IAB robotic surgical instrument is mounted to a robotic arm **153** of the robotic surgical manipulator **152**. One or more hoses **160**A-**160**C are coupled from the IAB robotic surgical instrument to one or more pumps **102**A-**102**C. The robotic surgical manipulator **152** is oriented with the patient P so that the tip of the hollow tube of the irrigation-aspiration robotic surgical instrument may be inserted into the patient near the desired surgical site. During the surgery, the operator O may control the flow of fluids between the surgical site and the IAB robotic surgical instrument from the master control console **150** using the flow control system **417** of the IAB robotic surgical tool. Alternatively or conjunctively, the operator may also control the flow of fluids between the IAB robotic surgical instrument and the one or more pumps. To control the flow of fluids, the operator O at the master control console **150** may generate one or more control signals to control the IAB robotic surgical instrument. The one or more control signals may be directly or indirectly coupled into the IAB robotic surgical instrument. For example, the one or more control signals may be electrical signals that are directly coupled into the IAB robotic surgical instrument to electrically control one or more valves. Alternatively, the one or more control signals may be electrical signals that are translated into a mechanical motion. In this case, the mechanical motion may be directly coupled into IAB robotic surgical instrument while the electrical control signals are indirectly coupled into the IAB robotic surgical instrument. In any case, one or more valves in the IAB robotic surgical instrument may be opened to flow one or more fluids over a surgical site in response to the control signals. Similarly, one or more valves in the IAB robotic surgical instrument may be closed to reduce the flow of the one or more fluids over the surgical site in response to the control signals.

[0271] In alternative embodiments of the invention, the control of the flow of fluids between the surgical site and the IAB robotic surgical instrument is provided by controlling the one or more pumps. In which case, the control signals are coupled to the pumps and/or flow control valves located external to the IAB robotic surgical instrument. The IAB robotic surgical instrument may include a coupler to couple between the hoses from the one or more pumps and the hollow tube that is inserted into a patient.

[0272] The one or more control signals may be generated in various ways including in response to movement of a touch sensitive handle of a master control console, squeezing of a grip of the touch sensitive handle, rotation of the touch sensitive handle, movement of a foot pedal, or a spoken command at the master control console.

[0273] The level of flow of the fluids and the control thereof may be monitored between the surgical site and the IAB robotic surgical instrument through the user-feedback means previously described. One user-feedback means is one or more light emitting diodes coupled near the tip of the hollow tube of the IAB robotic surgical instrument. The one or more light emitting diodes generate a visible light in response to the control of a flow of a fluid through the IAB robotic surgical instrument. Another user-feedback means is a light pipe coupled along the length of the hollow tube of the irrigation-aspiration robotic surgical instrument with a light emitting diode. The light emitting diode couples photons into the light pipe and generates a visible side light in response to the control of a flow of a fluid through the irrigation-aspiration robotic surgical instrument. Still another user-feedback means is a sliding sleeve coaxial with the hollow tube and a scale coupled to the irrigation-aspiration robotic surgical instrument. The sliding sleeve slides along the hollow tube and reveals the scale in response to the control of a flow of a fluid through the irrigation-aspiration robotic surgical instrument.

[0274] After the using the IAB robotic surgical instrument, it is removed from the patient and can then be dismounted from the robotic arm of the robotic surgical manipulator **152**. If the IAB robotic surgical instrument is to be reused, a modular valve assembly and one or more hoses of the irrigation-aspiration robotic surgical instrument may be discarded and the remaining components of the IAB robotic surgical instrument sterilized for reuse. In the case that the IAB robotic surgical instrument includes a flow control system with an inexpensive valve subassembly, the irrigation-aspiration robotic surgical instrument can be removed from the patient; dismounted from the robotic arm; and then discarded.

[0275] While certain exemplary embodiments of the invention have been described and shown in the accompanying drawings, it is to be understood that such embodiments are merely illustrative of and not restrictive on the broad invention, and that the embodiments of the invention not be limited to the specific constructions and arrangements shown and described, since various other modifications may occur to those ordinarily skilled in the art. For example,

while an irrigation/aspiration/blowing robotic surgical instrument has been shown and described in a number of embodiments of the invention, it may be modified into an irrigation robotic surgical instrument with a single valve to provide irrigation only or it may be modified into an aspiration robotic surgical instrument with a single valve to provide aspiration only. Furthermore, while aspiration or suction has been described as being provided by a vacuum pump, one would recognize that a pressurized gas maybe provided instead, such as air by an air pump. The pressurized gas may be used to blow debris or cut tissue, if sufficient pressure is provided. Rather, the embodiments of the invention should be construed according to the claims that follow below.

What is claimed is:

1. A robotic surgical system comprising:

a master control console to generate control signals to cause one or more fluids to flow into or out of a surgical site;

a surgical manipulator coupled to the master control console to receive the control signals, the surgical manipulator including

at least one robotic arm to manipulate at least one surgical instrument, and

a surgical instrument coupled to the robotic arm, the surgical manipulator to control the surgical instrument in response to the control signals to control the flow of the one or more fluids into or out of the surgical site, the surgical instrument having

a first robotically controlled valve responsive to the surgical manipulator, the first robotically controlled valve having a first port and a second port, and

a hollow tube having a first end coupled to the second port of the first robotically controlled valve, the hollow tube having an opening at a second end to direct the flow of one or more fluids into or out of the surgical site;

a first pump having a pump port, the first pump to pump a first fluid into or out of the surgical site; and

a first hose having a first end coupled to the first port of the first robotically controlled valve and a second end coupled to the pump port of the pump, the first hose to transport a first fluid between the first robotically controlled valve and the pump.

2. The system of claim 1, wherein

the first pump is a suction pump to create a vacuum in the first hose as the first fluid to aspirate the surgical site in response to opening the first robotically controlled valve.

3. The system of claim 1, wherein

the first pump is a fluid pump to pressurize a liquid in the first hose as the first fluid to irrigate the surgical site in response to opening the first robotically controlled valve.

4. The system of claim 1, wherein

the first pump is a compressor to pressurize a gas in the first hose as the first fluid to blow a pressurized gas in the surgical site in response to opening the first robotically controlled valve.

5. The system of claim 1, wherein

the first robotically controlled valve is responsive to the control signals from the master control console, and

the master control console includes at least one foot pedal to generate the control signals to control the first robotically controlled valve.

6. The system of claim 1, wherein

the first robotically controlled valve is responsive to the control signals from the master control console, and

the master control console includes a touch sensing handle to generate the control signals to control the first robotically controlled valve.

7. The system of claim 1, wherein

the first robotically controlled valve is responsive to the control signals from the master control console, and

the master control console includes a voice recognition system to recognize commands to generate the control signals to control the first robotically controlled valve.

8. The system of claim 1, wherein

the first robotically controlled valve is a three-way valve having a third port;

and,

the system further comprises

a second hose having a first end coupled to the third port of the first robotically controlled valve;

and

a second pump having a port coupled to a second end of the second hose.

9. The system of claim 8, wherein

the first pump is a suction pump to create a vacuum in the first hose and to aspirate the surgical site in response to opening the first robotically controlled valve to couple the first port and the second port together, and

the second pump is a fluid pump to pressurize a fluid in the second hose to irrigate the surgical site in response to opening the first robotically controlled valve to couple the first port and the third port together.

10. The system of claim 8, wherein

the first pump is a gas compressor to create a gas pressure in the first hose and to blow a pressurized gas in the surgical site in response to opening the first robotically controlled valve to couple the first port and the second port together, and

the second pump is a fluid pump to pressurize a fluid in the second hose to irrigate the surgical site in response to opening the first robotically controlled valve to couple the first port and the third port together.

11. The system of claim 1, wherein

the first robotically controlled valve is a four-way valve having a third port and a fourth port;

and,

the system further comprises

a second hose having a first end coupled to the third port of the first robotically controlled valve;

a third hose having a first end coupled to the fourth port of the first robotically controlled valve;

a second pump having a port coupled to a second end of the second hose;

and

a third pump having a port coupled to a second end of the third hose.

12. The system of claim 11, wherein

the first pump is a suction pump to create a vacuum in the first hose and to aspirate the surgical site in response to opening the first robotically controlled valve to couple the first port and the second port together,

the second pump is a fluid pump to pressurize a fluid in the second hose to irrigate the surgical site in response to opening the first robotically controlled valve to couple the first port and the third port together, and

the third pump is a gas compressor to create a gas pressure in the first hose and to blow a pressurized gas in the surgical site in response to opening the first robotically controlled valve to couple the first port and the fourth port together.

13. The system of claim 1, wherein

the surgical instrument further has

a second robotically controlled valve having a first port and a second port,

a third robotically controlled valve having a first port and a second port, and

a four-way coupler coupled between the second ports of the first, second, and third robotically controlled valves and the first end of the hollow tube;

and,

the system further comprises

a second hose having a first end coupled to the first port of the second robotically controlled valve;

a third hose having a first end coupled to the first port of the third robotically controlled valve;

a second pump having a port coupled to a second end of the second hose; and

a third pump having a port coupled to a second end of the third hose.

14. The system of claim 13, wherein

the first pump is a suction pump to create a vacuum in the first hose and to aspirate the surgical site in response to opening the first robotically controlled valve to couple the first port and the second port together,

the second pump is a fluid pump to pressurize a fluid in the second hose to irrigate the surgical site in response to opening the first robotically controlled valve to couple the first port and the third port together, and

the third pump is a gas compressor to create a gas pressure in the first hose and to blow a pressurized gas in the surgical site in response to opening the first robotically controlled valve to couple the first port and the fourth port together.

15. A robotic surgical system comprising:

a master control console to generate control signals to cause one or more fluids to flow into or out of a surgical site;

a surgical manipulator coupled to the master control console to receive the control signals, the surgical manipulator including

at least one robotic arm to manipulate at least one surgical instrument, and

a surgical instrument coupled to the robotic arm, the surgical manipulator to control the surgical instrument in response to the control signals to control the flow of one or more fluids into or out of the surgical site, the surgical instrument having

a first robotically controlled valve having a first port and a second port, the first robotically controlled valve responsive to the surgical manipulator to control the flow of a first fluid,

a second robotically controlled valve having a first port and a second port, the second robotically controlled valve responsive to the surgical manipulator to control the flow of a second fluid,

a hollow tube having a first end and a second end with an opening to direct the flow of a plurality of fluids into or out of the surgical site, and

a three-way coupler coupled between the second ports of the first and second robotically controlled valves and the first end of the hollow tube, the three way coupler to couple a plurality of fluids between the hollow tube and the first and second robotically controlled valves.

16. The system of claim 15, further comprising:

a first pump having a first pump port, the first pump to pump the first fluid into or out of the surgical site;

a second pump having a second pump port, the second pump to pump the second fluid into or out of the surgical site;

a first hose having a first end coupled to the first port of the first robotically controlled valve and a second end coupled to the first pump port of the first pump, the first hose to transport the first fluid between the first robotically controlled valve and the first pump; and

a second hose having a first end coupled to the first port of the second robotically controlled valve and a second end coupled to the second pump port of the second pump;

the second hose to transport the second fluid between the second robotically controlled valve and the second pump.

17. The system of claim 16, wherein

the first pump is a suction pump to create a vacuum in the first hose and to aspirate the surgical site in response to opening the first robotically controlled valve, and

the second pump is a fluid pump to pressurize a fluid in the second hose to irrigate the surgical site in response to opening the second robotically controlled valve.

18. The system of claim 15, wherein

the first robotically controlled valve and the second robotically controlled valve are responsive to the control signals from the master control console, and

the master control console includes at least one foot pedal to generate the control signals to control the first robotically controlled valve and the second robotically controlled valve.

19. The system of claim 15, wherein

the first robotically controlled valve and the second robotically controlled valve are responsive to the control signals from the master control console, and

the master control console includes at least one touch sensing handle to generate the control signals to control the first robotically controlled valve and the second robotically controlled valve.

20. The system of claim 15, wherein

the first robotically controlled valve and the second robotically controlled valve are responsive to the control signals from the master control console, and

the master control console includes a voice recognition system to recognize commands to generate the control signals to control the first robotically controlled valve and the second robotically controlled valve.

21. A robotic surgical system comprising:

a master control console to generate control signals to cause a fluid to flow into or out of a surgical site;

a surgical manipulator coupled to the master control console to receive the control signals, the surgical manipulator including

at least one robotic arm to manipulate at least one surgical instrument, and

a surgical instrument coupled to the robotic arm, the surgical instrument to control the flow of the fluid into or out of the surgical site, the surgical instrument having

a first hose having a first end and a second end, the first hose being flexible;

a first robotically controlled pinch valve to receive the first hose, the first robotically controlled pinch valve to squeeze and pinch closed the first hose and to release and open the first hose, and

a hollow tube having a first end to couple to the first end of the first hose;

and

a first pump having a port coupled to the second end of the first hose.

22. The system of claim 21, wherein

the first pump is a suction pump to create a vacuum in the first hose and to aspirate the surgical site at a second end of the hollow tube in response to releasing the first robotically controlled pinch valve.

23. The system of claim 21, wherein

the first pump is a fluid pump to pressurize a fluid in the first hose to irrigate the surgical site at a second end of the hollow tube in response to releasing the first robotically controlled pinch valve.

24. The system of claim 21, wherein

the first pump is a compressor to pressurize a gas in the first hose to blow a pressurized gas in the surgical site in response to opening the robotically controlled pinch valve.

25. The system of claim 21, wherein

the surgical instrument further has

a second robotically controlled pinch valve having a first port and a second port, and

a three-way coupler coupled between the second ports of the first and second robotically controlled pinch valves and the first end of the hollow tube; and,

the system further comprises

a second hose having a first end coupled to the first port of the second robotically controlled pinch valve;

and

a second pump having a port coupled to a second end of the second hose.

26. The system of claim 25, wherein

the first pump is a suction pump to create a vacuum in the first hose and to aspirate the surgical site in response to opening the first robotically controlled pinch valve, and

the second pump is a fluid pump to pressurize a fluid in the second hose to irrigate the surgical site in response to opening the second robotically controlled pinch valve.

* * * * *