April 6, 1926. 1,580,017

G. W. CONNOR

WASHING APPARATUS

Filed June 25, 1924 2 Sheets-Sheet 1

Fig. 1.

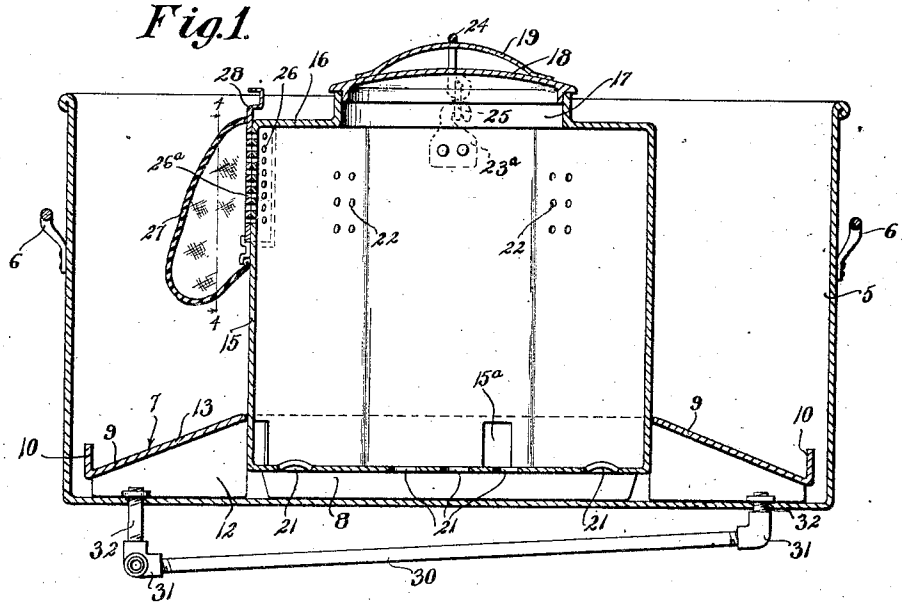

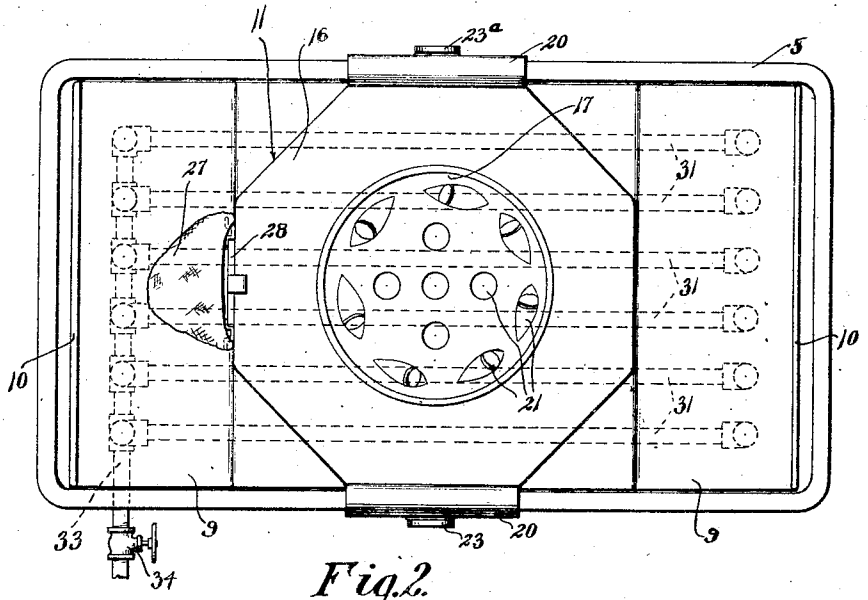

Fig. 2.

George W. Connor.

INVENTOR

BY Victor J. Evans.

ATTORNEY

WITNESS:

April 6, 1926. 1,580,017

G. W. CONNOR

WASHING APPARATUS

Filed June 25, 1924 2 Sheets-Sheet 2

Fig. 3.

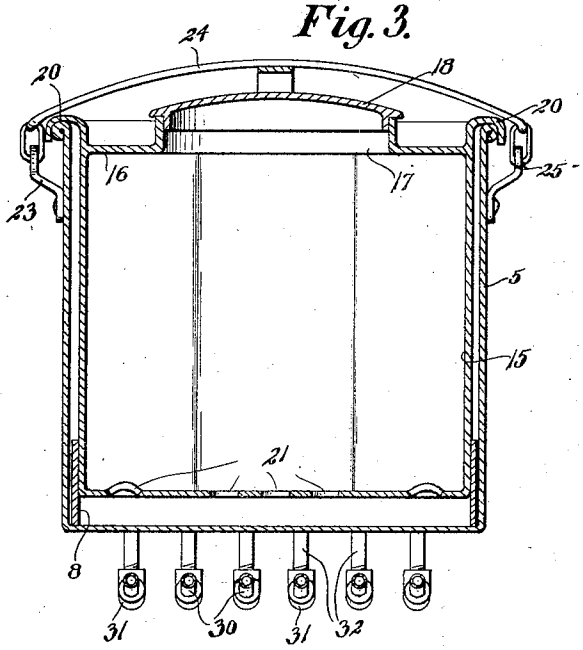

Fig. 4.

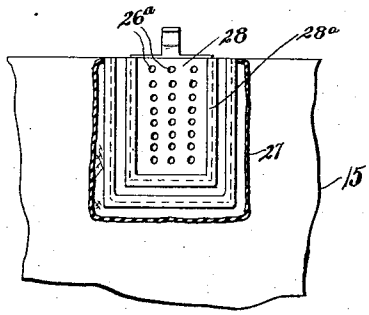

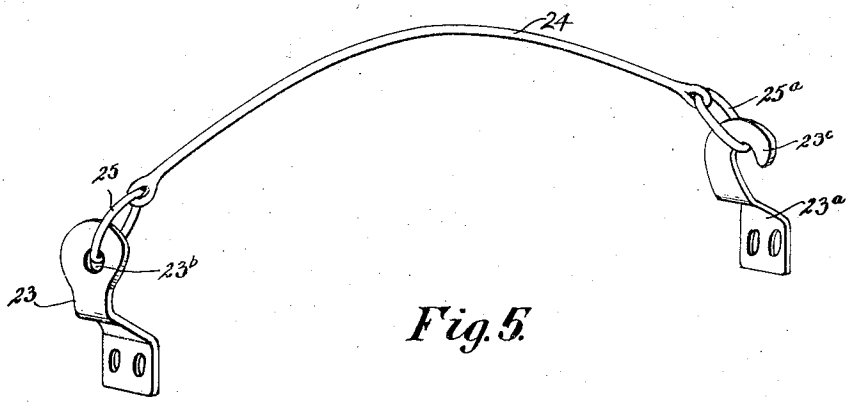

Fig. 5.

George W. Connor

INVENTOR

BY Victor J. Evans.

ATTORNEY

WITNESS:

Patented Apr. 6, 1926. 1,580,017

UNITED STATES PATENT OFFICE.

GEORGE W. CONNOR, OF ANDERSON, SOUTH CAROLINA, ASSIGNOR OF ONE-HALF TO JOSEPH K. BRAY, OF GREENVILLE, SOUTH CAROLINA.

WASHING APPARATUS.

Application filed June 25, 1924. Serial No. 722,375.

To all whom it may concern:

Be it known that I, GEORGE W. CONNOR, a citizen of the United States, residing at Anderson, in the county of Anderson and State of South Carolina, have invented new and useful Improvements in Washing Apparatus, of which the following is a specification.

This invention relates to washing apparatus and has for its object the provision of a combination boiler and canner, the principal feature being the provision of a false bottom which will prevent boiling of the water there above so that spilling will be prevented, this false bottom carrying a suds chamber or receptacle having overflow means which will insure a positive circulation of water through the suds chamber and through pipes mounted below the bottom of the device and connected with the end portions thereof.

Another object is the provision of a device of this character in which the suds chamber and false bottom may be removed when use of the boiler is desired for canning purposes or boiling cans packed with fruit and the like as is a well known process.

An additional object is the provision of a device of this character which will be simple and inexpensive in manufacture, positive in operation, efficient and durable in service and a general improvement in the art.

With the above and other objects and advantages in view the invention consists in the details of construction to be hereinafter more fully described and claimed and illustrated in the accompanying drawings, in which:

Figure 1 is a longitudinal section,

Figure 2 is a top plan view with the cover of the suds chamber removed,

Figure 3 is a cross section taken vertically at the center of the device,

Figure 4 is a detail section on the line 4—4 of Figure 1,

Figure 5 is a detail view of the removable bail mounting.

Referring more particularly to the drawings the numeral 5 designates a boiler of any ordinary or preferred type and of any desired size and shape depending upon the purpose to which the complete device is to be put. This boiler is represented as provided at its ends with conventional handles 6 whereby it may be lifted about.

Located within the boiler is a false bottom designated broadly by the numeral 7 and formed preferably from a single piece of sheet metal cut and bent to the desired shape. At its longitudinal side edges this false bottom member is formed with depending flanges 8 which rest upon the bottom of the boiler, and the end portions 9 are inclined downwardly and outwardly away from the center, the edges being upturned to define vertical flanges 10 which are spaced from the ends of the boiler. It will be observed that the vertical flanges 8 are disposed against the sides of the boiler. The main or top portion of the false bottom member is formed with an opening 11 which is here represented as being octagonal though it should be understood that it might be of any other desired shape. The opposite sides of the inclined portions 9 are extended downwardly to define flanges 12 which rest upon the bottom of the boiler in the same manner as the flanges 8.

Mounted within the central opening 11 in the false bottom is the suds receptacle or chamber 15 which has a portion of its top closed by a wall 16 and which has the central portion of its top open as shown at 17 and provided with a removable cover 18 having a handle 19. The opposite sides of this receptacle 15 are formed with outwardly rolled beads or hooks 20 which engage upon the top of the boiler 5 for properly supporting the suds receptacle within the boiler in spaced relation to the bottom thereof. This boiler has its bottom formed with holes 21 and likewise has its sides formed with perforations 22 which will permit communication between the suds chamber and the interior of the boiler.

The receptacle is here represented as octagonal in shape so as to fit conformingly within the opening 11 and is formed with a plurality of openings 15ª located in the side wall immediately above the bottom and at the corners, which openings are for the passage of water. Owing to the location of these openings at the corners, it is obvious that the sides of the receptacle will have somewhat of a baffle or deflector action upon the liquid passing therethrough.

In order to hold the cover on the receptacle and to maintain the receptacle in proper position within the boiler, I provide ears 23 and 23ª secured to the outside of the

boiler near the top thereof. The ear 23 is formed with a hole 23^b while the ear 23^a is formed with a slot defining a hook 23^c. The numeral 24 represents a bail which is equipped at one end with a ring or loop 25 engaged within the hole 23^b, and which is provided at its other end with a similar ring or loop 25^a detachably engageable with the hook 23^c.

Near its top one wall portion of the suds receptacle is formed with a perforated area 26 leading to or discharging into a filtering bag or the like 27 which is suspended within the boiler as shown. The numeral 28 represents a slide which is movably mounted in guides 28^a and which is adapted to cover this perforated area to a greater or less extent, the slide having perforations 26^a adapted to be brought into or out of registration with the perforations in the area 26.

Located beneath the bottom of the boiler is a series of inclined pipes 30 which have their ends equipped with elbows 31 with which are connected upwardly extending pipe sections 32 communicating with the interior of the boiler below the false bottom. The specific connection of the pipes 32 with the bottom of the boiler is a matter of mechanical detail and any preferred method may be employed. It should be stated that all of the pipes 30 are connected at one end by a pipe 33 which is prolonged beyond one side of the boiler and which is equipped with a cut off valve 34 which may be opened to permit draining of the entire device.

In the operation it will be seen that the articles to be boiled or washed are placed within the receptacle 15 together with a suitable quantity of soap or soap powder and water is poured either into the receptacle 15 or into the boiler 5. As the receptacle 15 is perforated at different points it makes no difference where the water is poured as it will naturally pass into the suds chamber and below at the same time. When heat is applied the water will of course become heated and will flow along the inclined pipes 30 and pass upwardly within the boiler and into the suds receptacle. At least a portion of the water bubbling up within the suds receptacle passes through the perforated area 26 into the filtering bag 27 and is consequently returned to the boiler for recirculation through the pipes 30.

After removing the bail 24 the entire suds receptacle may be lifted out of the boiler in case it is desired to use the apparatus for boiling cans of fruit, vegetables and the like.

From the foregoing description and a study of the drawings, it will be apparent that I have thus provided a very simply constructed, inexpensive and highly efficient washing and boiling apparatus which will satisfactorily perform all the functions for which it is intended and which has the added advantage of not being likely to get out of order.

While I have shown and described the preferred embodiment of the invention it is of course to be understood that I reserve the right to make such changes in the form, construction and arrangement of parts as will not depart from the spirit of the invention or the scope of the subjoined claims.

Having thus described my invention I claim:

1. In a device of the character described, a boiler having an open top, a suds receptacle of less width and length than the boiler disposed therein and formed at its sides with outwardly and downwardly extending flanges removably engaged upon the upper edge of the open top boiler, said suds receptacle having an opening in its top surrounded by an upstanding flange, a removable cover normally closing said opening in the suds receptacle, said suds receptacle having its bottom provided with openings and having its side walls formed near their upper ends with perforations, and a filtering bag mounted upon the outside of the suds receptacle and extending about a perforated area.

2. In a device of the character described, a boiler having an open top, a suds receptacle of less width and length than the boiler disposed therein and formed at its sides with outwardly and downwardly extending flanges removably engaged upon the upper edge of the open top boiler, said suds receptacle having an opening in its top surrounded by an upstanding flange, a removable cover normally closing said opening in the suds receptacle, said suds receptacle having its bottom provided with openings and having its side walls formed near their upper ends with perforations, and a filtering bag mounted upon the outside of the suds receptacle and extending about a perforated area, and a perforated plate member slidably mounted at the juncture of the bag with the suds receptacle for varying the size of the perforations and regulating the extent of communication between the interior of the suds receptacle and the filtering bag.

3. In a device of the character described, a boiler having an open top, a suds receptacle of less width and length than the boiler disposed therein and formed at its sides with outwardly and downwardly extending flanges removably engaged upon the upper edge of the open top boiler, said suds receptacle having an opening in its top surrounded by an upstanding flange, a removable cover normally closing said opening in the suds receptacle, said suds receptacle having its bottom provided with openings and having its side walls formed near their upper ends with perforations, and a filtering bag mounted upon the outside of the

suds receptacle and extending about a perforated area, and a member removably seated upon the bottom of the boiler and having an opening accommodating the suds receptacle, said member inclining downwardly and outwardly in every direction and terminating at its outer edge in upturned flanges.

4. A device of the character described comprising a boiler, a false bottom therein, a receptacle seated upon said false bottom and extending entirely across the boiler to divide the interior thereof into two compartments, said receptacle having its sides and bottom perforated and a plurality of inclined pipes located beneath the bottom of the boiler and having upturned ends communicating with the interior thereof outwardly of the receptacle, one end of the receptacle being provided near its top with a perforated area, a slide plate for closing said perforated area, and a filtering member located within the boiler into which water passing from said perforated area will flow.

In testimony whereof I affix my signature.

GEORGE W. CONNOR.