M. V. ANDERSON.

CANDELABRUM.

APPLICATION FILED NOV. 4, 1905. RENEWED AUG. 17, 1908.

904,111.

Patented Nov. 17, 1908.

2 SHEETS—SHEET 1.

Fig. 1.

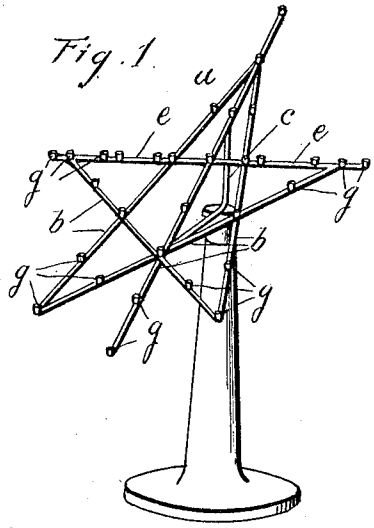

Fig. 2.

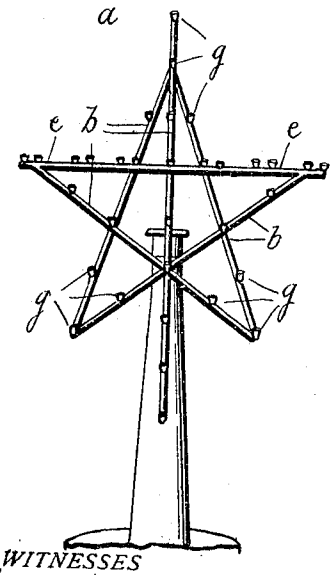

Fig. 3.

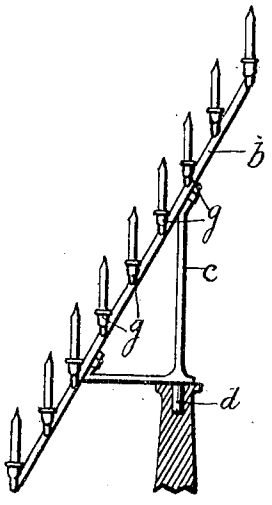

WITNESSES

George M. Anderson.

Isabell F. Barnes

INVENTOR

Mary V. Anderson

by E. W. Anderson

her Attorney

THE NORRIS PETERS CO., WASHINGTON, D. C.

M. V. ANDERSON.

CANDELABRUM.

APPLICATION FILED NOV. 4, 1905. RENEWED AUG. 17, 1908.

904,111. **Patented Nov. 17, 1908.**

2 SHEETS—SHEET 2.

Fig. 4.

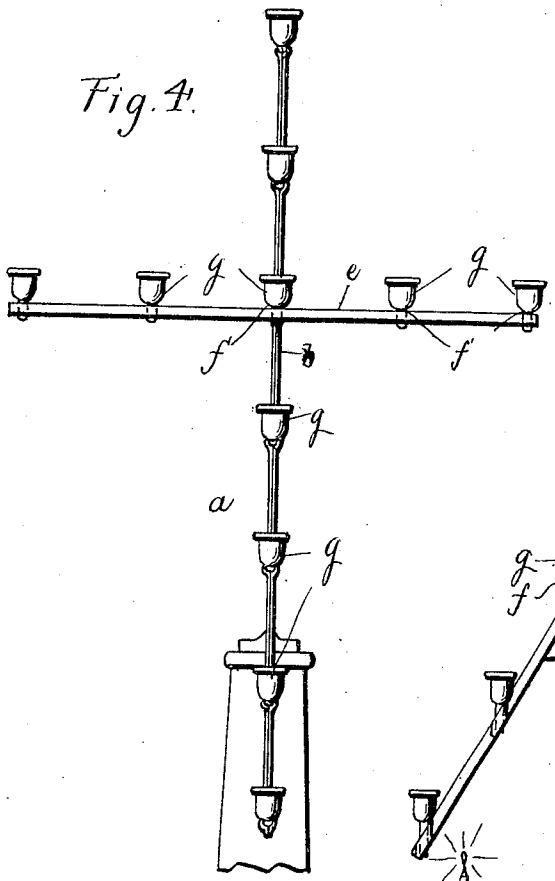

Fig. 5.

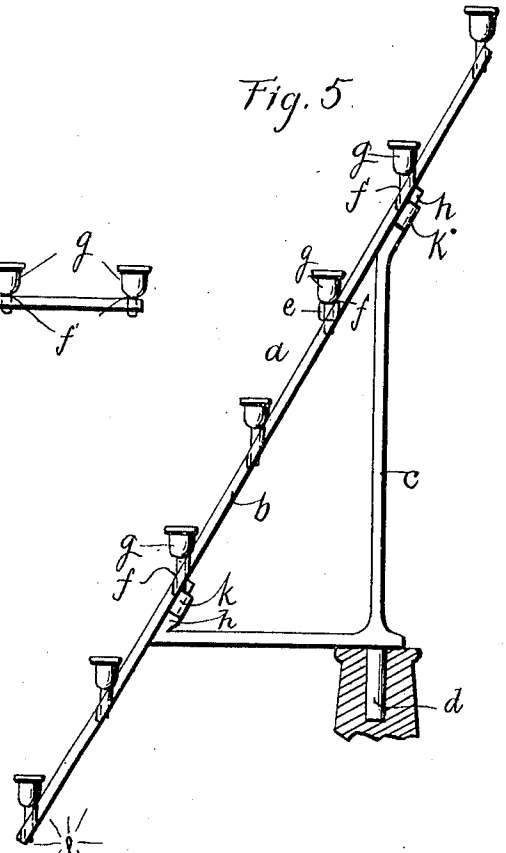

Fig. 6.

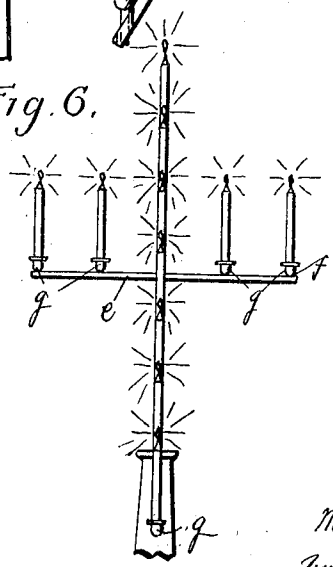

WITNESSES

George M. Anderson.

Isabell F. Barnes

INVENTOR

Mary V. Anderson

by E. W. Anderson

her Attorney

THE NORRIS PETERS CO., WASHINGTON, D. C.

UNITED STATES PATENT OFFICE.

MARY V. ANDERSON, OF WASHINGTON, DISTRICT OF COLUMBIA.

CANDELABRUM.

No. 904,111. Specification of Letters Patent. Patented Nov. 17, 1908.

Application filed November 4, 1905, Serial No. 285,882. Renewed April 17, 1908. Serial No. 427,707.

To all whom it may concern:

Be it known that I, MARY V. ANDERSON, a citizen of the United States, resident of Washington, in the District of Columbia, have made a certain new and useful Invention in Candelabra; and I declare the following to be a full, clear, and exact description of the same, such as will enable others skilled in the art to which it appertains to make and use the invention, reference being had to the accompanying drawings, and to letters or figures of reference marked thereon, which form a part of this specification.

The invention has relation to candelabra, designed chiefly for use in churches and public halls, and it consists in the novel construction, and combinations of parts, as hereinafter set forth.

The object of the invention is chiefly to provide ready means for exhibiting lights in the form of appropriate emblematic designs, such as a cross, a star, a heart, a vase, etc.

In the accompanying drawings illustrating the invention,

Figure 1 is a perspective view of a candelabrum constructed in accordance with my invention to show the figure of a star and of a cross; Fig. 2 is a front elevation of the same; Fig. 3 is a side elevation of the same on a little larger scale, and partly in section, showing the candles; Fig. 4 is a front elevation of a candelabrum constructed in accordance with my invention to show the figure of a cross; Fig. 5 is a side elevation of the same, partly in section; and Fig. 6 is a front elevation of the same on a smaller scale, with the candles in place therein and ignited.

In these drawings the letter *a*, designates a frame having face portion of high inclination consisting of series of sockets or light holders, arranged in different vertical planes back of each other and at different heights rising from front to rear in position to mark the outline of an ornamental figure or symbol, in an elongated manner so that it will appear of normal proportions in front view.

The frame *a* may consist of the inclined bars *b*, connected to each other and to a base *c*, which may be provided with a column or pedestal or with an arm or a stem or tenon, *d*, for attachment to a pedestal or holder.

The inclined bars *b*, are generally connected by braces or bars *e*, and all the bars and braces are designed to be in or nearly in the same plane. At the intersections of the inclined bars *b*, with the brace bars *c*, and along the bars and braces are located attachment sockets *f*, for the light holders *g*, or the light holders may be directly connected to the bars and braces. The actual distance between adjacent light holders along the incline of the face are greater than the apparent distances when viewed from the front, and are greater than the lateral distance between adjacent light holders along the horizontal, which is designed to be substantially equal to such apparent distances, this rule being observed in order to provide for regularity in the distribution of the lights in outlining the figure when seen from the front, as they will appear from that point of view, to be all in the same vertical plane and at proper distances from each other to show the figure in its normal proportions.

A further object is to separate the light holders, which are designed to show lights in line or nearly so one above another, as much as possible, by intervals from front to rear, in order to avoid softening or melting the body portions of the candles in the holders. As these candles are designed to be of equal length throughout the series, and are usually longer than the distances between the candle holders on the inclined plane, this feature is of special importance, and while the inclination of the planular assemblage of candle holders is designed to approximate the vertical plane, it is also designed to provide sufficient distance between the candles from front to rear to prevent the candles in rear from being melted by the flames in front of them. To this end, the distance between adjacent light holders along the horizontal is taken as the standard distance, and the distances between adjacent light holders along lines of inclination are proportionately greater, according to the variation of such angles of inclination from the horizontal. In other words, the distance between any two adjacent light holders in a horizontal line, represents the long side of a right angle triangle, of which the distance between any two adjacent light holders in a line at right angles to said horizontal line is the hypotenuse, and the distance between any two adjacent light holders in a line at any other angle to the horizontal is proportionately less as it approaches the horizontal. As the plane of inclination is high, the variation in distance is never very great, being

only sufficient to correct the appearance in front. The angle of inclination of this frame in candelabra of ordinary size is designed to be about sixty degrees from the horizontal.

The base is arranged under the middle portion of the frame and is preferably made detachable, and provided with catches *h*, to engage seats *k*, of the frame. In this way, the frames can be easily stored away, and frames of any outline figure can be attached to the base when desired.

Having thus described my invention, what I claim, and desire to secure by Letters Patent is:—

1. In a candelabrum, series of candles of equal length, having their flame producing tips arranged in the form of a symbol, in a plane of high inclination approximating the vertical plane, and separated by intervals actually increasing with their variation from the horizontal and apparently equalized with reference to said vertical plane, in combination with corresponding series of candle holders connected to an inclined frame.

2. A candelabrum having angularly disposed series of candle holders arranged in the same inclined plane at the defining points of the contour of a symbol, said candle holders being separated by lineal distances, actually increasing with their angular variation from the horizontal, and apparently equal to each other in projection on the vertical plane.

3. A candelabrum having frame bars intersecting each other in the form of a symbol in an inclined plane of about sixty degrees from the horizontal, and, connected to said frame bars, series of candle holders provided with sockets at equal distances above said frame bars and arranged at proportionate intervals to indicate said symbol normally in the vertical plane.

4. A candelabrum having horizontal and other series of light holders, arranged in the same inclined plane, in the form of a symbol, the distance between any two adjacent light holders in a horizontal series representing the long side of a right angle triangle of which the distance between any two adjacent light holders in a series at right angles to such horizontal line is the hypotenuse, and the distance between any two adjacent light holders in a series at any other angle to the horizontal is proportionately less as it approaches the horizontal.

5. A candelabrum having candle holders arranged in series in a single plane of high inclination from front to rear along lines and at angles marking the form of a symbol and having the lines of separation between adjacent holders greater in proportion to the variation of such lines from the horizontal, whereby such lines are rendered substantially equal to each other in reference to the front vertical plane of projection.

6. The combination with a pedestal having a flat top and a socket in the top thereof, of a candelabrum frame having intersecting lines of candle holders arranged in the same inclined plane, said frame having a supporting depending projection engaging the socket in the pedestal, and a horizontal bracing arm resting on the top of the pedestal.

7. A candelabrum having intersecting frame bars in a plane of about sixty degrees inclined to the horizontal, and series of candle holders connected to said frame bars, the tips of said candle holders being in an inclined plane parallel to the plane of said frame bars, said candle holders being arranged in the contour of a symbolic figure, and supporting means having a vertical arm and a horizontal arm, and a depending projection adapted to fit in the socket of a pedestal.

In testimony whereof I affix my signature, in presence of two witnesses.

MARY V. ANDERSON.

Witnesses:
HERBERT C. EMERY,
GEORGE M. ANDERSON.