Feb. 4, 1936. F. W. SCHARF 2,029,590

ROTARY MOTOR OR PUMP

Original Filed July 3, 1930

Fig. 1.

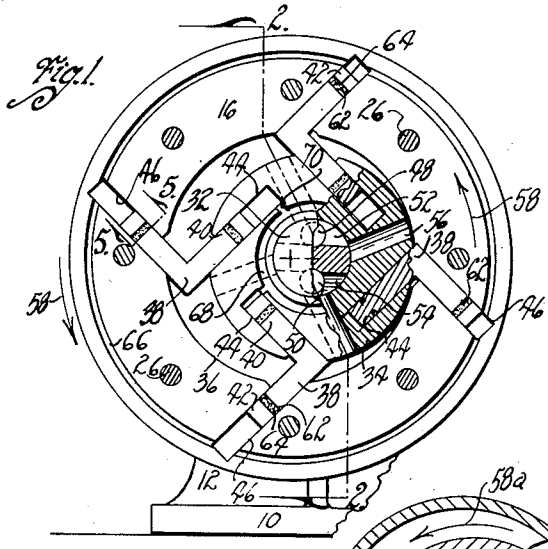

Fig. 3.

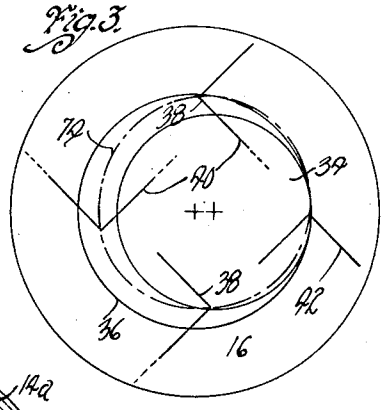

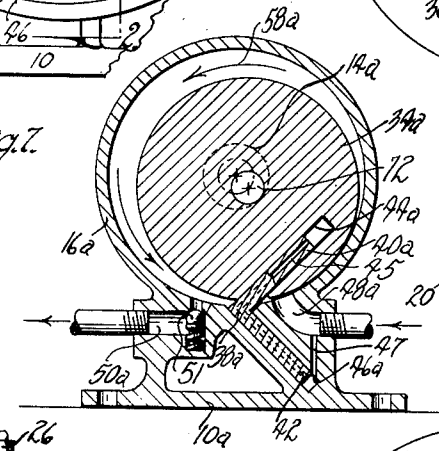

Fig. 7.

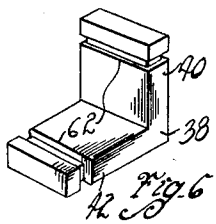

Fig. 6.

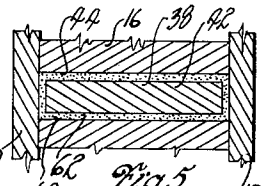

Fig. 5.

Fig. 2.

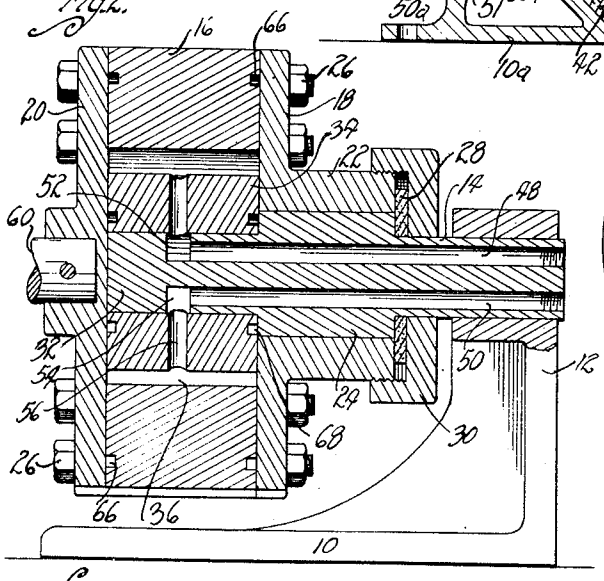

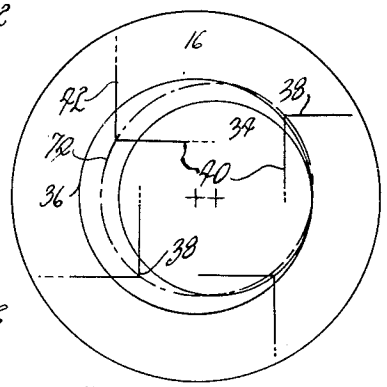

Fig. 4.

Witness
Elw. Seeley

Inventor
Frank W. Scharf
By Bair, Freeman & Sinclair
Attorneys

Patented Feb. 4, 1936 2,029,590

UNITED STATES PATENT OFFICE

2,029,590

ROTARY MOTOR OR PUMP

Frank W. Scharf, Sioux City, Iowa, assignor to McGraw Electric Company, Chicago, Ill., a corporation of Delaware

Application July 3, 1930, Serial No. 465,577
Renewed September 8, 1933

9 Claims. (Cl. 103—121)

The object of my invention is to provide a rotary motor or pump which is simple, durable, and comparatively easy to manufacture.

A further object of my invention is to provide a device which may be used for either a pump or a motor and having expansible and contractible chambers for pumping fluid or for receiving fluid under pressure so that the device will act as a motor with a novel means of sealing the chambers from each other.

More particularly it is my object to provide a motor or pump having a casing with a cavity therein, a member being mounted for movement within the cavity and sealing partitions being provided in the form of blades with their ends slidably mounted in the casing and the member.

A further object is to provide the ends at an angle relative to each other whereby an eccentric motion of the member relative to the casing may be had without any binding of the blades in the slots with respect to which they slide.

Still a further object is to provide a form of construction in which a single blade is used and the eccentrically movable member sealingly contacts with the interior wall of the casing, whereby expansible and contractible chambers are provided between such contact point and the blade or partition member.

Still a further object is to provide a means for permitting the flow of fluid to and from the expansible and contractible chambers.

With these and other objects in view, my invention consists in the construction, arrangement and combination of the various parts of my device, whereby the objects contemplated are attained, as hereinafter more fully set forth, pointed out in my claims, and illustrated in the accompanying drawing, in which:

Figure 1 is an end elevation of the motor or pump, showing one of the end plates removed.

Figure 2 is a sectional view on the line 2—2 of Figure 1.

Figures 3 and 4 are diagrammatic views, showing different positions of the sealing partitions or blades.

Figure 5 is an enlarged sectional view on the line 5—5 of Figure 1.

Figure 6 is a perspective view of one of the sealing partitions or plates; and

Figure 7 is a sectional view through a single blade pump.

On the accompanying drawing I have used the reference numeral 10 to indicate a base. An upright bracket 12 is formed on the base and rigidly supports a stationary shaft 14.

A casing 16 is rotatably mounted with respect to the shaft 14 and is provided with end plates 18 and 20. The end plate 18 has a hub 22 journaled on an enlarged portion 24 of the shaft 14. Suitable bolts 26 are provided for holding the casing 16 and the end plates 18 and 20 assembled together. Suitable gaskets may be provided between the casing 16 and the end plates 18 and 20 if found desirable.

The end plate 20 contacting with the outer end of the shaft 14 prevents end movement of the casing 16 in one direction relative to the shaft 14. A washer 28, preferably of fibre or the like, prevents end movement of the casing 16 in an opposite direction. A nut member 30 is screw threaded on the hub 22 to hold the washer 28 relative thereto.

Rotatably mounted on an eccentric portion 32 of the shaft 14 is a rotor member 34. The diameter of the member 34 is somewhat less than the interior diameter of an annular cavity 36 formed in the casing 16.

For separating the cavity 36 into a plurality of expansible and contractible chambers, I provide partition members 36 having inner ends 40 and outer ends 42. The inner ends 40 are slidably mounted in slots 44 formed in the rotor member 34, while the outer ends 42 of the blades 38 are slidably mounted in slots 46 formed in the casing 16.

The arms 40 are arranged at an angle relative to each other, preferably a right angle. By this construction simultaneous rotation of both the casing 16 and the rotor member 34 will cause reciprocation of the arms 40 in the slots 44, and reciprocation of the ends 42 in the slots 46. Rocking of the casing 16 and rotor 34 relative to each other will be prevented by the sliding connections of the blades 38 with the casing and rotor member, inasmuch as the arms 40 and 42 cannot swing out of right angled positions relative to each other.

In using the device as a motor it is desirable to supply a fluid under pressure, such as compressed air, compressed gas, or a liquid such as lubricating oil, to the chambers when they expand and allow such fluid to be exhausted from the chambers when they contract. To accomplish this, I provide inlet and outlet ducts 48 and 50 in the shaft 14. An inlet port 52 is cut across the shaft 14 within the casing 16 in communication with the duct 48 and an outlet port 54 is provided in communication with the outlet duct 50. Passageways 56 are formed in the rotor member 34 from the shaft 14 to the exterior of

the rotor member and communicate with the chambers defined by the rotor **34**, casing **16**, and partition blades **38**.

By supplying a fluid under pressure through the inlet duct **48**, such fluid flows from the port **52** through the passageways **56**, which happen to be in communication with the port and will cause rotation of both the casing **16** and the rotor member **34** in the direction of the arrow **58**. As soon as any of the chambers are in communication with the port **54** by means of the passageways **56** registering with the outlet port, the fluid will be discharged through the outlet duct **50** from the chambers as they contract. By reversing the flow of fluid, that is, by using the duct **50** for an inlet and the duct **48** for an outlet, the casing **16** may be made to rotate in a direction opposite to the arrow **58**.

A drive shaft **60** may be secured to the end plate for imparting power from the device when used as a motor to machinery and the like. If desired, a belt can be run on the outside of the casing so as to transmit power from the motor to machinery and the like.

When the device is used as a pump, an electric motor or other source of power may be operatively connected with the casing **16** for imparting rotation thereto. When rotated in the direction of the arrow **58** fluid will be drawn into the chambers from the duct **48** while the chambers are expanding, and will be forced out through the duct **50** when the chambers are contracting. If the fluid is air, it can be compressed by the pump.

The provision of sealing partitions slidably mounted in both the casing and the rotor member makes is possible to easily seal the partitions **38** in their reciprocating motion as compared with blades which slide in the rotor only and merely contact with the interior surface of the casing. Packing grooves **62** may be provided adjacent the ends of the partition members **38** to receive felt packing or the like **64**. Other packing means, of course, may be provided between the rotor **34** and the end plates **18** and **20** if desirable. To prevent the compression of air in the slots **44** and **46** as the blades **38** reciprocate in the slots, and also to prevent any fluid that may leak past the blades from interfering with their free movement in the slots, I have provided an annular groove **66** in the casing **16** and an annular groove **68** in the rotor **34**. The grooves **66** and **68** provide intercommunication between the slots **46** and **44** respectively. Short branch grooves **70** are provided in the rotor **34** between the annular groove **68** and the slots **44**. If all of the air spaces in the slots at the ends of the blades were displaced with liquid the blades would still be free to move in the slots as the volume of the combined spaces is always equal.

Instead of rotating both the casing and rotor, these two members may be held against rotation and a shaft rotated having an off center spindle on which the rotor is rotatably mounted. A construction of this character is shown in Figure 7, wherein the casing is referred to by the reference numeral **16***a*, the rotor by the reference numeral **34***a*, the shaft being **14***a*, and the off center spindle being **72**. In this figure I have illustrated how one blade can be used when the device is used as a pump. In the device shown in the first four figures of the drawing, the rotor is just far enough off center with respect to the casing to allow a slight interchange of fluid across the part of the rotor which is closest to the interior surface of the casing. In the device shown in Figure 7, however, the rotor is far enough off center to contact with the interior of the casing throughout the eccentric movement of the rotor relative to the casing. This contacting point serves as a seal while the partition blade **38***a* serves as a second seal. An inlet duct **48***a* and an outlet duct **50***a* are provided in the base **18**, communicating with the space between the rotor on the casing on opposite sides of the partition blade **38***a*.

When the shaft is rotated the rotor **34***a* moves eccentrically around in the casing **16***a*, drawing fluid in through the duct **48***a* and discharging it from the duct **50***a*. The rotor is moved in the direction of the arrow **58***a* and will cause the chamber in communication with the duct **48***a* to expand for drawing fluid into the pump and will cause the chamber in communication with the duct **50***a* to contract for discharging fluid through the duct **50***a*. This process will be repeated each time the shaft **14***a* is rotated.

To prevent compression of air in the slot **44***a*, I provide a passageway **45** from end to end through the blade **38***a* so that the air can be interchanged between the slots **44***a* and **46***a* after the shaft **14***a* rotates. To further insure that the blade will work freely, a passageway **47** leading to the inlet duct **48***a* may be provided. This passageway will allow the escape of any fluid which might leak from the inside of the casing **16***a* past the blade **38***a* and into the slots **44***a* and **46***a*.

Referring to the diagrammatic Figures 3 and 4, the parts of the device shown in Figure 1 are diagrammatically illustrated, the center line **74** indicating the path of the right angled corner *a* of the partition blade **38***a*. It will be noted that the right hand partition blade in moving upward will move into and then out of the casing until it reaches the upper position shown in Figure 3. It will then shift to a position midway between the rotor surface and the interior wall of the casing until it reaches the left hand position shown in Figure 3, after which it will shift inwardly until in its lower position it will begin to move into the rotor and will move into and then out of the rotor during the next quarter of a revolution. The blade will have a similar movement in the device shown in Figure 7 except that the blade, the casing, and the rotor will not rotate.

Since the blade is of solid construction, it will not bend and will, therefore, prevent any relative rotation of the rotor and the casing. Although the partition blade may be made with an obtuse or an acute angle and will still work, the right angled shape is preferable as it causes less binding of parts and has less movement of the blade with respect to the slots in which it is mounted.

Some changes may be made in the construction and arrangement of the parts of my device without departing from the real spirit and purpose of my invention, and it is my intention to cover by my claims, any modified forms of structure or use of mechanical equivalents, which may be reasonably included within their scope.

I claim as my invention:—

1. In a machine of the class described, a hollow casing having a circular bore, a circular member mounted to have a circular movement within the bore but without rotation about its axis, said member being at all times substantially in engagement with a portion of the bore, a slot in the member and in the casing, said slots opening into said bore and extending depthwise substantially at right angles to each other, an L-

shaped blade, the legs thereof being disposed for rectilinear sliding movement depthwise in said slots, means for giving the member a circular movement within the bore, and inlet and outlet passages communicating with the space on the two sides of the blade.

2. In a device of the character described, a chambered member, a member within the chambered member, said members being mounted in relatively displaceable relation, a sealing device movable across a space between the two members, the device having paired, non-parallel sealing portions rigidly connected with each other, each of said members having a recess, the mouths thereof opening into the space between the members, each of said sealing portions being seated in one of said recesses and being constrained for rectilinear movement therein, responsive to the relative displacement of said members, in directions toward and from the mouth of its associated recess.

3. In a device of the character described, a housing member, a displacement member therein, the members being mounted in relatively displaceable relation and provided with variably spaced walls, the spaced walls each being provided with a recess, the recesses extending angularly relatively to each other and the mouths of said recesses opening into the space between said walls, a blade element having angularly extending parts rigidly connected with each other and terminating at their outer ends in portions which constitute plungers, each of said plungers being operable in one of the wall recesses, and coacting therewith to limit the flow of fluid around said blade element, the recesses being formed to constrain the plungers to a rectilinear reciprocating movement toward and from the mouths of their respective recesses.

4. In combination in a device of the class described embodying a pair of rotatable, relatively movable displacement members, one disposed within the other, and providing a space therebetween, each of said members having a recess opening into said space, said recesses extending angularly relatively to each other, a partition member for said space, including a pair of angularly related plunger-like elements rigidly connected to each other, each operable in one of said recesses in directions toward and from the opening thereof, the members being operatively interconnected through said partition member for joint rotation, and being held against angular rocking movement, one relative to the other, by said partition member.

5. In a machine of the class described, a hollow casing member, an inner member adapted to operate in said casing, companion channel-shaped recesses in said members, arranged, depthwise, at a distinct angle to each other, a blade having its ends out of parallel and slidable in the channels, in directions depthwise of said channels, and dividing the space between the members into a plurality of chambers, and inlet and outlet passages communicating with said chambers in a predetermined order.

6. In a machine of the class described, a casing provided with a bore, an inner member adapted to operate in said bore, slots in said casing and in said member, opening into said bore, said slots being arranged in pairs and extending from their mouths, depthwise, at right angles to each other, a right angled blade slidable, depthwise, in each pair of slots, said blade dividing the space between the casing and member into a plurality of chambers, and inlet and outlet passages communicating with said chambers in a predetermined order, each of said blades being free to slide independently of the others.

7. In a machine of the class described, a hollow casing provided with a bore, an inner member adapted to operate in said casing, slots in said casing and in said member, opening into said bore, said slots being arranged in pairs and extending from their mouths, depthwise, at right angles to each other and substantially at 45° to radial lines drawn through the mouths of said slots, a right angled blade slidable, depthwise, in each pair of slots, said blade dividing the space between the casing and member into a plurality of chambers, and inlet and outlet passages communicating with said chambers in a predetermined order.

8. In a machine of the class described, a hollow casing provided with a bore, an inner member adapted to operate in said casing, pockets in said casing and in said member opening into said bore, said pockets being arranged in pairs, a partition member associated with each of said pairs of pockets, dividing the space between the casing and member into a plurality of chambers the partition members having portions thereof slidable, plunger-like in the pockets, inlet and outlet passages communicating with said chambers in a predetermined order, a relief duct for leakage fluid connecting the pockets in the casing, and a relief duct for leakage fluid connecting the pockets in said member.

9. In a machine of the class described, a hollow casing having a circular bore, a circular member mounted to have a circular movement within the bore but without rotation about its axis, said member being at all times substantially in engagement with a portion of the bore, a slot in the member and in the casing, said slots opening into said bore and extending depthwise substantially at right angles to each other, an L-shaped blade, the legs thereof being disposed for rectilinear sliding movement depthwise in said slots, said blade having a duct therethrough connecting spaces at the bottoms of said slots whereby said spaces may be relieved of leakage fluid, means for giving the member a circular movement within the bore, and inlet and outlet passages communicating with the space on the two sides of the blade.

FRANK W. SCHARF.