US 20060095035A1

(19) United States

(12) Patent Application Publication (10) Pub. No.: US 2006/0095035 A1

Jones et al. (43) Pub. Date: May 4, 2006

(54) INSTRUMENTS AND METHODS FOR REDUCTION OF VERTEBRAL BODIES

(76) Inventors: **Robert J. Jones**, Austin, TX (US); **Charles R. Forton**, Leander, TX (US)

Correspondence Address:
ROBERT DEBERARDINE
ABBOTT LABORATORIES
100 ABBOTT PARK ROAD
DEPT. 377/AP6A
ABBOTT PARK, IL 60064-6008 (US)

(21) Appl. No.: **10/980,675**

(22) Filed: **Nov. 3, 2004**

Publication Classification

(51) **Int. Cl.**
A61B 17/60 (2006.01)

(52) **U.S. Cl.** **606/57**

(57) **ABSTRACT**

A spinal stabilization system may be formed in a patient. In some embodiments, a minimally invasive procedure may be used to form a spinal stabilization system in a patient. Bone fastener assemblies may be coupled to vertebrae. Each bone fastener assembly may include a bone fastener and a collar. The collar may be rotated and/or angulated relative to the bone fastener. Extenders may be coupled to the collar to allow for formation of the spinal stabilization system through a small skin incision. The extenders may allow for alignment of the collars to facilitate insertion of an elongated member in the collars. An elongated member may be positioned in the collars and a closure member may be used to secure the elongated member to the collars. A reducer may be used to achieve reduction of one or more vertebral bodies coupled to a spinal stabilization system.

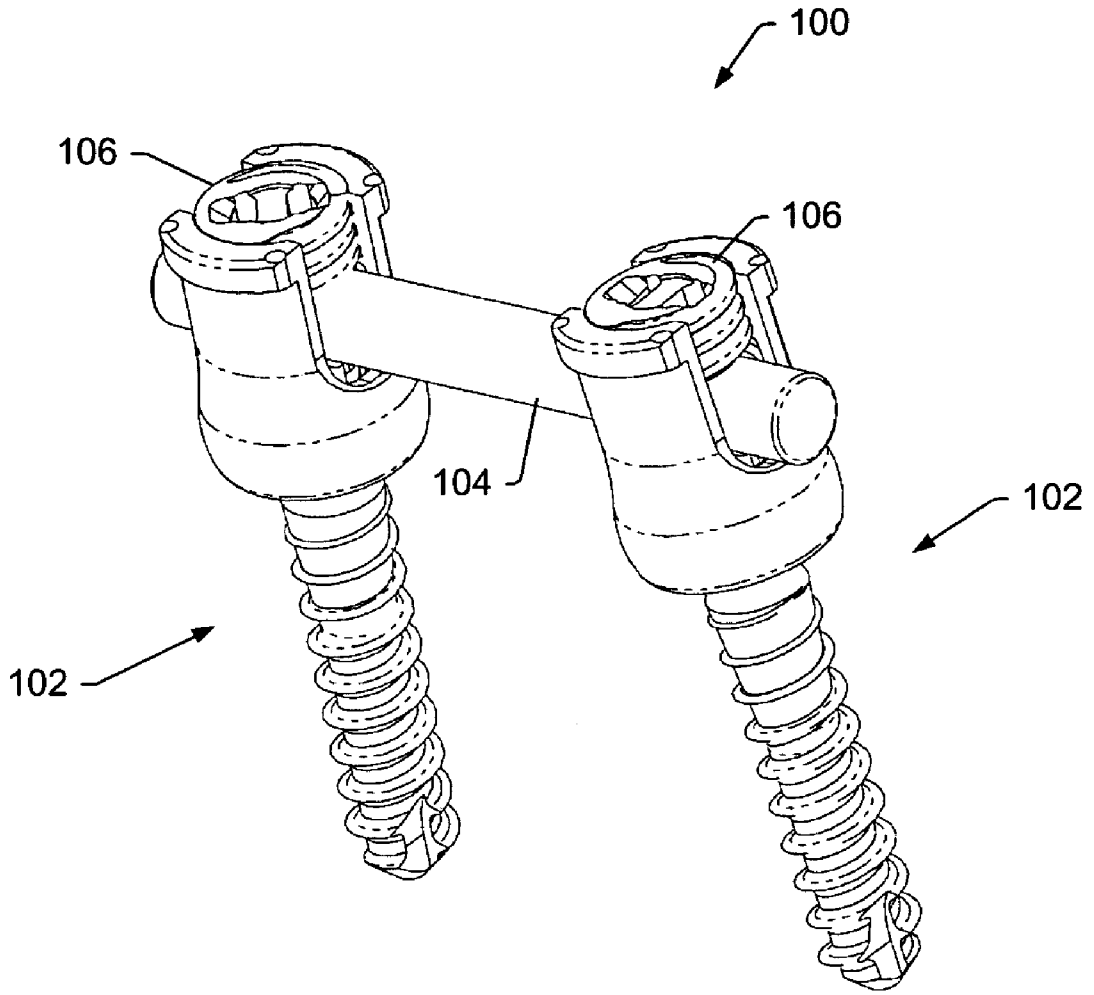

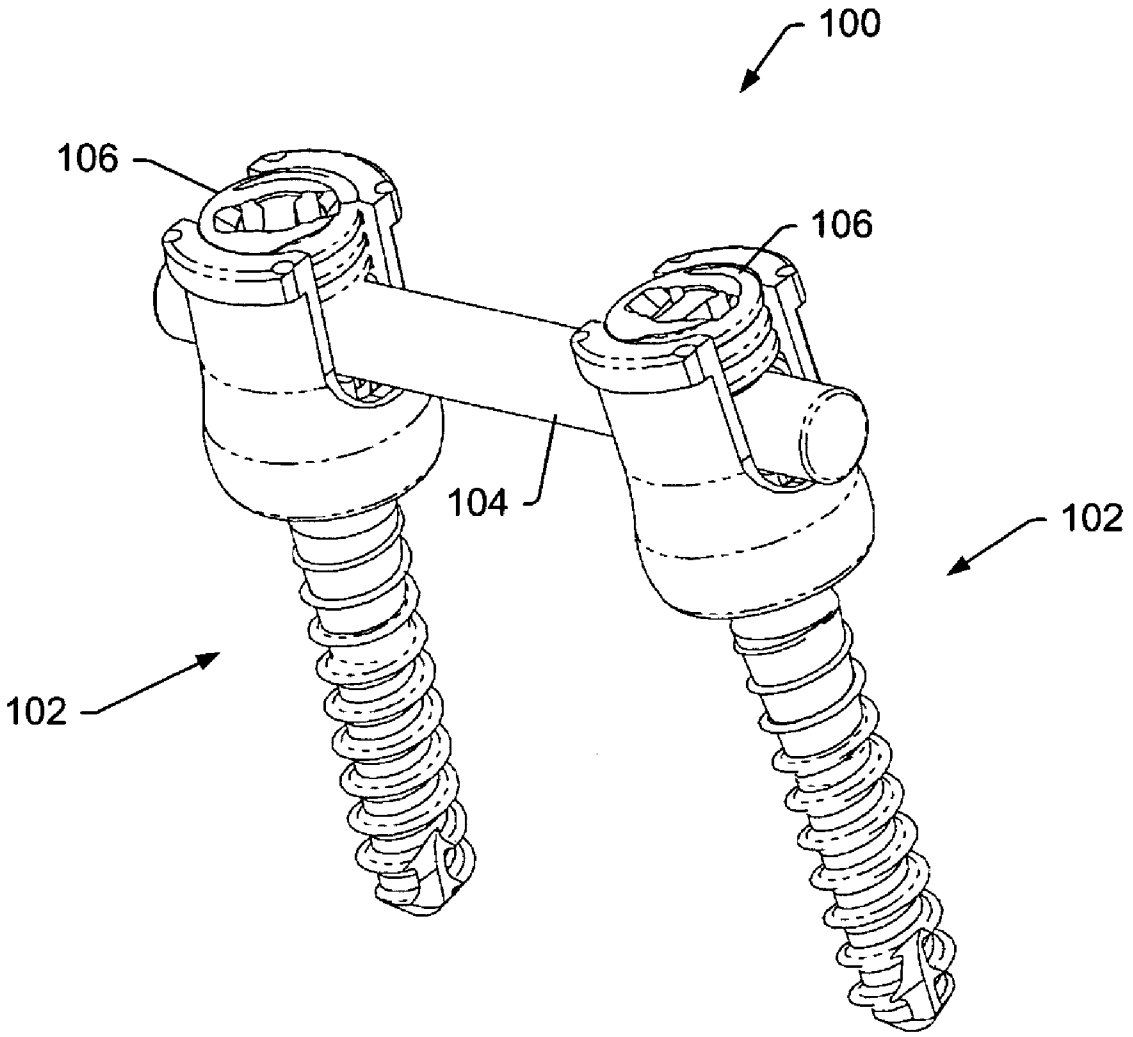

FIG. 1

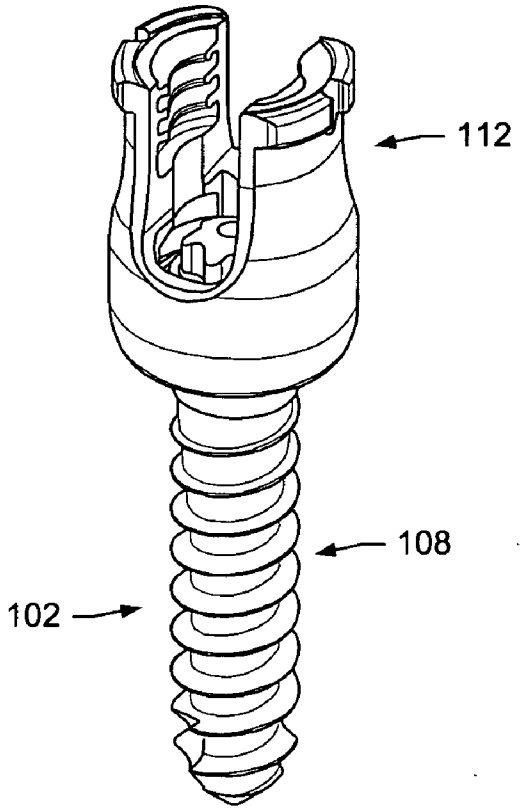

FIG. 2

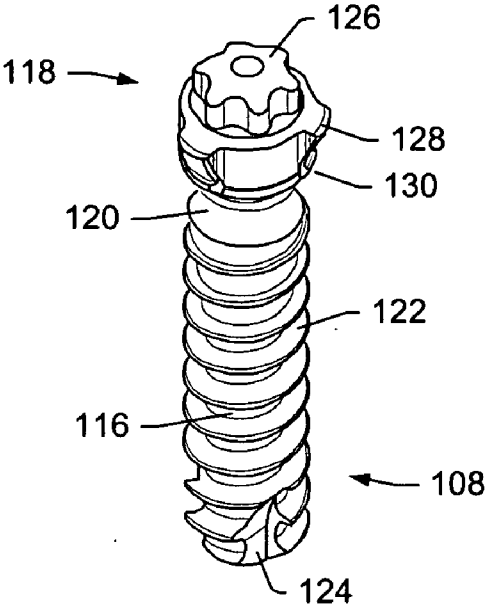

FIG. 3

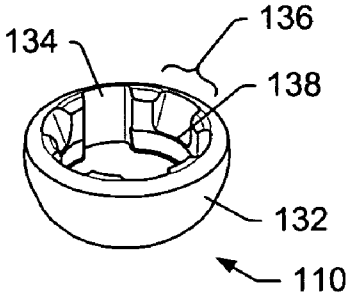

FIG. 4

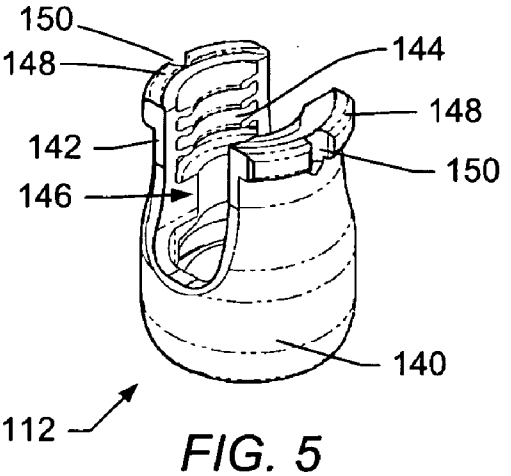

FIG. 5

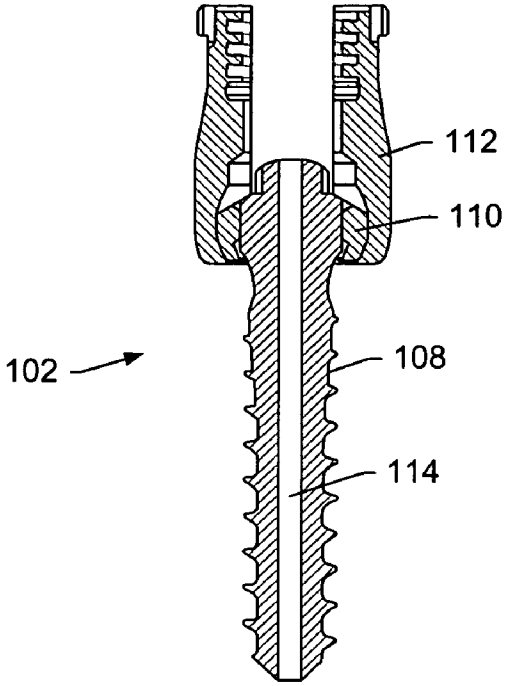

FIG. 6

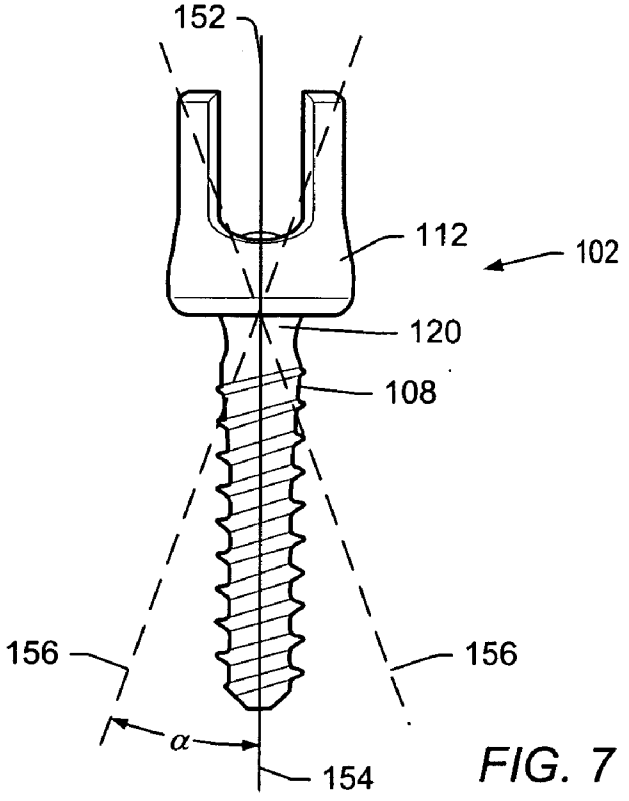

FIG. 7

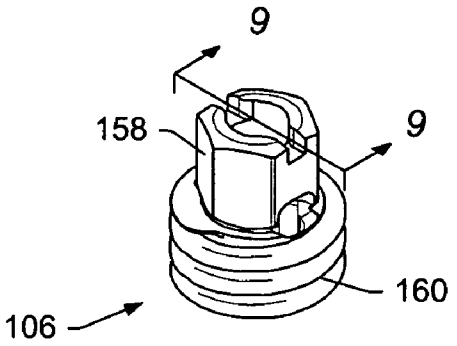

FIG. 8

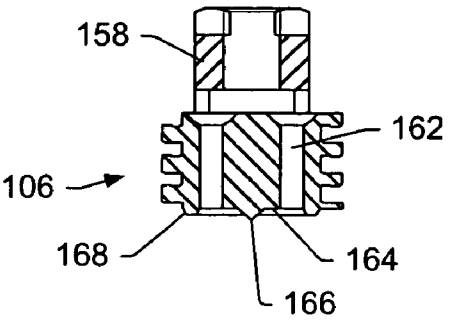

FIG. 9

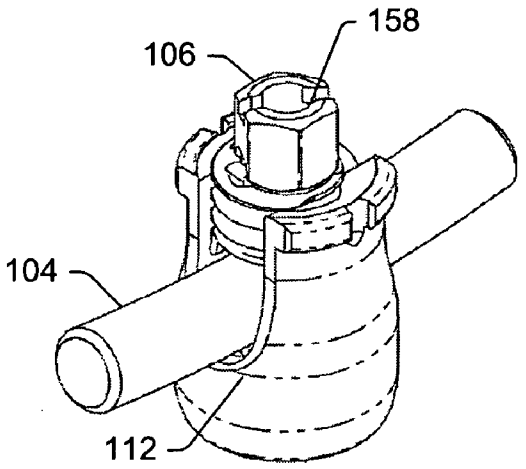

FIG. 10

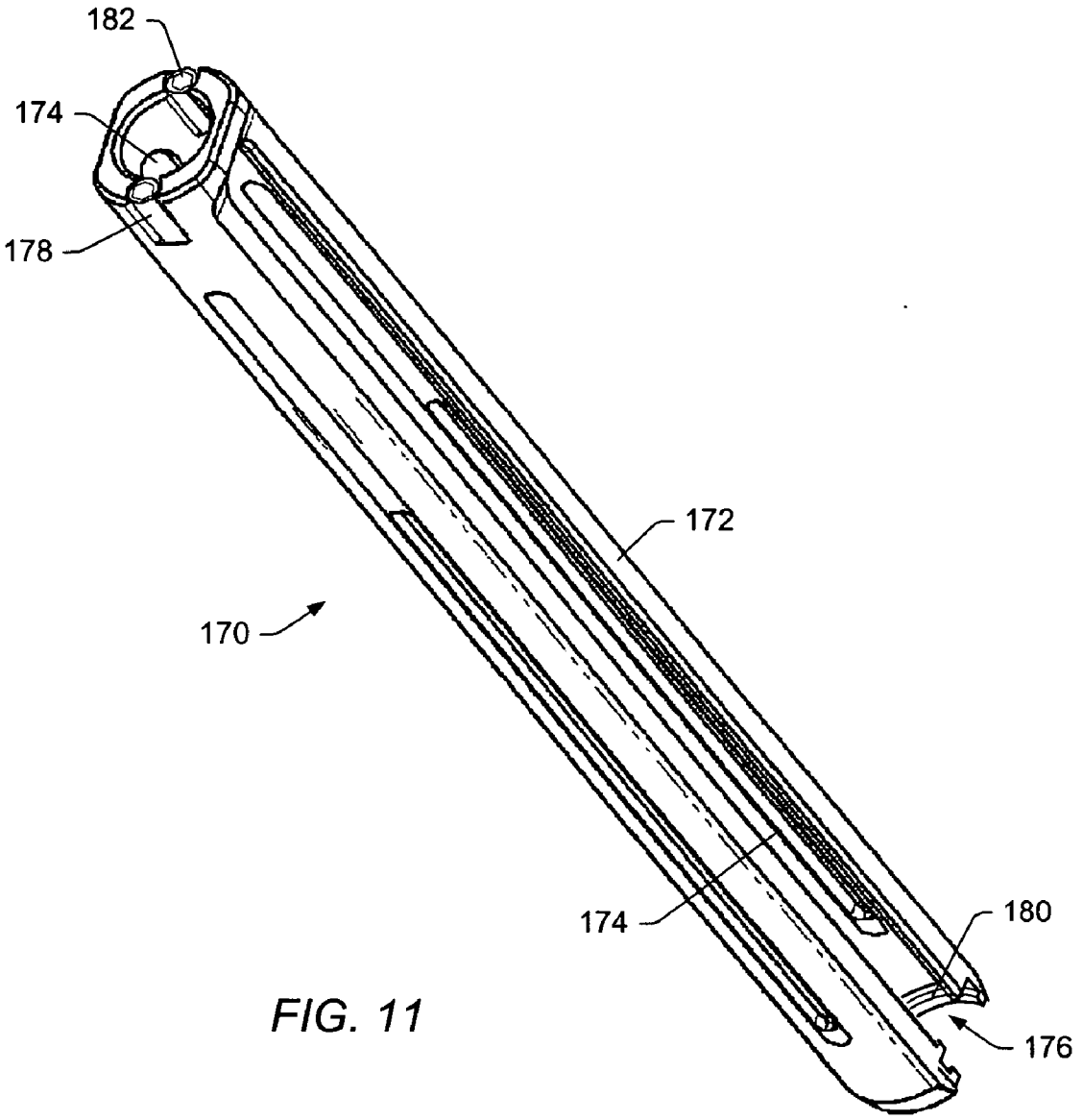

FIG. 11

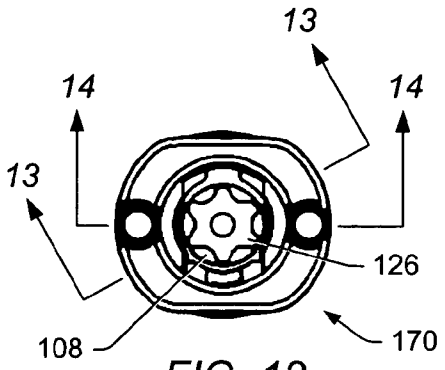

FIG. 12

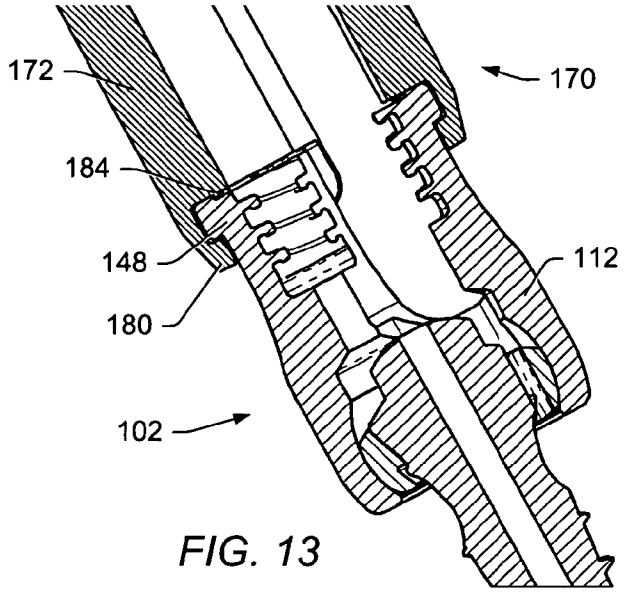

FIG. 13

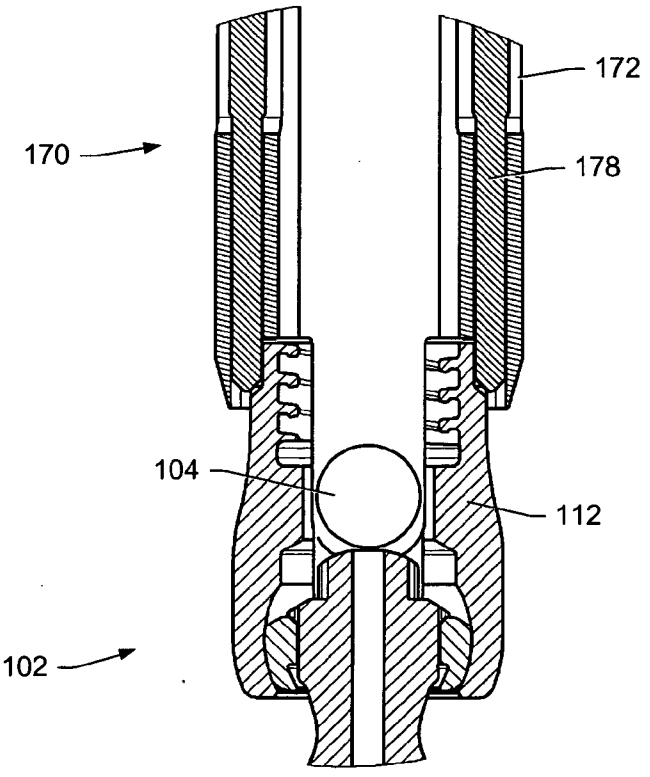

FIG. 14

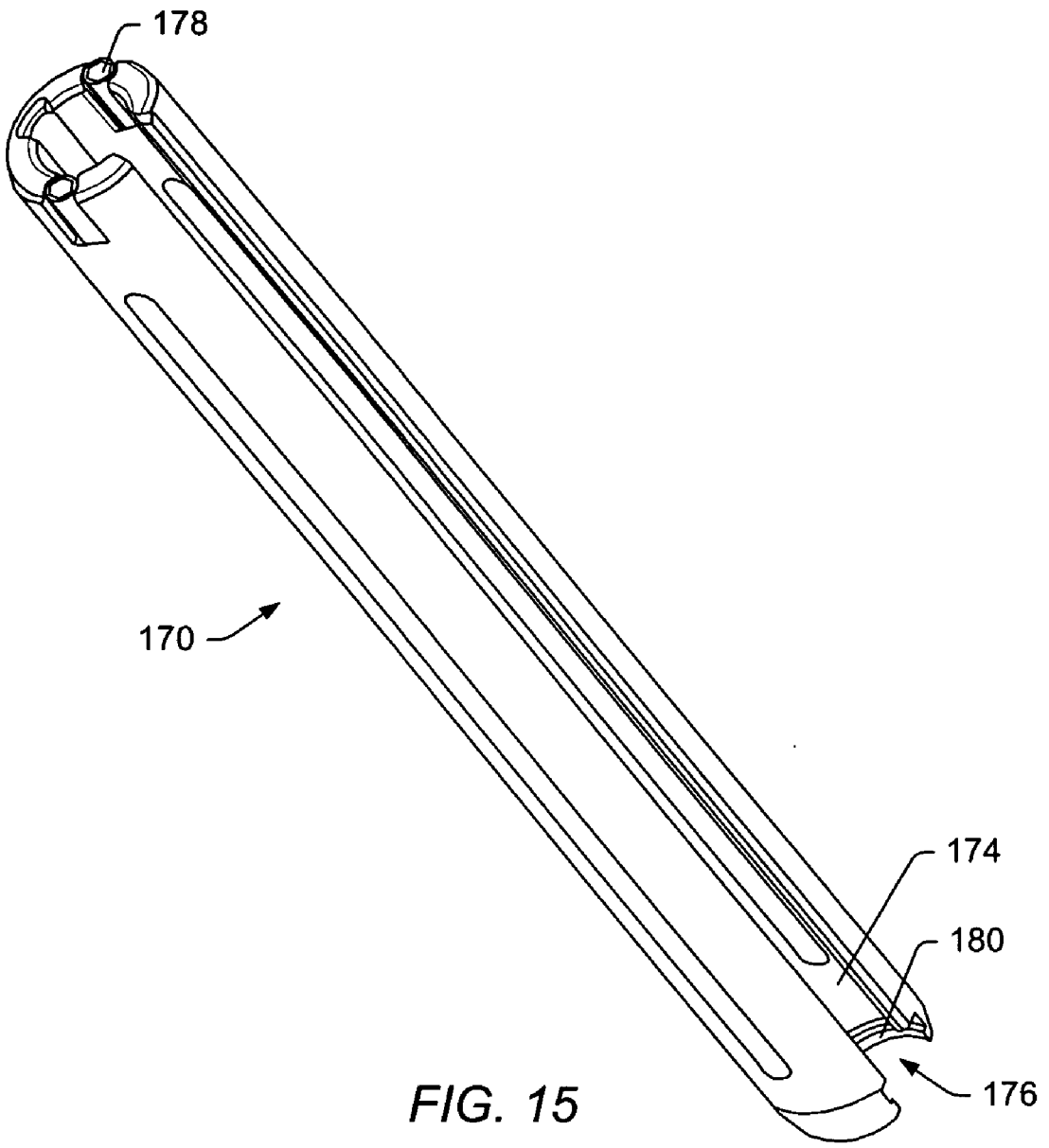

FIG. 15

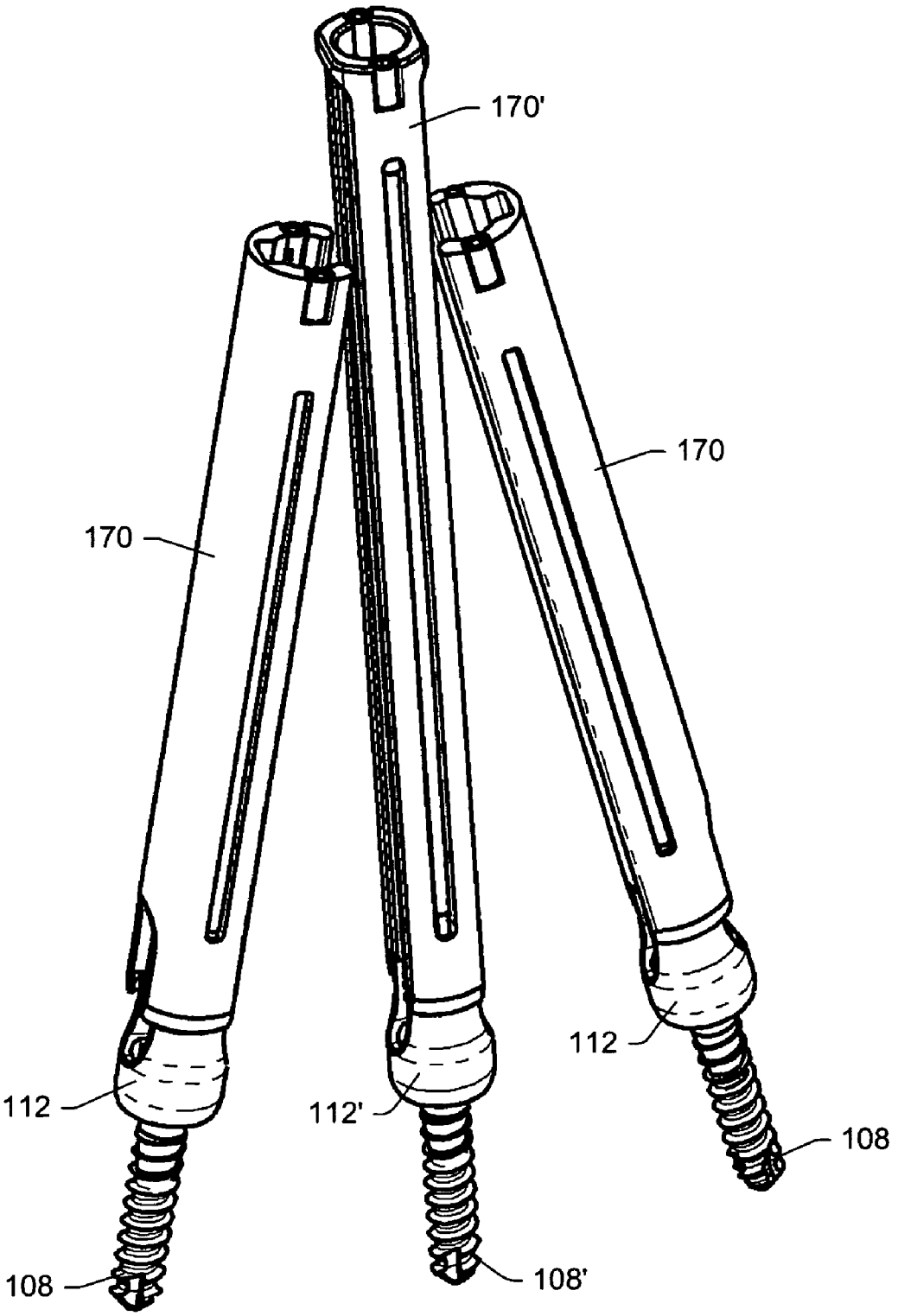

FIG. 16

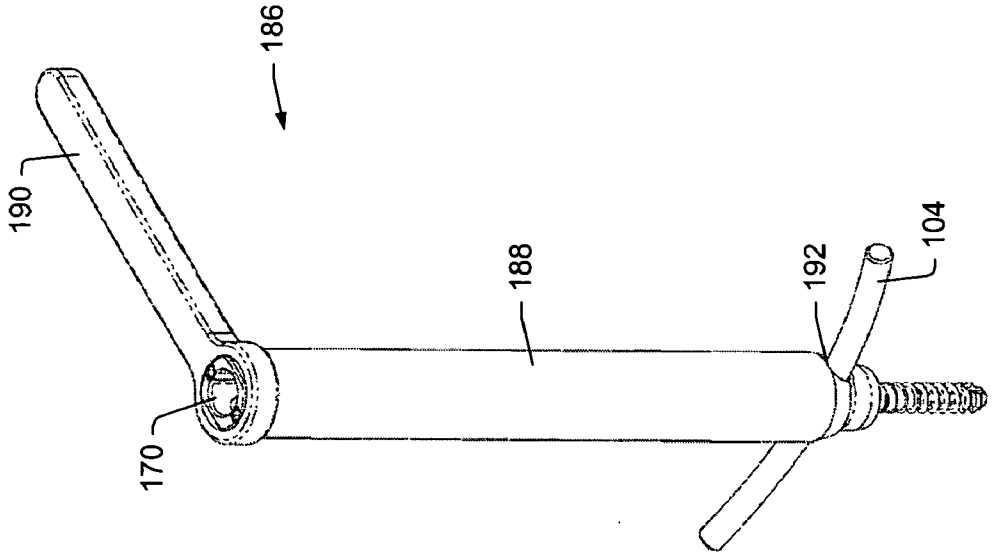

FIG. 18

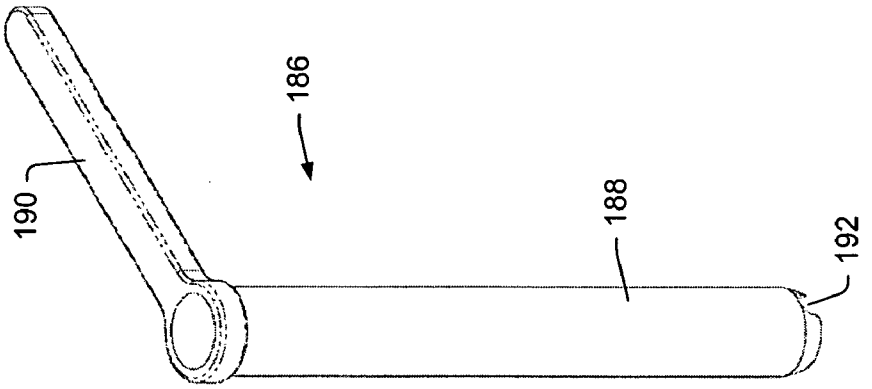

FIG. 17

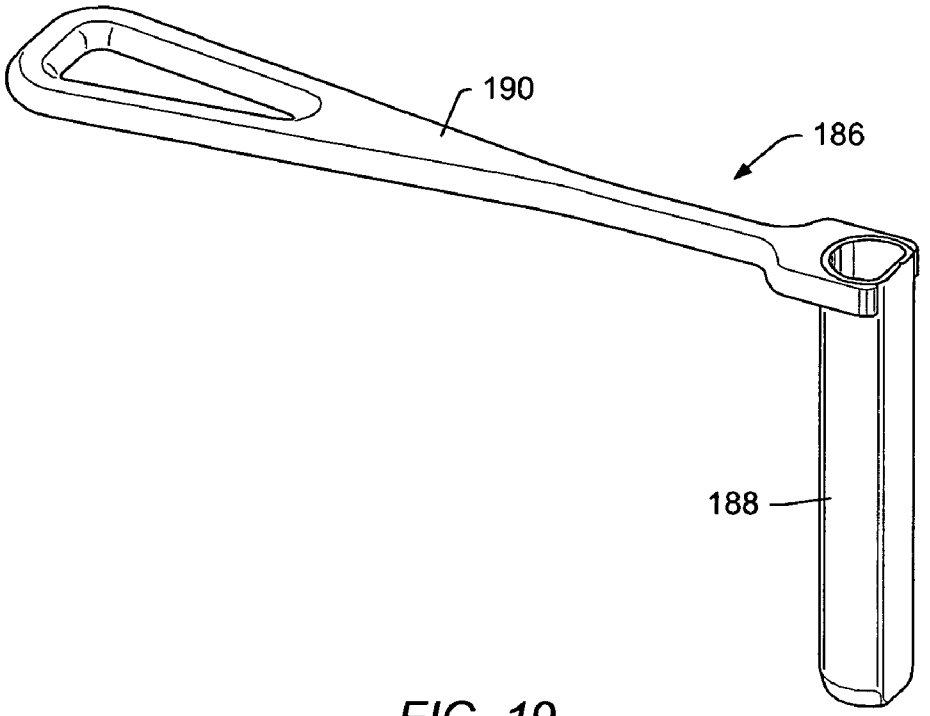

FIG. 19

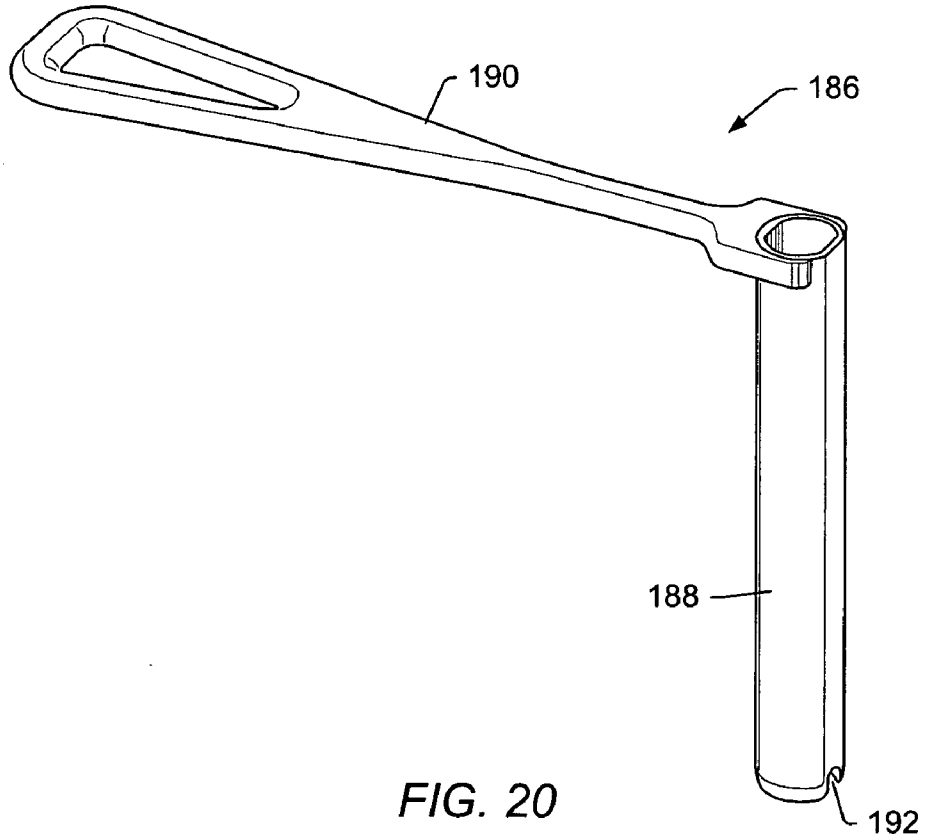

FIG. 20



FIG. 21



FIG. 22

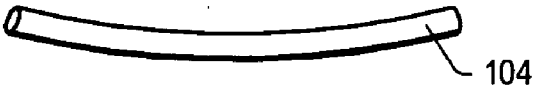

FIG. 23



FIG. 24

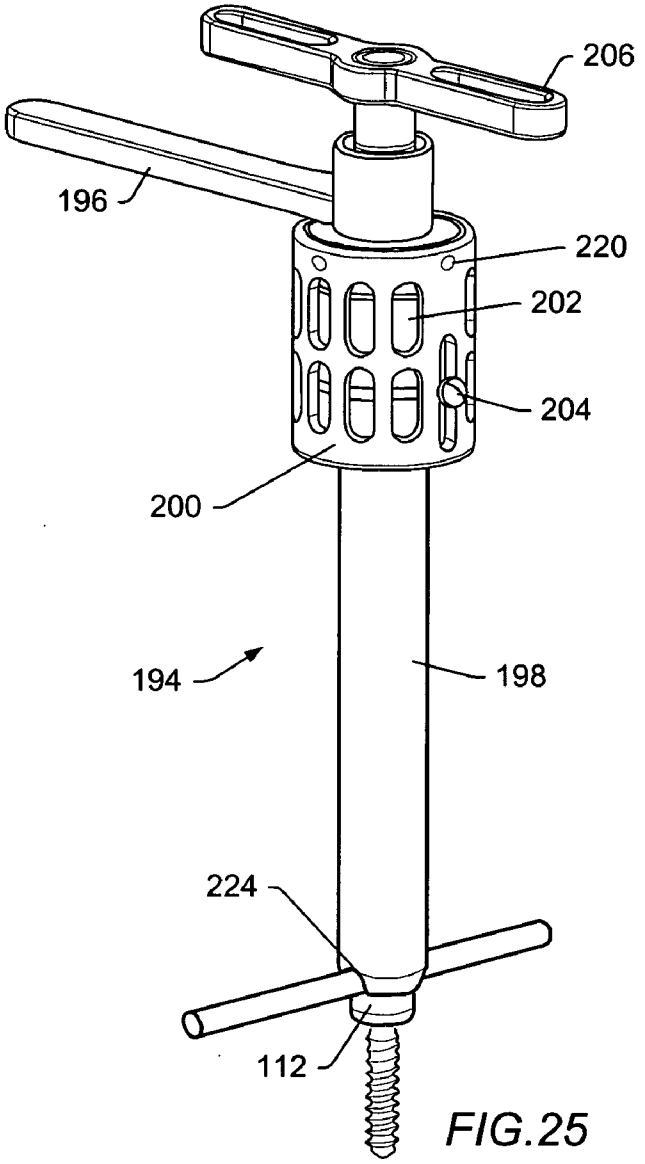
206
196
220
202
204
200
194
198
224
112

FIG.25

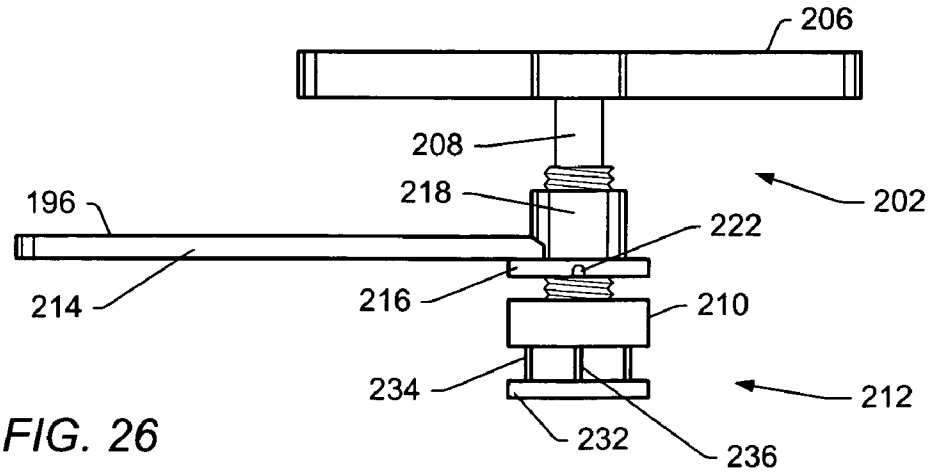
206
208
218
202
196
222
214
216
210
234
212
232
236

FIG. 26

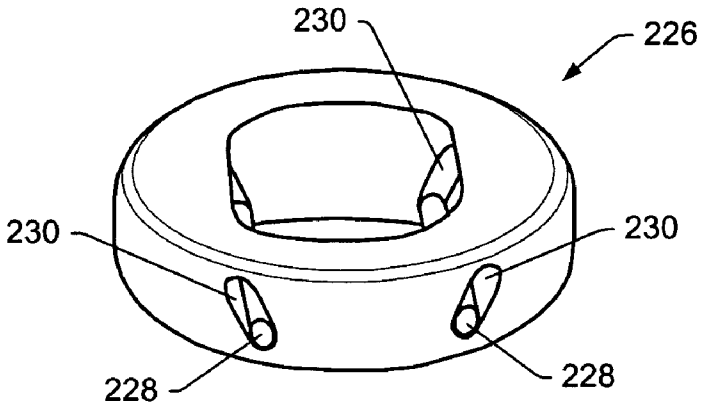

FIG. 27

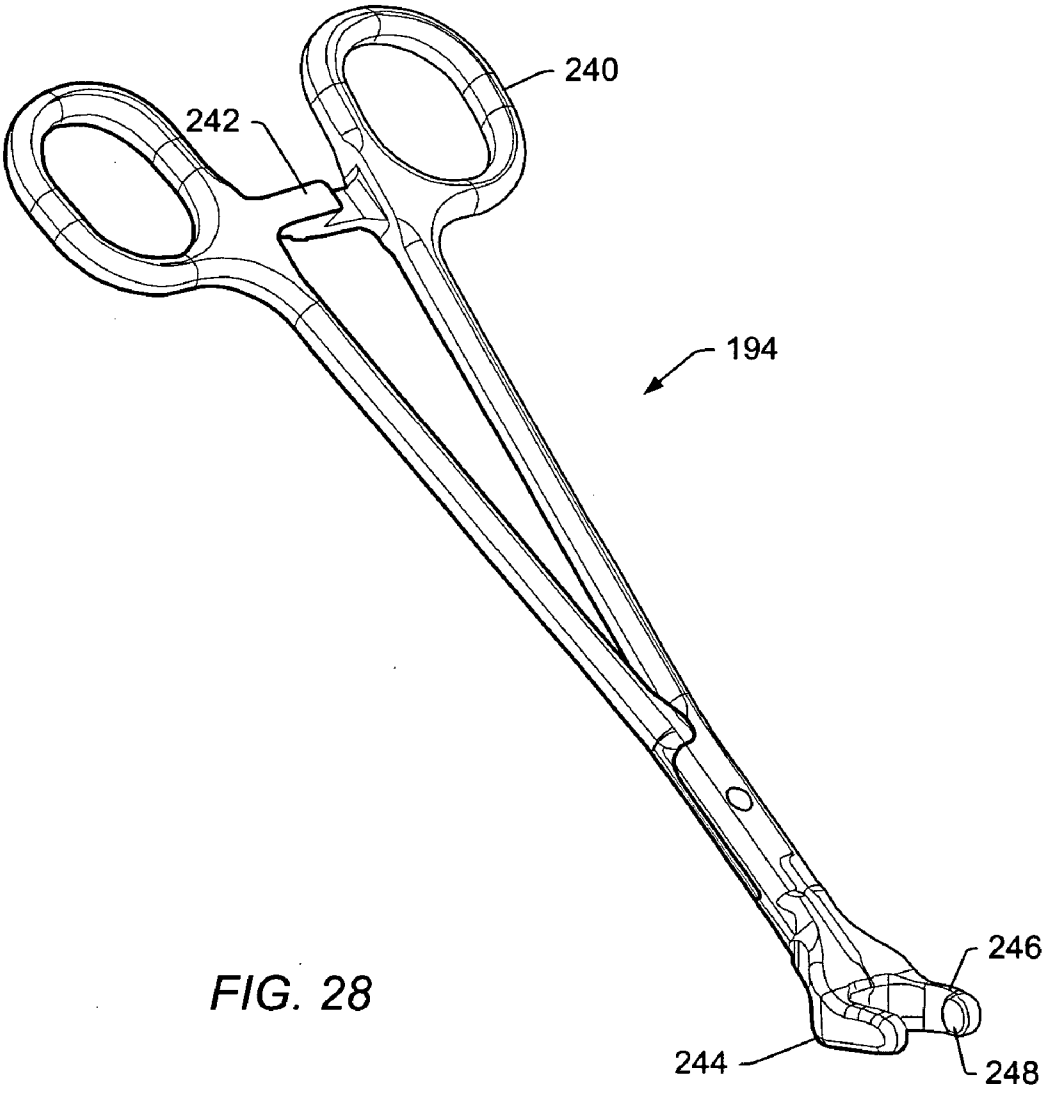

FIG. 28

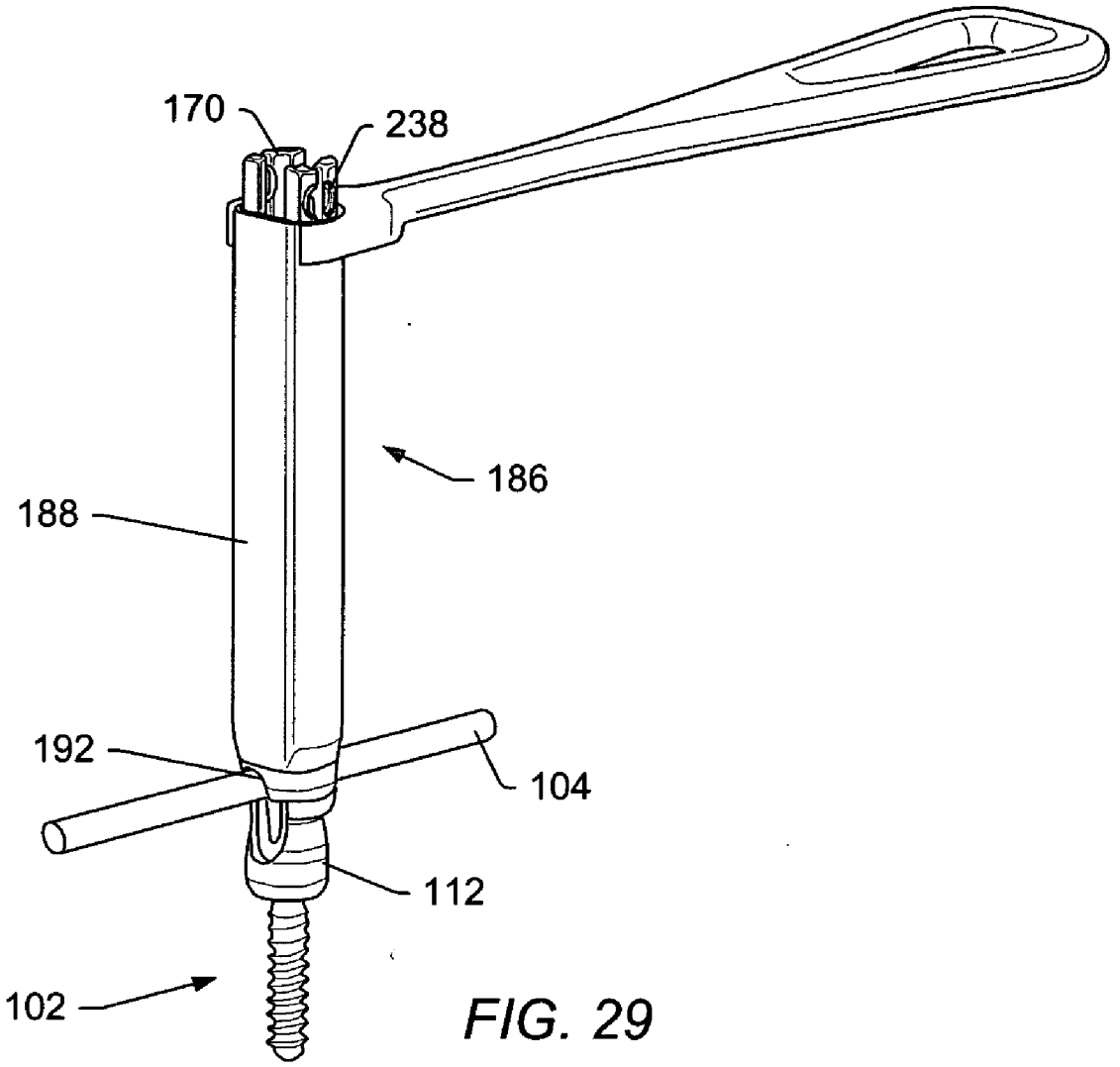

FIG. 29

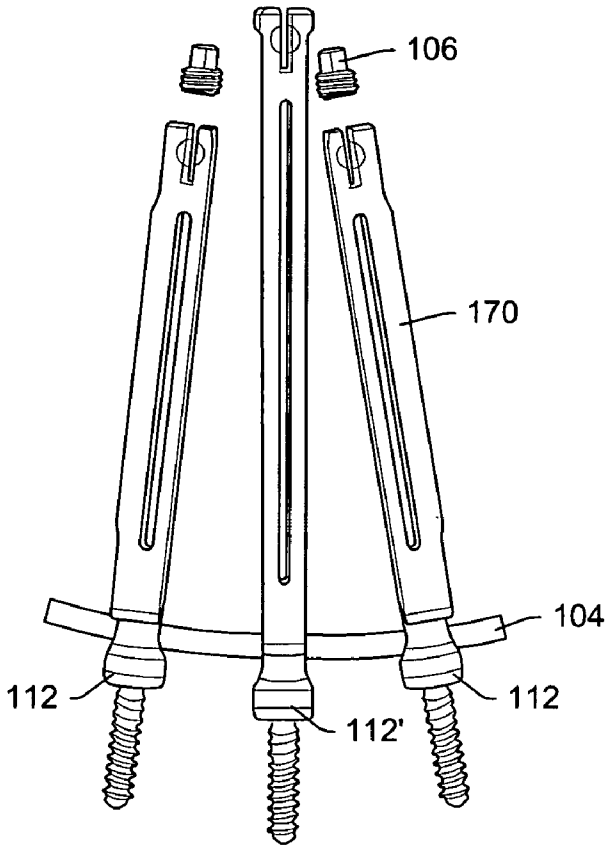

FIG. 30

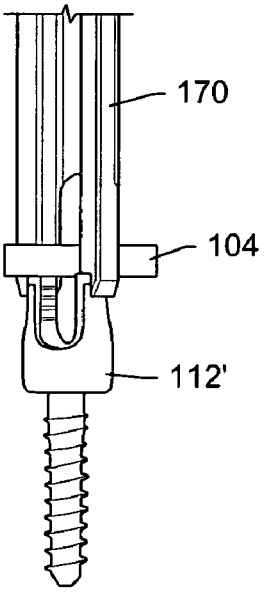

FIG. 31

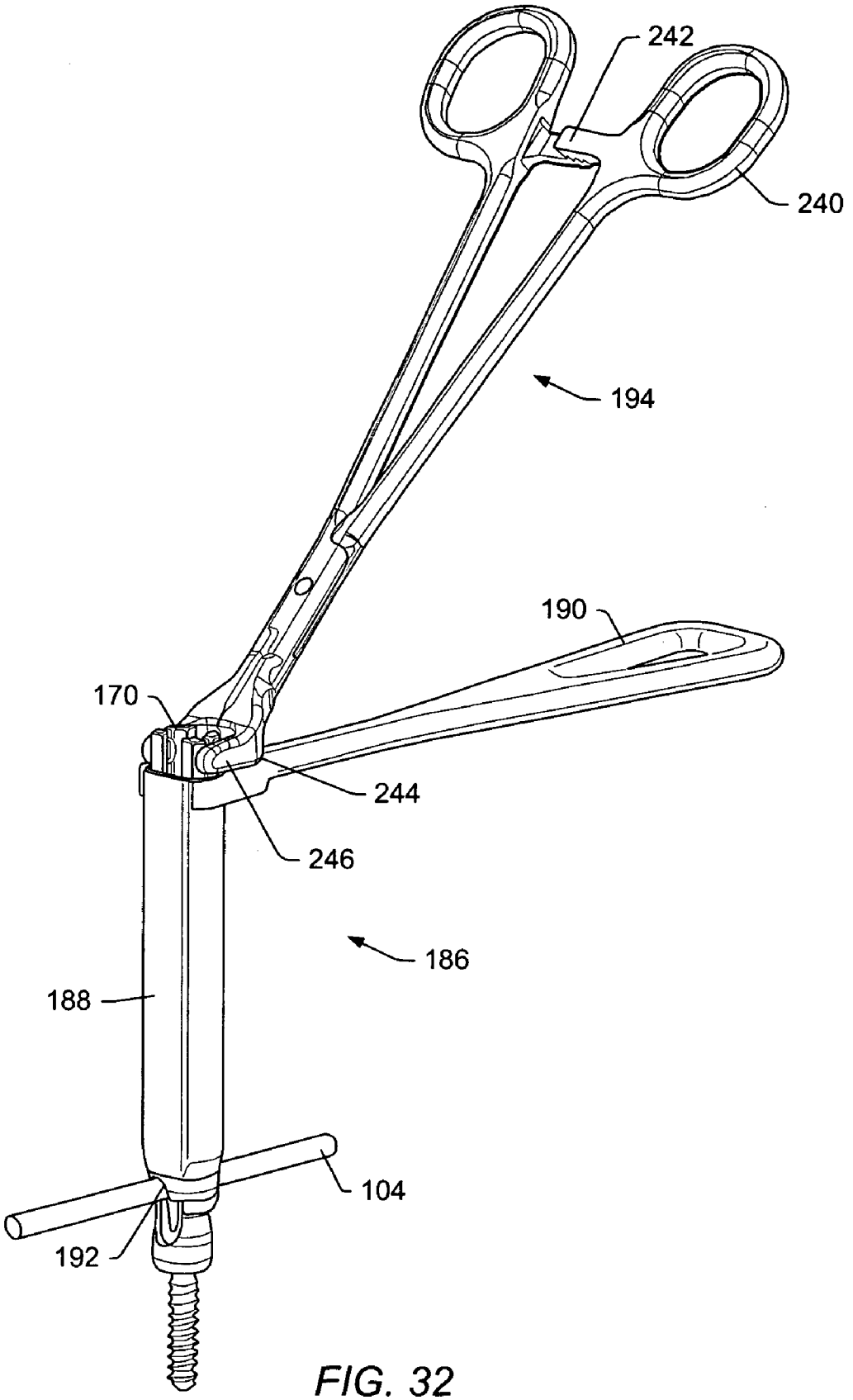

FIG. 32

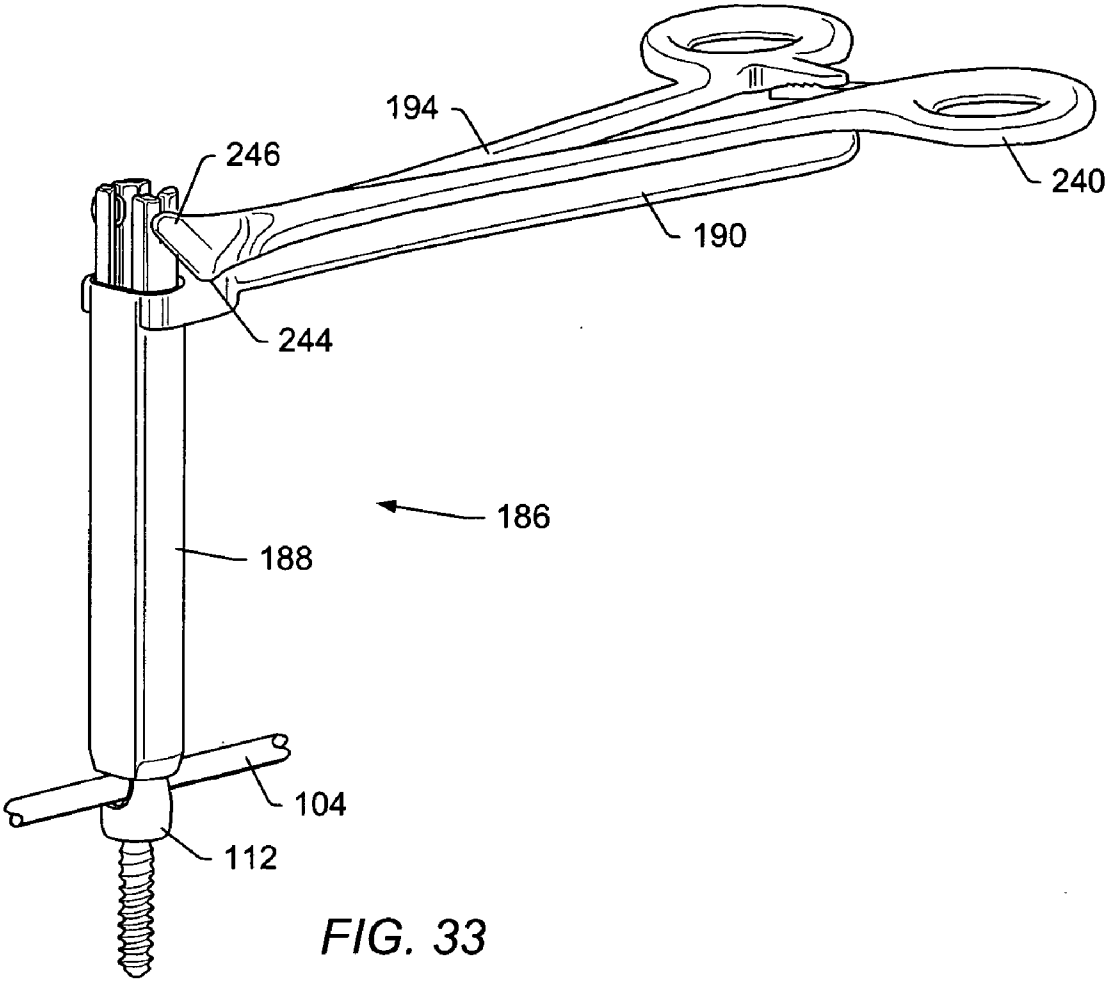

FIG. 33

INSTRUMENTS AND METHODS FOR REDUCTION OF VERTEBRAL BODIES

BACKGROUND

[0001] 1. Field of the Invention

[0002] The present invention generally relates to instruments and methods used during a spinal stabilization procedure to join vertebrae together. More particularly, the present invention generally relates to spinal surgical procedure that may use instruments and methods for reducing adjacent vertebrae.

[0003] 2. Description of Related Art

[0004] Bone may be subject to degeneration caused by trauma, disease, and/or aging. Degeneration may destabilize bone and affect surrounding structures. For example, destabilization of a spine may result in alteration of a natural spacing between adjacent vertebrae. Alteration of a natural spacing between adjacent vertebrae may subject nerves that pass between vertebral bodies to pressure. Pressure applied to the nerves may cause pain and/or nerve damage. Maintaining the natural spacing between vertebrae may reduce pressure applied to nerves that pass between vertebral bodies. A spinal stabilization procedure may be used to maintain the natural spacing between vertebrae and promote spinal stability.

[0005] Spinal stabilization may involve accessing a portion of the spine through soft tissue. Conventional stabilization systems may require a large incision and/or multiple incisions in the soft tissue to provide access to a portion of the spine to be stabilized. Conventional procedures may result in trauma to the soft tissue, for example, due to muscle stripping.

[0006] Spinal stabilization systems for a lumbar region of the spine may be inserted during a spinal stabilization procedure using a posterior spinal approach. Conventional systems and methods for posterolateral spinal fusion may involve dissecting and retracting soft tissue proximate the surgical site. Dissection and retraction of soft tissue may cause trauma to the soft tissue, and extend recovery time. Minimally invasive procedures and systems may reduce recovery time as well as trauma to the soft tissue surrounding a stabilization site.

[0007] U.S. Pat. No. 6,530,929 to Justis et al. (hereinafter "Justis"), which is incorporated by reference as if fully disclosed herein, describes minimally invasive techniques and instruments for stabilizing a bony structure in an animal subject. Justis provides a method for using an instrument to connect at least two bone anchors with a connecting element. The instrument is secured to the anchors and manipulated to place the connecting element in a position more proximate the anchors. The Justis system is a constrained system. An elongated member installed using the Justis instruments and method must have a set curvature to function with the installation instruments.

[0008] U.S. Patent Publication No. U.S. 2004 0138662 to Landry et al. (hereinafter "Landry"), which is incorporated by reference as if fully disclosed herein, describes a minimally invasive procedure and instruments for stabilizing a portion of the spine. The Landry system is not a constrained system. An elongated member installed using the Landry instruments and method does not need to have a curvature defined by the insertion instruments.

SUMMARY

[0009] A spinal stabilization system may be installed in a patient to stabilize a portion of a spine. A spinal stabilization system may be installed using a minimally invasive procedure. An instrumentation kit may provide instruments and spinal stabilization system components necessary for forming a spinal stabilization system in a patient. The instrumentation kit may include a reducer. The reducer may be used with a spinal stabilization system formed in the patient. The reducer may change the distance in the anterio-posterior plane between adjacent vertebrae. The reducer may seat an elongated member of a spinal stabilization system in a collar of a bone fastener assembly that is coupled to a vertebra.

[0010] A spinal stabilization system may be used to achieve rigid pedicle fixation while minimizing the amount of damage to surrounding tissue. In some embodiments, a spinal stabilization system may be used to provide stability to two or more vertebrae. A spinal stabilization system may include an elongated member, two or more bone fastener assemblies, and/or closure members.

[0011] A bone fastener assembly may include, but is not limited to, a bone fastener and a collar. A first portion of the bone fastener may couple to a vertebra. A first portion of a collar may couple to a second portion of the bone fastener. A second portion of the collar may couple to an elongated member during use. In some embodiments, an orientation of the bone fastener may be independent of the orientation of the collar. After the bone fastener is placed in a vertebral body, the collar coupled to the bone fastener may be positioned so that the elongated member can be positioned in the collar and in at least one other collar that is coupled to another vertebral body by a bone fastener.

[0012] In some embodiments, when an elongated member is coupled to a first bone fastener assembly, the elongated member may not be seated in a collar of a second bone fastener assembly. A reducer may be used to seat the elongated member in the collar of the second bone fastener assembly. During an invasive surgical procedure, access to the collar of the second bone fastener and the elongated member may be sufficient to allow a reducer to be attached to the collar and to the elongated member to achieve reduction using the reducer. During a minimally invasive surgical procedure, direct access to the collar and the elongated member may not be possible. In some embodiments, a reducer may couple to an extender coupled to the collar and to the elongated member. In some embodiments, a reducer may couple to the extender coupled to the collar and to a sleeve coupled to the elongated member.

[0013] To achieve reduction of a first vertebra relative to a second vertebra, a first bone fastener assembly may be secured to a first vertebra. A second bone fastener assembly may be secured to a second vertebra. An elongated member may be positioned in a collar of the first bone fastener assembly. A closure member may be secured to the collar of the first bone fastener assembly to secure the position of the elongated member relative to the first vertebra and the first bone fastener assembly. A portion of the elongated member may extend to the second collar. A reducer may be coupled to the collar of the second bone fastener assembly and the

elongated member. The reducer may be used to seat the elongated member in the collar of the second bone fastener assembly. When the reducer seats the elongated member in the collar of the second bone fastener assembly, a closure member may be secured to the collar to fix the position of the elongated member relative to the second bone fastener assembly.

[0014] After the elongated member has been seated and secured in collars of bone fastener assemblies, imaging techniques may be used to confirm the position of the installed spinal stabilization system. When the spinal stabilization system is positioned as desired, a driver may be used to shear off tool portions of closure members. A counter torque wrench may be used to counteract force applied to the spinal stabilization system so that the force applied to shear the tool portion of a closure member is not transmitted to the patient.

BRIEF DESCRIPTION OF THE DRAWINGS

[0015] Advantages of the present invention will become apparent to those skilled in the art with the benefit of the following detailed description and upon reference to the accompanying drawings in which:

[0016] **FIG. 1** depicts a perspective view of an embodiment of a spinal stabilization system.

[0017] **FIG. 2** depicts a perspective view of an embodiment of a bone fastener assembly.

[0018] **FIG. 3** depicts a perspective view of an embodiment of a bone fastener.

[0019] **FIG. 4** depicts a perspective view of an embodiment of a bone fastener assembly ring.

[0020] **FIG. 5** depicts a perspective view of an embodiment of a bone fastener assembly collar.

[0021] **FIG. 6** depicts a cross-sectional view of an embodiment of a bone fastener assembly.

[0022] **FIG. 7** depicts a front view of an embodiment of a bone fastener assembly with a collar that allows for angulation of a bone fastener relative to the collar in a conical range of motion that is symmetrical relative to an axis that passes through a central axis of the collar and a central axis of a bone fastener.

[0023] **FIG. 8** depicts a perspective view of an embodiment of a closure member.

[0024] **FIG. 9** depicts a cross-sectional representation of the closure member taken substantially along plane **9-9** indicated in **FIG. 8**.

[0025] **FIG. 10** depicts a perspective view of an embodiment of a portion of a spinal stabilization system.

[0026] **FIG. 11** depicts a perspective view of an embodiment of a multi-channel extender.

[0027] **FIG. 12** depicts a top view of an embodiment of a multi-channel extender with a bone fastener assembly coupled to the extender.

[0028] **FIG. 13** depicts a cross-sectional representation of a portion of the extender with the bone fastener assembly taken substantially along line **13-13** of **FIG. 12**.

[0029] **FIG. 14** depicts a cross-sectional representation of a portion of the extender with the bone fastener assembly taken substantially along line **14-14** of **FIG. 12**.

[0030] **FIG. 15** depicts a perspective view of an embodiment of a single-channel extender.

[0031] **FIG. 16** depicts a perspective view of an embodiment of extenders coupled to bone fastener assemblies.

[0032] **FIG. 17** depicts an embodiment of a sleeve that functions as a counter torque wrench.

[0033] **FIG. 18** depicts a schematic view of the sleeve shown in **FIG. 17** coupled to an elongated member.

[0034] **FIG. 19** depicts a perspective view of an embodiment of a sleeve.

[0035] **FIG. 20** depicts a perspective view of an embodiment of a sleeve.

[0036] **FIG. 21** depicts an embodiment of an elongated member.

[0037] **FIG. 22** depicts an embodiment of an elongated member.

[0038] **FIG. 23** depicts an embodiment of an elongated member.

[0039] **FIG. 24** depicts an embodiment of an elongated member.

[0040] **FIG. 25** depicts a perspective view of an embodiment of a reducer coupled to an elongated member.

[0041] **FIG. 26** depicts a front view of an embodiment of a movement mechanism and handle of the reducer depicted in **FIG. 25**.

[0042] **FIG. 27** depicts a perspective view of an internal ring of a reducer embodiment.

[0043] **FIG. 28** depicts a perspective view of an embodiment of a reducer.

[0044] **FIG. 29** depicts a perspective view of an embodiment of a sleeve positioned over an extender coupled to a spinal stabilization system that may be used with the reducer depicted in **FIG. 28**.

[0045] **FIG. 30** depicts an embodiment of a spinal stabilization system before reduction.

[0046] **FIG. 31** depicts an embodiment of an unseated elongated member before reduction.

[0047] **FIG. 32** depicts an embodiment of a reducer coupled to an extender before reduction.

[0048] **FIG. 33** depicts an embodiment of a reducer coupled to an extender after reduction.

[0049] While the invention is susceptible to various modifications and alternative forms, specific embodiments thereof are shown by way of example in the drawings and will herein be described in detail. The drawings may not be to scale. It should be understood that the drawings and detailed description thereto are not intended to limit the invention to the particular form disclosed, but on the contrary, the intention is to cover all modifications, equivalents, and alternatives falling within the spirit and scope of the present invention as defined by the appended claims.

DETAILED DESCRIPTION

[0050] A spinal stabilization system may be installed in a patient to stabilize a portion of a spine. Spinal stabilization may be used, but is not limited to use, in patients having degenerative disc disease, spinal stenosis, spondylolisthesis, pseudoarthrosis, and/or spinal deformities; in patients having fracture or other vertebral trauma; and in patients after tumor resection. A spinal stabilization system may be installed using a minimally invasive procedure. An instrumentation set may include instruments and spinal stabilization system components for forming a spinal stabilization system in a patient and for facilitating reduction of one or more vertebral bodies.

[0051] A minimally invasive procedure may be used to limit an amount of trauma to soft tissue surrounding vertebrae that are to be stabilized. In some embodiments, the natural flexibility of skin and soft tissue may be used to limit the length and/or depth of an incision or incisions needed during the stabilization procedure. Minimally invasive procedures may provide limited direct visibility in vivo. Forming a spinal stabilization system using a minimally invasive procedure may include using tools to position system components in the body.

[0052] A minimally invasive procedure may be performed after installation of one or more spinal implants in a patient. The spinal implant or spinal implants may be inserted using an anterior procedure and/or a lateral procedure. The patient may be turned and a minimally invasive procedure may be used to install a posterior spinal stabilization system. A minimally invasive procedure for stabilizing the spine may be performed without prior insertion of one or more spinal implants in some patients. In some patients, a minimally invasive procedure may be used to install a spinal stabilization system after one or more spinal implants are inserted using a posterior spinal approach.

[0053] A spinal stabilization system may be used to achieve rigid pedicle fixation while minimizing the amount of damage to surrounding tissue. In some embodiments, a spinal stabilization system may be used to provide stability to two adjacent vertebrae (i.e., one vertebral level). A spinal stabilization system may include two bone fastener assemblies. One bone fastener assembly may be positioned in each of the vertebrae to be stabilized. An elongated member may be coupled and secured to the bone fastener assemblies. As used herein, "coupled" components may directly contact each other or may be separated by one or more intervening members. In some embodiments, a single spinal stabilization system may be installed in a patient. Such a system may be referred to as a unilateral, single-level stabilization system or a single-level, two-point stabilization system. In some embodiments, two spinal stabilization systems may be installed in a patient on opposite sides of a spine. Such a system may be referred to as a bilateral, single-level stabilization system or a single-level, four-point stabilization system.

[0054] In some embodiments, a spinal stabilization system may provide stability to three or more vertebrae (i.e., two or more vertebral levels). In a two vertebral level spinal stabilization system, the spinal stabilization system may include three bone fastener assemblies. One bone fastener assembly may be positioned in each of the vertebrae to be stabilized. An elongated member may be coupled and secured to the three bone fastener assemblies. In some embodiments, a single two-level spinal stabilization system may be installed in a patient. Such a system may be referred to as a unilateral, two-level stabilization system or a two-level, three-point stabilization system. In some embodiments, two three-point spinal stabilization systems may be installed in a patient on opposite sides of a spine. Such a system may be referred to as a bilateral, two-level stabilization system or a two-level, six-point stabilization system.

[0055] In some embodiments, combination systems may be installed. For example, a two-point stabilization system may be installed on one side of a spine, and a three-point stabilization system may be installed on the opposite side of the spine. The composite system may be referred to a five-point stabilization system.

[0056] Minimally invasive procedures may reduce trauma to soft tissue surrounding vertebrae that are to be stabilized. Only a small opening may need to be made in a patient. For example, for a single-level stabilization procedure on one side of the spine, the surgical procedure may be performed through a 2 cm to 4 cm incision formed in the skin of the patient. In some embodiments, the incision may be above and between the vertebrae to be stabilized. Dilators, a targeting needle, and/or a tissue wedge may be used to provide access to the vertebrae to be stabilized without the need to form an incision with a scalpel through muscle and other tissue between the vertebrae to be stabilized. A minimally invasive procedure may reduce an amount of post-operative pain felt by a patient as compared to invasive spinal stabilization procedures. A minimally invasive procedure may reduce recovery time for the patient as compared to invasive spinal procedures.

[0057] Components of spinal stabilization systems may be made of materials including, but not limited to, titanium, titanium alloys, stainless steel, ceramics, and/or polymers. Some components of a spinal stabilization system may be autoclaved and/or chemically sterilized. Components that may not be autoclaved and/or chemically sterilized may be made of sterile materials. Components made of sterile materials may be placed in working relation to other sterile components during assembly of a spinal stabilization system.

[0058] Spinal stabilization systems may be used to correct problems in lumbar, thoracic, and/or cervical portions of a spine. Various embodiments of a spinal stabilization system may be used from the C1 vertebra to the sacrum. For example, a spinal stabilization system may be implanted posterior to the spine to maintain distraction between adjacent vertebral bodies in a lumbar portion of the spine.

[0059] **FIG. 1** depicts an embodiment of spinal stabilization system **100** that may be implanted using a minimally invasive surgical procedure. Spinal stabilization system **100** may include bone fastener assemblies **102**, elongated member **104**, and/or closure members **106**. Other spinal stabilization system embodiments may include, but are not limited to, plates, dumbbell-shaped members, and/or transverse connectors. **FIG. 1** depicts a spinal stabilization system for one vertebral level. In some embodiments, the spinal stabilization system of **FIG. 1** may be used as a multi-level spinal stabilization system if one or more vertebrae are located between the vertebrae in which bone fastener assemblies **102** are placed. In other embodiments, multi-level spinal

stabilization systems may include additional bone fastener assemblies to couple to one or more other vertebrae.

[0060] **FIG. 2** depicts a perspective view of bone fastener assembly **102**. **FIGS. 3-5** depict embodiments of bone fastener assembly components. Components of bone fastener assembly **102** may include, but are not limited to, bone fastener **108** (shown in **FIG. 3**), ring **110** (shown in **FIG. 4**), and collar **112** (shown in **FIG. 5**). Bone fastener **108** may couple bone fastener assembly **102** to a vertebra. Ring **110** may be positioned between a head of bone fastener **108** and collar **112**.

[0061] **FIG. 6** depicts a cross-sectional representation of bone fastener **108**, ring **110**, and collar **112** of bone fastener assembly **102**. Bone fastener **108** of bone fastener assembly **102** may include passage **114**. A guide wire may be placed through passage **114** so that bone fastener **108** may be inserted into a vertebra at a desired location and in a desired angular orientation relative to the vertebra with limited or no visibility of the vertebra.

[0062] A bone fastener may be, but is not limited to, a bone screw, a ring shank fastener, a barb, a nail, a brad, or a trocar. Bone fasteners and/or bone fastener assemblies may be provided in various lengths in an instrumentation set to accommodate variability in vertebral bodies. For example, an instrumentation set for stabilizing vertebrae in a lumbar region of the spine may include bone fastener assemblies with lengths ranging from about 30 mm to about 75 mm in 5 mm increments.

[0063] **FIG. 3** depicts an embodiment of bone fastener **108**. Bone fastener **108** may include shank **116**, head **118**, and neck **120**. Shank **116** may include threading **122**. In some embodiments, threading **122** may include self-tapping start **124**. Self-tapping start **124** may facilitate insertion of bone fastener **108** into vertebral bone.

[0064] Head **118** of bone fastener **108** may include various configurations to engage a driver that inserts the bone fastener into a vertebra. In some embodiments, the driver may also be used to remove an installed bone fastener from a vertebra. In some embodiments, head **118** may include one or more tool portions **126**. Tool portions **126** may be recesses and/or protrusions designed to engage a portion of the driver.

[0065] Head **118** of bone fastener **108** may include one or more splines **128**, as depicted in **FIG. 3**. In some head embodiments, head **118** may include three splines. Splines **128** may be equally spaced circumferentially around head **118** of bone fastener **108**. In some head embodiments, splines **128** may be spaced at unequal distances circumferentially around head **118**. Splines **128** may include various surface configurations and/or texturing to enhance coupling of bone fastener **108** with a ring of a bone fastener assembly. In some embodiments, sides of the splines may be tapered so that the splines form a dovetail connection with a ring. In some embodiments, spline width may be tapered so that a good interference connection is established when the bone screw is coupled to a ring. Splines **128** may include one or more projections **130** to facilitate coupling bone fastener **108** with an inner surface of a ring. In some embodiments, projections **130** may be positioned on a lower portion of splines **128**. In some embodiments, the splines may include recessed surfaces that accept projections extending from surfaces of the ring.

[0066] Neck **120** of bone fastener **108** may have a smaller diameter than adjacent portions of head **118** and shank **116**. The diameter of neck **120** may fix the maximum angle that the collar of the bone fastener assembly can be rotated relative to bone fastener **108**. In some embodiments, neck **120** may be sized to allow up to about 40° or more of angulation of the collar relative to the bone fastener. In some embodiments, the neck may be sized to allow up to about 30° of angulation of the collar relative to the bone fastener. In some embodiments, the neck may be sized to allow up to about 20° of angulation of the collar relative to the bone fastener.

[0067] **FIG. 4** depicts a perspective view of an embodiment of ring **110**. Outer surface **132** of ring **110** may have a contour that substantially complements a contour of an inner surface of a collar in which the ring resides. A contour of the outer surface of the ring may be a spherical portion. When the ring is positioned in the collar, the complementary shape of the ring outer surface and the inner surface of the collar that contacts the ring allows angulation of the collar relative to a bone fastener coupled to the ring. The contour of the outer surface of the ring and the inner surface of the collar may inhibit removal of the ring from the collar after insertion of the ring into the collar.

[0068] Outer surface **132** of ring **110** may have a smooth finish. In some embodiments, outer surface **132** may be surface treated or include coatings and/or coverings. Surface treatments, coatings, and/or coverings may be used to adjust frictional and/or wear properties of the outer surface of the ring.

[0069] An inner surface of ring **110** may include one or more grooves **134** and/or one or more seats **136**. Seats **136** may be circumferentially offset from grooves **134**. Grooves **134** may be sized to allow passage of splines of a bone fastener (e.g., splines **128** shown in **FIG. 3**) through the ring. When the splines are inserted through grooves **134**, the bone fastener may be rotated until the splines align with seats **136**. The bone fastener may be pulled or driven so that the splines are positioned in seats **136**. In some embodiments, projections (e.g., projections **130** in **FIG. 3**) may pass over ridges **138** of ring **110**. Passage of the projections over ridges **138** may securely couple the bone fastener to the ring and inhibit separation of the ring from the bone fastener.

[0070] As used herein, the term "collar" includes any element that wholly or partially encloses or receives one or more other elements. A collar may enclose or receive elements including, but not limited to, a bone fastener, a closure member, a ring, and/or an elongated member. In some embodiments, a collar may couple two or more other elements together (e.g., an elongated member and a bone fastener). In some embodiments, a collar may have a "U" shape, however it is to be understood that a collar may also have other shapes.

[0071] Collar **112** may include body **140** and arms **142**. Arms **142** may extend from body **140**. Body **140** of collar **112** may be greater in width than a width across arms **142** of collar **112** (i.e., body **140** may have a maximum effective outer diameter greater than a maximum effective outer diameter of arms **142**). A reduced width across arms **142** may allow an extender to be coupled to the arms without substantially increasing a maximum effective outer diameter along a length of collar **112**. Thus, a reduced width across arms **142** may reduce bulk at a surgical site.

[0072] Inner surfaces of arms **142** may include threading **144**. Threading **144** may engage complementary threading of a closure member to secure an elongated member to a bone fastener assembly.

[0073] Arms **142** and body **140** may form slot **146**. Slot **146** may be sized to receive an elongated member. When an elongated member is positioned in slot **146**, a portion of the elongated member may contact a head of a bone fastener positioned in the collar.

[0074] Arms **142** may include ridges or flanges **148**. Flange **148** may allow collar **112** to be coupled to an extender so that translational motion of the collar relative to the extender is inhibited. Flanges **148** may also include notches **150**. A movable member of an extender may extend into notch **150**. When the movable member is positioned in notch **150**, a channel in the extender may align with a slot in collar **112**. With the movable member positioned in notch **150**, rotational movement of collar **112** relative to the extender may be inhibited.

[0075] A bone fastener may be positioned in a collar such that the bone fastener is able to move radially and/or rotationally relative to the collar (or the collar relative to the bone fastener) within a defined range of motion. Motion of the bone fastener relative to the collar (or the collar relative to the bone fastener) may be referred to as "angulation" and/or "polyaxial movement". **FIG. 7** depicts bone fastener assembly **102** with central axis **152** of collar **112** aligned with central axis **154** of bone fastener **108**. Bone fastener **108** may be angulated in a symmetrical conical range of motion characterized by angle α about the aligned axes. Bone fastener **108** may be constrained from motion outside of limit axis **156** by contact between neck **120** of bone fastener **108** and collar **112**. Alignment of axis **154** of bone fastener **108** with central axis **152** of collar **112** may be considered a neutral position relative to the range of motion. The alignment is a neutral position because bone fastener **108** may be angulated an equal amount in any direction from central axis **152**. When a driver is inserted into bone fastener **108**, axis **154** of bone fastener **108** may be substantially aligned with axis **152** of collar **112** to facilitate insertion of the bone fastener into a vertebral body.

[0076] A closure member may be coupled to a collar of a bone fastener assembly to fix an elongated member positioned in the collar to the bone fastener assembly. **FIG. 1** depicts closure members **106** coupled to bone fastener assemblies **102**. **FIG. 8** depicts closure member **106** prior to insertion of the closure member into a collar of a bone fastener assembly. Closure member **106** may include tool portion **158** and male threading **160**. Tool portion **158** may couple to a tool that allows closure member **106** to be positioned in a collar. Tool portion **158** may include various configurations (e.g., threads, hexalobular connections, hexes) for engaging a tool (e.g., a driver). Male threading **160** may have a shape that complements the shape of female threading in arms of a collar (e.g., threading **144** depicted in **FIG. 5**).

[0077] **FIG. 9** depicts a cross-sectional representation of closure member **106** taken substantially along plane **9-9** of **FIG. 8**. Closure member **106** may include removal openings **162**. A drive tool may be inserted into removal openings **162** to allow removal of closure member **106** after tool portion **158** has been sheared off. Removal openings **162** may include any of a variety of features including, but not limited to, sockets, holes, slots, and/or combinations thereof. In an embodiment, removal openings **162** are holes that pass through bottom surface **164** of closure member **106**.

[0078] A bottom surface of a closure member may include structure and/or texturing that promotes contact between the closure member and an elongated member. A portion of the structure and/or texturing may enter and/or deform an elongated member when the closure member is coupled to the elongated member. Having a portion of the closure member enter and/or deform the elongated member may couple the elongated member to the closure member and a bone fastener assembly so that movement of the elongated member relative to the bone fastener assembly is inhibited. In a closure member embodiment, such as the embodiment depicted in **FIG. 9**, bottom surface **164** of closure member **106** may include point **166** and rim **168**. In some embodiments, rim **168** may come to a sharp point. In some embodiments, a height of rim **168** may be less than a height of point **166**. In other embodiments, a height of rim **168** may be the same or larger than a height of point **166**. In some embodiments, rim **168** may not extend completely around the closure member. For example, eight or more portions of rim **168** may be equally spaced circumferentially around closure member **106**. In certain embodiments, a solid central core including point **166** and rim **168** may enhance the ability of closure member **106** to secure an elongated member in a collar.

[0079] **FIG. 10** depicts a portion of a spinal stabilization system with closure member **106** coupled to collar **112** before tool portion **158** is sheared off. Closure member **106** may couple to collar **112** by a variety of systems including, but not limited to, standard threads, modified threads, reverse angle threads, buttress threads, or helical flanges. Closure member **106** may be advanced into an opening in a collar to engage a portion of elongated member **104**. In some embodiments, closure member **106** may inhibit movement of elongated member **104** relative to collar **112**.

[0080] Various instruments may be used in a minimally invasive procedure to form a spinal stabilization system in a patient. The instruments may include, but are not limited to, positioning needles, guide wires, dilators, bone awls, bone taps, sleeves, extenders, drivers, tissue wedges, elongated member length estimating tools, mallets, tissue retractors, and tissue dilators. The instruments may be provided in an instrumentation set. The instrumentation set may also include components of the spinal stabilization system. The components of the spinal stabilization system may include, but are not limited to, bone fastener assemblies of various sizes and/or lengths, elongated members, and closure members.

[0081] Instruments used to install a spinal stabilization system may be made of materials including, but not limited to, stainless steel, titanium, titanium alloys, ceramics, and/or polymers. Some instruments may be autoclaved and/or chemically sterilized. Some instruments may be, or may include, components that cannot be autoclaved or chemically sterilized. Instruments or components of instruments that cannot be autoclaved or chemically sterilized may be made of sterile materials.

[0082] An extender may be used as a guide to install bone fasteners of a bone fastener assembly in vertebral bone. An

extender may be coupled to a collar of a bone fastener assembly. A distal end of an extender may be tapered or angled to reduce bulk at a surgical site. Instruments may be inserted into the extender to manipulate the bone fastener assembly. Movement of the extender may alter an orientation of a collar relative to a bone fastener of the bone fastener assembly. In some embodiments, an extender may be used as a retractor during a spinal stabilization procedure.

[0083] An extender for a single-level vertebral stabilization system may include one or more channels in a wall of the extender to allow access to an adjacent vertebra. For some single-level vertebral stabilization procedures, only single-channel extenders (i.e., extenders with a single channel in a wall of the extender) may be used. For other single-level vertebral stabilization procedures, one or more multi-channel extenders (i.e., extenders with two or more channels in a wall of the extender) may be used. Channels may provide flexibility to or enhance flexibility of a multi-channel extender. In some embodiments, a proximal portion of a multi-channel extender may have a solid circumference. A region of solid circumference in a multi-channel extender may enhance stability of the multi-channel extender. In some embodiments, a multi-channel extender may be longer than a single-channel extender.

[0084] An extender used at a middle vertebra in a multi-level stabilization procedure may be a multi-channel extender. Channels in a multi-channel extender may allow access to adjacent vertebrae from a middle vertebra. An extender used at an end vertebra of a multi-level stabilization system may be a single-channel extender or a multi-channel extender. A system for coupling a bone fastener assembly to a multi-channel extender may include a limiter that inhibits spreading of arms of the extender to inhibit release of the bone fastener assembly from the extender.

[0085] Instruments may access a bone fastener assembly through a passage in an extender. In some embodiments, a channel in a wall of an extender may extend a full length of the extender. In some embodiments, especially in embodiments of multi-channel extenders, a channel in a wall of an extender may extend only a portion of the length of the extender. A channel may extend to a distal end of an extender such that an elongated member inserted in the channel may pass from the extender into a slot of a collar of a bone fastener assembly coupled to the extender.

[0086] A channel in an extender may be any of a variety of shapes. A channel may have a width that exceeds a width (e.g., a diameter) of an elongated member that is to be inserted in the channel. In some embodiments, a channel may be a linear opening parallel to a longitudinal axis of the extender.

[0087] Movable members may extend through portions of an extender proximate a channel in the extender. Movable members may engage notches in a collar to establish a radial orientation of the extender on the collar and/or to inhibit rotation of the collar relative to the extender. In some embodiments, a distal end of a movable member may be a projection that engages an opening in a collar. In certain embodiments, a proximal end of a movable member may include a tool portion. The tool portion may facilitate engaging the collar with the extender.

[0088] **FIG. 11** depicts an embodiment of extender **170**. Extender **170** may be a multi-channel extender. Extender **170** may include wall **172**, channels **174**, passage **176**, movable members **178**, and flange **180**. Channels **174** may extend from a distal end of extender **170** through a portion of wall **172**. Channels **174** may allow instruments to be positioned and used to form a plane through soft tissue to one or more adjacent vertebrae. An elongated member may be inserted in the tissue plane and positioned in collars of bone fastener assemblies anchored in vertebrae and coupled to extenders. Passage **176** may allow instruments to be positioned and used to manipulate a bone fastener assembly that is coupled to a distal end of extender **170**. Movable members **178** may be part of a system that couples a bone fastener assembly to extender **170**. In some embodiments, movable members **178** may include tool portion **182**. A driver may be positioned in tool portion **182**. The driver (e.g., a hex wrench) may be used to extend or retract a distal end of movable member **178**. A distal end of extender **170** may include flange **180** that mates with a complementary flange on a collar of a bone fastener assembly. A distal end of extender **170** may be tapered to reduce bulk (e.g., reduce spin diameter) at a surgical site.

[0089] **FIG. 12** depicts a top view of an embodiment of extender **170** coupled to a bone fastener assembly. Tool portion **126** of bone fastener **108** is a hexalobular connection.

[0090] **FIG. 13** depicts a cross-sectional representation of a portion of extender **170** with bone fastener assembly **102** taken substantially along line **13-13** of **FIG. 12**. Flange **180** of extender **170** may mate with flange **148** of collar **112** to inhibit translation of the extender relative to the collar. Extender **170** may also include stop **184**. Stop **184** may engage a portion of collar **112** to inhibit separation of walls **172**. During use, stop **184** may inhibit undesired separation of bone fastener assembly **102** from extender **170**.

[0091] **FIG. 14** depicts a cross-sectional representation of a portion of extender **170** with bone fastener assembly **102** and elongated member **104** taken substantially along line **14-14** of **FIG. 12**. Distal ends of movable members **178** may extend into notches (e.g., notches **150** depicted in **FIG. 5**) in collar **112**. Portions of walls **172** of extender **170** may include threading. Portions of movable members **178** may include threading complementary to threaded portions of walls **172**. Threading of movable members **178** may engage threading in walls **172** such that rotation of the movable members advances or retracts the movable members relative to the walls.

[0092] As shown in **FIG. 14**, collar **112** may be designed such that elongated member **104** lies below a distal end of extender **170**. Coupling extender **170** to collar **112** above elongated member **104** may reduce bulk at a surgical site. With elongated member **104** coupled to collar **112** below a distal end of extender **170**, the extender may be removed without interference from the elongated member of a spinal stabilization system.

[0093] **FIG. 15** depicts an embodiment of extender **170**. Extender **170** may be a single-channel extender for use in single-level or multi-level spinal stabilization procedures. Extender **170** may be used at the outermost vertebrae to be stabilized during installation of a multi-level vertebral stabilization system. Extender **170** may be coupled to a collar of a bone fastener assembly with movable members **178** and/or flange **180**. Instruments may be inserted through

passage **176** of extender **170** to access an anchored bone fastener assembly coupled to the extender. An instrument may be moved through channel **174** toward an adjacent vertebra to form a tissue plane in soft tissue between extender **170** and the adjacent vertebra.

[**0094**] An extender may be coupled to a collar of a bone fastener assembly in various ways. When an extender is coupled to a collar, rotation and translation of the extender relative to the collar may be inhibited. A system used to couple an extender and collar should be simple, inexpensive to implement, and should not significantly weaken the mechanical strength of the collar and/or the extender. Extenders may be coupled to collars using various coupling systems including, but not limited to, flanges, threaded connections, interlocking connections (e.g., ratcheting connection systems), and/or interference fits.

[**0095**] Extenders may be of various lengths. Extenders of different lengths may be used in the same surgical procedure. An extender length used in a spinal stabilization procedure may be determined by a patient's anatomy. Extenders may be just short enough to allow manipulation by a medical practitioner above an incision in a patient. A multi-channel extender may be longer than a single-channel extender.

[**0096**] When bone fasteners of polyaxial bone fastener assemblies are positioned in vertebral bone, extenders coupled to collars of the bone fastener assemblies may be moved in desired positions. During surgery, an extender in a patient may be oriented towards an adjacent vertebra that is to be stabilized to reduce the required incision size. In some embodiments, channels of the extenders may be aligned so that an elongated member may be positioned in collars of the bone fastener assemblies. **FIG. 16** depicts an orientation of three extenders. Extenders **170**, **170'** may couple to collars **112**, **112'**. Bone fasteners **108**, **108'** may be inserted into vertebrae. Single-channel extenders **170** may be coupled to collars **112** before insertion of bone fasteners **108** into two outer pedicles to be stabilized. Multi-channel extender **170'** may be coupled to collar **112'** before insertion of bone fastener **108'** into a central pedicle of the three adjacent pedicles. Single-channel extenders **170** may be angled towards multi-channel extender **170'**. Channels of the extenders may be aligned so that an elongated member may be moved down the extenders and into collars of the bone fastener assemblies.

[**0097**] After a bone fastener assembly is coupled to an extender, a driver may be coupled to a bone fastener of the bone fastener assembly. The driver may be used to insert the bone fastener into vertebral bone.

[**0098**] After bone fastener assemblies are installed and an elongated member is placed in the bone fastener assemblies, closure members may be secured to the bone fastener assemblies. When a closure member is threaded on a bone fastener assembly, a counter torque wrench may be used to inhibit the application of torque to the spine of the patient. A counter torque wrench may hold an extender that is coupled to a collar as the tool portion of a closure member is sheared off. In certain embodiments, about 90 in-lbs. of torque may be required to shear off the tool portion of a closure member.

[**0099**] In some embodiments, a counter torque wrench may inhibit application of torque to a patient during tightening of a closure member and/or during shearing of a tool portion of the closure member by applying a force to an elongated member to counter force applied to a bone fastener assembly by rotation of the closure member. The counter torque wrench may be a sleeve. **FIG. 17** depicts an embodiment of a counter torque wrench that is a sleeve that couples to an elongated member. Sleeve **186** may include hollow shaft **188** and handle **190**. Groove **192** may be located at a distal end of hollow shaft **188**. **FIG. 18** depicts sleeve **186** fitted over a multi-channel extender. In an embodiment, hollow shaft **188** may be inserted through an opening in the body over extender **170** and advanced toward the spine until elongated member **104** is seated in groove **192**. Sleeve **186** may engage the spinal stabilization system. Force may be applied to sleeve **186** in a direction opposite to rotational force applied to a driver used to tighten and/or shear off a tool portion of a closure member. During a minimally invasive spinal stabilization procedure, sleeve **186** may be used with various types of extenders, including single-channel extenders and multi-channel extenders.

[**0100**] In some embodiments, a shape of a hollow shaft of a sleeve may be configured to engage walls of an extender. The sleeve may include one or more flat portions. When a sleeve that is configured to engage a wall of an extender is placed over the extender, a rotational force applied to the sleeve may be transferred to the extender. The force applied to the extender may counter torque applied to a closure member. **FIG. 19** depicts an embodiment of sleeve **186** configured to engage a single-channel extender. **FIG. 20** depicts an embodiment of sleeve **186** configured to engage a multi-channel extender. Sleeves included in an instrument set may include indicia and/or color-coding to indicate the type of extender the sleeves are to be used with. As depicted in **FIG. 20**, some sleeve embodiments may include groove **192** configured to engage an elongated member of a stabilization system. As depicted in **FIG. 19**, some sleeve embodiments may not include a groove.

[**0101**] A hollow shaft of a sleeve may have a length that is less than a length of an extender that the sleeve is to be used with. For example, a length of a hollow shaft of a sleeve may be chosen such that a proximal portion of the extender protrudes from the proximal opening of the sleeve after positioning of the sleeve over the extender and against an elongated member during a spinal stabilization procedure. **FIG. 19** depicts an embodiment of sleeve **186** with relatively short hollow shaft **188**. **FIG. 20** depicts an embodiment of sleeve **186** with relatively long hollow shaft **188**.

[**0102**] Handle **190** of sleeve **186** may be of various shapes or designs. In some embodiments, a shape of handle **190** may facilitate gripping of sleeve **186**. Handle **190** may include a cut-out portion to facilitate gripping and/or to reduce the weight of the sleeve. In certain embodiments, a shape of handle **190** may be tapered toward hollow shaft **188**, as depicted in **FIGS. 19 and 20**, to reduce interference and/or increase visibility of a surgical site.

[**0103**] An elongated member may be used to provide a desired shape to the spine of patient. Elongated members may have shapes including, but not limited to, straight, bent, curved, s-shaped, and z-shaped. **FIG. 21** depicts an embodiment of S-shaped elongated member **104**. **FIG. 22** depicts an embodiment of angled elongated member **104**. **FIG. 23** depicts an embodiment of bent elongated member **104**. **FIG.**

24 depicts an embodiment of straight elongated member **104**. An instrumentation kit for a spinal stabilization system may include straight rods and/or pre-shaped rods. Straight rods and/or pre-shaped rods may be contoured to accommodate patient anatomy if needed during the surgical procedure.

[**0104**] In some embodiments, reducing one or more vertebral bodies to the shape of an elongated member (e.g., a contoured elongated member) may be indicated. Reduction of a vertebral body during a spinal stabilization procedure may include forcing the vertebral body into a position determined by the contour of the elongated member used in the spinal stabilization system.

[**0105**] During a spinal stabilization procedure, a first portion of an elongated member may be seated in a collar of a first bone fastener assembly that is coupled to a first vertebra. A closure member may be coupled to the collar and the elongated member to seat the elongated member fully in the collar and to fix the position of the elongated member relative to the first bone fastener assembly. A second portion of the elongated member may be positioned adjacent to a collar of a second bone fastener assembly that is coupled to a second vertebra. The position of the second vertebra and/or the shape of the elongated member may inhibit the second portion of the elongated member from being fully seated in the collar of the second bone fastener assembly. A reducer may be coupled to the elongated member and to the collar of the second bone fastener assembly. The reducer may be used to fully seat the second portion of the elongated member in the collar of the second bone fastener assembly. While the reducer holds the second portion of the elongated member seated in the collar of the second bone fastener assembly, a driver may be used to secure a closure member to the collar to fix the position of the elongated member relative to the collar. Radiological imaging may be used to determine when the reducer has fully seated the second portion of the elongated member in the collar of the second bone fastener assembly.

[**0106**] Reducers may be used during a minimally invasive surgical procedure or during procedures where access to an elongated member and working room are restricted. During a minimally invasive procedure or a procedure with limited access and/or limited working room, a reducer may be used to pull an extender coupled to a bone fastener assembly of a spinal stabilization system upward (e.g., away from the spine) to seat the elongated member in a collar of the bone fastener assembly. Movement of a reducer may be achieved by, but is not limited to being achieved by, use of threading, cam action, linkage arms, or a combination thereof.

[**0107**] **FIG. 25** depicts an embodiment of reducer **194** for reduction of a vertebral body coupled to a spinal stabilization system. Reducer **194** may include handle **196**, hollow shaft **198**, cage **200**, movement assembly **202** and grip **204** of a release mechanism. Hollow shaft **198** may be welded or otherwise fixed to cage **200**. **FIG. 26** depicts a front view representation of an embodiment of movement assembly **202** and handle **196**. Movement assembly **202** may include rotator **206**, threaded shaft **208**, ring **210**, and release mechanism **212**. Handle **196** may include shank **214**, base **216** and threaded collar **218**. Shank **214** may be welded or otherwise coupled to base **216** and threaded collar **218**. Threaded collar **218** may be threaded on threaded shaft **208** before ring **210** is welded or otherwise fixed to the threaded shaft.

[**0108**] As depicted in **FIG. 25**, ring **210** and release mechanism **212** may be placed in cage **200**. An outer diameter of ring **210** and an outer diameter of release mechanism **212** may be slightly smaller than an inner diameter of cage **200**. Stops **220** may be press fit, threaded or otherwise positioned in cage **200**. An upper surface of ring **210** may contact stops **220** to inhibit separation of movement assembly **202** from cage **200**.

[**0109**] Base **216** of handle **196** may include four or more slots **222**. Slots **222** may engage stops **220** in cage **200**. When slots **222** engage stops **220**, rotation of shank **214** rotates cage **200** and hollow shaft **198**. Orientation of handle **196** relative to groove **224** may be changed when ring **210** is positioned towards a bottom portion of cage **200**. When ring **210** is positioned towards the bottom of cage **200**, handle **196** may be lifted to remove base **216** from stops **220**. Handle **196** may be rotated, and then lowered so that stops **220** engage slots **222** in base **216**. Groove **224** may complement elongated member **104** so that counter torque may be applied to torque applied to collar **112** when a driver is used to secure a closure member to the collar.

[**0110**] A position of ring **210** relative to handle **196** may be changed by turning rotator **206** of movement assembly **202**. In some embodiments, clockwise rotation of rotator **206** may draw ring **210** towards handle **196**, and counter-clockwise rotation of the rotator may move the ring away from the handle.

[**0111**] Ring **210** may include an internal ring. **FIG. 27** shows a perspective view of an embodiment of internal ring **226**. Internal ring may include a passage sized to allow an extender to pass through the ring. Internal ring **226** may include a pair of movable pins **228** seated in angled slots **230**. When the hollow shaft of a reducer is placed over an extender and moved towards an elongated member, a top of the extender may contact movable pins **228** and push the movable pins upwards in angled slots **230**. After the top of the extender passes by movable pins **228**, the movable pins fall back to the bottom of angled slots **230**. If ring **210** moves upwards in cage **200**, movable pins **228** engage a flange of the extender to translate the extender upward along with the ring.

[**0112**] An embodiment of a release mechanism is depicted in **FIG. 26**. Release mechanism **212** may be used to release an extender held by movable pins of ring **210**. Release mechanism **212** may include platform **232**, holders **234**, pin engagers **236** and grip **204**. Holders **234** may be positioned through platform **232**. Holders **234** may be fixed to ring **210**. Pin engagers **236** may be fixed to platform **232**. Pin engagers **236** may slide in ring **210**. Ends of pin engagers **236** are able to contact the movable pins in angled slots in ring **210**. When grip **204** is grasped and moved towards ring **210** to move platform **232** towards the ring, the ends of pin engagers **236** contact the movable pins and move the movable pins in the angled slots in ring **210** so that the pins do not engage a flange of the extender. Moving the movable pins so that the movable pins do not engage the flange of the extender allows a user to grasp handle **196** and remove the reducer from the extender.

[**0113**] To use the reducer depicted in **FIG. 25**, rotator **206** may be turned to move ring **210** towards a bottom of cage **200**. Hollow shaft **198** may be placed over an extender that is coupled to collar **112** of a bone fastener assembly. Hollow

shaft **198** may be moved downwards until an end of the hollow shaft contacts elongated member **104** positioned in or above collar **112**. Handle **196** may be rotated to position elongated member **104** in groove **224** of reducer **194**. If desired, an orientation of handle **196** relative to elongated member **104** may be adjusted.

[**0114**] Rotator **206** may be rotated to move ring **210** towards handle **196**. As ring **210** moves towards handle **196**, movable pins in the ring engage a flange of the extender and move the extender towards the handle, seating elongated member **104** in collar **112**. When elongated member **104** is fully seated in collar **112**, a closure member coupled to a driver may be introduced through reducer **194** to the collar. The driver may be used to secure the closure member to collar **112**. Reducer **194** may be used to provide counter torque to the force applied by the closure member to the collar.

[**0115**] In some embodiments, a reducer may be used with one or more other instruments to achieve reduction of a vertebral body coupled to a spinal stabilization system. **FIG. 28** depicts an embodiment of reducer **194** that may be used in combination with extender **170** and sleeve **186** depicted in **FIG. 29**. The reducer may be used to seat elongated member **104** in collar **112** of bone fastener assembly **102** when the bone fastener assembly is coupled to a vertebra. The reducer may be a forceps-type instrument designed to couple to recesses **238** in extender **170** and pull the extender upward while pushing elongated member **104** into collar **112**.

[**0116**] As shown in **FIG. 28**, reducer **194** may include grips **240**, locking mechanism **242**, base **244**, arms **246**, and bosses **248**. Movement of grips **240** away from each other may separate (e.g., open or increase a distance between) arms **246** of reducer **194**. When arms **246** are separated, bosses **248** may be positioned adjacent to recesses of an extender. Grips **240** may be moved towards each other to position bosses **248** in the recesses of the extender. Bosses **248** may complement recesses in the extender so that reducer **194** may be rotated about the extender. In some embodiments, the reducer may include recesses, and the extender may include protrusions that fit within the recesses of the reducer during use. Locking mechanism **242** may fix the position of arms **246** relative to each other to inhibit separation of the arms when bosses **248** are positioned in recesses of the extender. In some embodiments, locking mechanism **242** may be interlocking teeth that form a ratchet system. Base **244** may be between bosses **248** and grips **240**. Base **244** may function as a fulcrum during use. Bosses **248** may be offset from the same plane as grips **240**. Reducer **194** may have a long length between base **244** and grips **240**. The length of reducer **194** from base **244** to grips **240** may function as a lever arm during use.

[**0117**] During use, base **244** of reducer **194** may be placed on the handle of a sleeve. Grips **240** may be rotated towards the handle to move the extender upwards relative to the sleeve. Base **244** may function as a fulcrum of a lever system that moves the extender upwards relative to the sleeve. Moving the extender upwards relative to the sleeve may seat an elongated member in a collar that is coupled to the extender. When the elongated member is seated in the collar, a closure member coupled to a driver may be inserted through the extender to the collar. The closure member may be coupled to the collar. Counter torque to the force applied to the collar by the closure member may be applied to the sleeve.

[**0118**] Bone fastener assemblies that are coupled to extenders may be positioned in pedicles of vertebrae that are to be stabilized. An elongated member may be cut to length and contoured as desired. A medical practitioner may use experience and judgment to determine curvature of the elongated member for a patient. Determination of a desired curvature for the elongated member may be facilitated using radiological images of the patient. In some embodiments, a curvature of the elongated member may be chosen such that, when the elongated member is secured to the collars of the bone fastener assemblies, extenders coupled to the bone fastener assemblies cross at a surface of the skin. Crossing of the extenders at a surface of the skin allows the medical practitioner to minimize trauma to the patient. The elongated member may be bent or shaped with a tool (e.g., a rod bender) to allow insertion of the elongated member through channels of extenders with various spatial locations and/or various angular orientations.

[**0119**] Prior to insertion of the elongated member, a tissue wedge or targeting needle may be used to wand between the bone fasteners to ensure a clean tissue plane has been formed between the bone fasteners. An end of the elongated member may be inserted at an angle or substantially longitudinally in a passage and/or channel of an extender coupled to a bone fastener assembly. Inserting the elongated member at an angle or substantially longitudinally allows the length of the incision and/or the area of the tissue plane to remain advantageously small. In some embodiments, extenders coupled to anchored bone fastener assemblies may remain essentially unconstrained relative to each other during insertion of the elongated member. In certain embodiments, angular orientation of the collars may determine a trajectory of the elongated member down the extenders and into collars of the bone fastener assemblies. Inserting the elongated member down two or more extenders and through an open path (i.e., the tissue plane) may allow a medical practitioner to avoid surgical difficulties associated with anatomical abnormalities and/or misalignment of system components (e.g., in multi-level stabilization procedures). A positioning tool may be used to guide the elongated member down the extenders into slots in the collars.

[**0120**] During some spinal procedures, the elongated member may not initially seat in collars of the bone fastener assemblies. During such procedures, a reducer may be used to seat the elongated member in the collars of the bone fastener assemblies.

[**0121**] Reducer **194**, depicted in **FIG. 28**, may be used in combination with a sleeve to forcefully reduce the difference in anterior-posterior position of one vertebral body with respect to one or more adjacent vertebral bodies coupled to a spinal stabilization system. In some cases, reduction may be performed to correct a deformity in a patient's spine. Reducer **194** may be used to achieve reduction across one or more vertebral levels at a time. For a multi-level spinal stabilization system, reduction may facilitate seating of an elongated member in a collar of the spinal stabilization system. Use of a reducer with a spinal stabilization system may allow a final position of a spine to be manipulated according to the contour of the elongated member.

[0122] Before reduction is initiated, elongated member **104** may be positioned in collars **112** coupled to extenders **170** as depicted in **FIG. 30**. Closure members **106** may be positioned in one or more collars **112** such that elongated member **104** is at least loosely positioned in one or more of the collars. Elongated member **104** may be fully seated in collars **112**. Elongated member **104** may not be fully seated in collar **112'**. **FIG. 31** depicts an enlarged perspective view of elongated member **104** proximate collar **112'**.

[0123] Sleeve **186** may be positioned over extender **170**, engaging elongated member **104** in groove **192**, as depicted in **FIG. 29**. In a multi-level spinal stabilization system, elongated member **104** may be fixed in place at one or more positions (e.g., secured in one or more of the outer collars with a closure member). A length of hollow shaft **188** of sleeve **186** may be chosen such that a proximal end of extender **170** protrudes from the proximal opening of the sleeve. In some embodiments, an instrumentation kit may provide sleeves **186** and extenders **170** that are sized to be used together such that recesses **238** in a proximal end of extender **170** are exposed above sleeve **186** during use. In certain embodiments, recesses **238** in extender **170** may be complementary to bosses **248** of reducer **194** depicted in **FIG. 28**.

[0124] **FIG. 32** depicts reducer **194** coupled to extender **170** above a proximal opening of sleeve **186**. To couple reducer **194** to extender, grips **240** may be spread apart to open arms **246** of the reducer. The bosses on arms **246** may be positioned proximate the recesses of extender **170**. Grips **240** may be moved toward each other until the bosses of reducer **194** engage the recesses in extender **170**. When the bosses engage the recesses, teeth of the locking mechanism **242** of reducer **194** may be engaged to inhibit undesired separation of arms **246** of the reducer. When the bosses engage the recesses, the base of reducer **194** may be positioned on handle **190** of sleeve **186**.

[0125] With reducer **194** coupled to extender **170** and aligned with handle **190** of sleeve **186**, reduction may be achieved by rotating grips **240** about base **244** downward toward the handle. As grips **240** of reducer **194** are forced toward handle **190** of sleeve **186**, extender **170** may translate upward through hollow shaft **188** of the sleeve. Translation of extender **170** upward through hollow shaft **188** may effectively pull the vertebral body to which the extender is coupled toward elongated member **104**, seating the elongated member in collar **112**. Grips **240** of reducer **194** may be rotated towards handle **190** of sleeve **186** until elongated member **104** is seated in collar **112**, as depicted in **FIG. 33**. In some embodiments, reducer **194** may move extender **170** a vertical distance of from about 0.1 mm to about 40 mm. For example, reducer **194** may move extender **170** a vertical distance of about 10 mm during use. For example, vertebral reduction of about 6 mm to about 12 mm may be achieved. In some embodiments, a first vertebral body may be translated a distance of at least 5 mm relative to a second vertebral body.

[0126] With elongated member **104** fully seated in collar **112**, reduction may be maintained by maintaining a force on reducer **194** that drives grips **240** towards handle **190** of sleeve **186**. A closure member driver may be inserted in extender **170** to secure a closure member in collar **112**. Securing a closure member in collar **112** may fasten elongated member **104** in place. In some embodiments, sleeve **186** may also be used as a counter torque wrench during tightening of the closure member to inhibit counteract force applied to collar by rotation of the closure member. Reducer **194** may be removed from extender **170**. The reduction procedure may advantageously be performed by one person.

[0127] After an elongated member has been positioned and seated in collars as desired, closure members may be used to secure the elongated member to the collars. One or more counter torque wrenches (e.g., sleeves) may be used during shearing of the tool portions of the closure members.

[0128] Further modifications and alternative embodiments of various aspects of the invention will be apparent to those skilled in the art in view of this description. Accordingly, this description is to be construed as illustrative only and is for the purpose of teaching those skilled in the art the general manner of carrying out the invention. It is to be understood that the forms of the invention shown and described herein are to be taken as the presently preferred embodiments. Elements and materials may be substituted for those illustrated and described herein, parts and processes may be reversed, and certain features of the invention may be utilized independently, all as would be apparent to one skilled in the art after having the benefit of this description of the invention. Changes may be made in the elements described herein without departing from the spirit and scope of the invention as described in the following claims.

What is claimed is:

1. A system for reduction of one or more vertebral bodies of a human spine, comprising:

a collar configured to couple to a human vertebra;

an extender configured to couple to the collar;

an elongated member configured to be positioned in the collar; and

a reducer configured to couple to the elongated member and the extender, wherein the reducer seats the elongated member in the collar.

2. The system of claim 1, further comprising a closure member configured to be coupled to the collar when the reducer seats the elongated member in the collar.

3. The system of claim 1, further comprising a driver configured to secure a closure member to the collar.

4. The system of claim 1, wherein the collar is a portion of a bone fastener assembly.

5. The system of claim 1, wherein the reducer comprises at least one boss configured to couple to a recess in the extender, and wherein the reducer comprises a base configured to couple to a sleeve positioned in working relation to the extender.

6. The system of claim 1, further comprising an extender configured to couple to the collar, wherein the reducer comprises a hollow shaft configured to surround a portion of the extender and contact the elongated member, wherein the reducer comprises a ring configured to engage a flange of the extender, and wherein the reducer comprises a rotator, wherein turning the rotator in a first direction moves the ring away from the elongated member and seats the elongated member in the collar.

7. A system for reduction of one or more vertebral bodies of a human spine, comprising:

a collar configured to couple to a human vertebra;

an extender configured to couple to the collar;

an elongated member configured to be positioned in the collar;

a sleeve configured to surround a portion of the extender and couple to the elongated member; and

a reducer configured to couple to the extender and to the sleeve, wherein rotation of the reducer relative to the sleeve is configured to seat the elongated member in the collar.

8. The system of claim 7, further comprising a closure member configured to couple the collar to secure the elongated member relative to the collar.

9. The system of claim 7, further comprising a driver configured couple to a closure member, wherein the driver is configured to be positioned in the extender when the reducer is in use to seat the elongated member in the collar.

10. The system of claim 7, wherein the reducer comprises bosses that engage recesses in the extender.

11. A reducer comprising:

a grip;

a base coupled to the grip, wherein the base is configured to couple to a sleeve in contact with an elongated member;

an arm coupled to the base, wherein the arm is configured to couple to an extender attached to a collar of a bone fastener assembly; and

wherein rotation of the grip when the arm is coupled to the extender raises the extender relative to the sleeve.

12. The reducer of claim 11, wherein the arm comprises a boss configured to couple to a recess in the extender.

13. The reducer of claim 11, further comprising a locking mechanism to inhibit movement of the arm.

14. A device for reduction of a vertebral body of a human spine, comprising:

a tube configured to accept an extender, wherein a distal end of the extender is coupled to a collar of a spinal stabilization system during use, wherein the spinal stabilization system is coupled to the vertebral body during use, and wherein a distal portion of the tube is configured to engage an elongated member of the spinal stabilization system proximate the collar during use; and

a movement mechanism coupled to a proximal portion of the tube, wherein a portion of the movement mechanism is configured to couple to a proximal end of the extender above a skin surface during use, and wherein the device is configured such that engaging the movement mechanism during use translates the vertebral body toward the proximal portion of the tube to seat the elongated member in the collar.

15. The device of claim 14, further comprising a release mechanism coupled to the movement mechanism, wherein the release mechanism is configured such that engaging the release mechanism releases the extender from the movement mechanism.

16. A method of reducing one or more vertebral bodies of a human spine, comprising:

attaching a first collar to a first vertebral body;

attaching a second collar to a second vertebral body;

coupling the first collar to the second collar; and

translating the first vertebral body relative to the second vertebral body from above a surface of the skin.

17. The method of claim 16, wherein coupling the first collar to the second collar comprises coupling an elongated member to the first collar and to the second collar, and further comprising coupling a reducer to the elongated member proximate the first collar and using the reducer to translate the first vertebral body toward a proximal end of the reducer.

18. The method of claim 16, further comprising securing a position of the first vertebral body relative to a position of the second vertebral body following translation of the first vertebral body.

19. The method of claim 16, wherein translating the first vertebral body relative to the second vertebral body comprises translating the first vertebral body by at least 5 mm.

20. The method of claim 16, further attaching a third collar to a third vertebral body, and coupling the third collar to the first collar or the second collar.

21. The method of claim 16, further comprising attaching a third collar to a third vertebral body, and coupling the third collar to the first collar and the second collar.

22. A method of reducing one or more vertebral bodies of a human spine, comprising:

coupling a reducer to a collar of a first bone fastener assembly secured to a first vertebra;

coupling the reducer to an elongated member that is secured to a second vertebra; and

activating the reducer to seat the elongated member in the collar of the first bone fastener assembly.

23. The method of claim 22, wherein coupling the reducer to the collar comprises attaching the reducer to recesses in an extender coupled to the extender.

24. The method of claim 22, wherein coupling the reducer to the elongated member comprises placing a sleeve over an extender, wherein the extender is coupled to the collar, coupling the reducer to the extender, and placing a base of the reducer on a handle of the sleeve.

25. The method of claim 22, further comprising coupling a closure member to the collar when the elongated member is seated in the collar to secure the elongated member to the collar.

* * * * *