Jan. 19, 1932. V. C. BROWN 1,841,466

APPARATUS FOR DEVELOPING LIGHT SENSITIVE MATERIAL

Filed Jan. 16, 1928

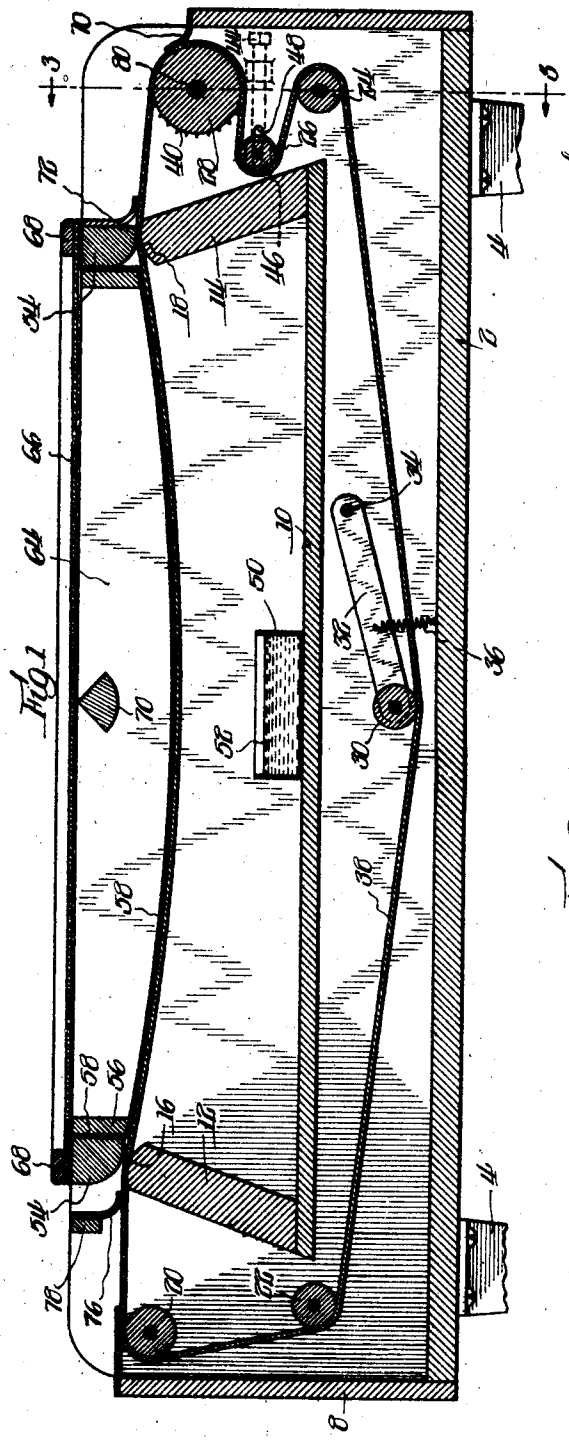

Fig. 1

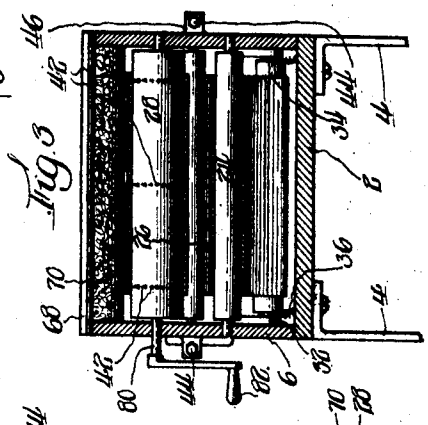

Fig. 3

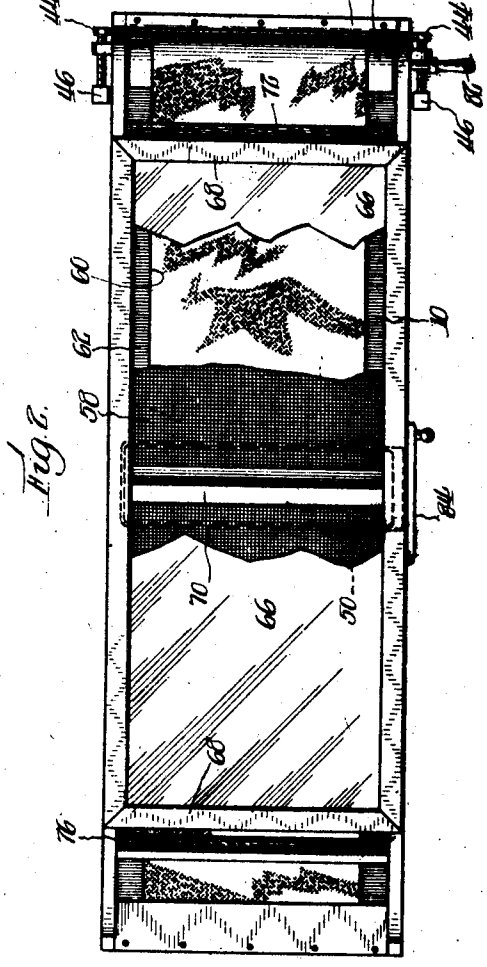

Fig. 2

Inventor,
V. C. Brown,
By Cheever & Cox
attys.

Patented Jan. 19, 1932 1,841,466

# UNITED STATES PATENT OFFICE

VIRGIL C. BROWN, OF MONROE, LOUISIANA, ASSIGNOR TO EUGENE DIETZGEN COMPANY, OF CHICAGO, ILLINOIS, A CORPORATION OF DELAWARE

## APPARATUS FOR DEVELOPING LIGHT SENSITIVE MATERIAL

Application filed January 16, 1928. Serial No. 247,024.

My invention relates to an improved apparatus for developing light sensitive material, such as paper or the like, by the action of alkaline gases such for instance as ammonia gas.

One of the objects of my invention resides in providing an improved device for feeding light sensitive material either in sheet or continuous strip form into and out of a cabinet or other enclosure containing developing gas and in a manner so as to practically prevent the escape of the gas while the light sensitive material is being introduced thereinto and discharged therefrom.

Still another object of my invention resides in providing an improved type of device for developing light sensitive material wherein the developing chamber containing the developing gas is provided with a feeding mechanism including a continuously traveling carrier adapted to travel across and in contact with a re-active stationary feeding surface between which and the traveling carrier the light sensitive material is introduced so that by the travel of the carrier the light sensitive material will be dragged in contact with the stationary re-active surface entirely through and out of the developing cabinet.

Still another object of my invention resides in providing an improved type of device of the above character adapted for feeding either continuous strips or sheets of light sensitive material continuously or interruptedly through a developing chamber containing developing gas and in a manner so as practically to prevent the escape of the gas from the chamber during the passage of the light sensitive material thereinto, therethrough and thereoutof.

These and other objects of my invention will be apparent from a perusal of the following specification when taken in connection with the accompanying drawings, wherein—

Fig. 1 is a side sectional view of the preferred embodiment of my machine for carrying out my method;

Fig. 2 is a top plane view of my improved machine; and

Fig. 3 is a section on line 3—3 of Fig. 1.

To illustrate my invention, I have shown on the drawings a cabinet adapted to contain the developing gas such as ammonia gas. This cabinet is provided with an inlet door and an outlet door into which the light sensitive material, such as a sheet of light sensitive paper or a continuous strip of light sensitive paper, may be introduced into the cabinet and I provide within the cabinet a feeding means for feeding this light sensitive material through the cabinet and out the exit door. This feeding means is constructed so as to handle either the sheets or the continuous strips. I feed the paper through the developing chamber by dragging it, through the agency of a traveling blanket or belt, against a substantially smooth re-active surface which, in the present instance, is preferably a foraminated stationary member such as a copper wire screen through which the developing gases may readily pass into contact with the light sensitive side of the paper as it is dragged by the belt through the developing chamber. In this manner either relatively short sheets of paper may be fed into and through the casing, or continuous strips may be fed through the casing.

Referring now to the drawings in detail, the preferred embodiment of my machine comprises a preferably wooden casing 2 mounted on standards 4. This casing 2 has sides 6 and ends 8. In the casing I provide a horizontal ledge or support 10 having preferably upwardly extending supports 12 and 14 which incline inwardly and are provided with smooth upper surfaces 16 and 18 respectively over which the belt hereinafter described is adapted to pass. These upper surfaces 16 and 18 preferably extend the width of the belt. In addition I provide at the ends of the casing, guide rolls 20, 22, 24 and 26 and a power or manually driven roll 28. I provide another roll 30 in the lower central portion of the casing pivotally mounted on an arm 32, in turn, pivoted at 34 to the sides of the casing. This arm 32 is normally pulled down by a spring 36 so as to engage the driving feed belt or blanket 38 and keep it taut. This continuous belt or blanket passes over all of these rollers in turn and

is fed either by frictional engagement with the driving roller 28 or by means of relatively small teeth 40 on the said roll 28 which engage the spaced feed apertures on the belt somewhat after the manner of the feed of a moving picture film on its reel. It will be understood that any type of device for feeding this continuous belt may be utilized. In some instances I provide take-up screws 44 at each side of the box alternating the position of either end of the shaft 46 on which the guide roll 26 is mounted. In this manner the tension of either side of the belt may be altered so as to keep the belt in feeding alignment or registration with its backing screen hereinafter described and also with respect to the guide rolls. This shaft 46 in turn may be slid forward and backward by the adjustment of the screws in a slot 48 in the sides of the box.

A platform 10 within the casing 2 is adapted to support a pan 50 containing liquid ammonia 52 from which arise ammonia gases for developing the light sensitive material.

The top of my casing 2 or cabinet is closed by means of a suitable lid consisting of a main frame 54 substantially of rectangular shape between which and an inner frame 56 is mounted a foraminated re-active backing surface or drag surface 58 preferably formed of copper wire screening or any other open mesh of relatively rigid material may be used provided the same is substantilly smooth whereby to provide a relatively smooth but firm backing surface over which the light sensitive material may be dragged by means of the traveling belt 38.

In the present instance this copper wire screen is slightly bowed in a downward direction and extends across the width of the casing 2 as clearly indicated in Figure 2 of the drawings. It will be seen that the belt 38 is of less width than the casing 2 and of less width than the screen so as to leave a space 62 on each side of the belt so that the developing gases from the pan 52 may arise through the spaces 62 at the edges of the belt and pass through the screen at such spaces and the longitudinal sides of the casing; thus the developing gases rising at these points, will pass upwardly and into the hollow space 64, see Fig. 1, above the wire mesh screen 58, from which point these developing gases are free to pass through the open meshes of the screen into contact with the sensitive side of the light sensitive material, the same being fed into the machine with the light sensitive side uppermost.

The top of the screen portion is closed by a preferably transparent plate 66 held in position by means of an upper frame member 68 overlying the first frames 54 and 58. In addition, this upper portion is provided with a bracing rib 70 of any desirable cross-section. At the inlet end of the box, preferably shown at the right hand end of Fig. 1 of the drawings, I provide a felt or rubber strip 72 which is secured between the frame 54 and the frame 68 and the glass plate 66 and the lower end of which drags over the upper surface of the traveling belt or blanket or carrier 38 which may be composed of canvas or rubberized canvas or rubber textile fabric. In addition, a similar felt or rubber strip 74 is provided for wipingly engaging the traveling surface of the belt at the driving roll 28. Similarly a third strip of felt or rubber 76 is carried by a cross-bar 78 and arranged so as to wipingly engage the upper surface of the belt as it passes out of the cabinet and particularly as it passes over the curved portion 16 of the upright support 12.

Referring now to the operation of my improved device, the shaft 80 of the feed roll 28, when turned, as by a hand crank 82 or by a motor or other power means, the blanket or feed belt 38 or other carrier will be passed in a continuous manner over the guide rolls and particularly over the curved upper surfaces 16 and 18 of the upright supports 12 and 14 and thence over the curved, relatively smooth surface of the wire mesh screen 58 which provides a relatively firm re-active feeding carrier which is stationary and yet which is foraminated so that developing gases may pass therethrough and have access to the light sensitive side of the sheets or continuous strips of paper or the like to be developed. In this manner the light sensitive material is dragged by the traveling belt across this relatively smooth re-active surface 58 and passed out of the machine. For instance the paper sheets or continuous strip may be introduced to the felt flap 72 at one end of the machine and will be dragged through the machine and will pass out the opposite end of the machine in which case the felt flaps 72 and 76 prevent the escape of the developing gases from the inlet and outlet and at the same time serve to substantially wipe the occluded gases from the surface of the light sensitive material which has been developed. During the feed of the paper through the machine the developing gases will rise through the spaces 62 and will pass upwardly and over the wire mesh screen 58 and thence through the interstices or meshes of the same and into contact with the paper to be developed. At the same time the operation or development of the paper may be viewed through the transparent top 66.

The pan 50 of developing ammonia preferably extends the width of the apparatus and is introduced into the side of the casing on the support 10 by means of the door 84.

It will thus be apparent from the foregoing that I have provided a very simple device for developing either the shorter sheets of light sensitive material, such as paper, or the continuous strips and that by means of my

method and apparatus I am enabled to pass these sheets or strips either continuously through the machine or in an interrupted manner and that furthermore, I am enabled to permit the sheets to stay within the developing chamber any suitable length of time from which they may be quickly removed by manually operating the feed belt so as to drag the paper to be developed out of the machine when they have been developed the required amount. As in the present instance, the length of the wire screen constitutes the backing surface for regulating the feed so as to effectively and properly develop a sheet of light sensitive material or strip as it passes through the machine under the ordinary speed of the crank 82.

Having thus described my invention what I claim as new and desire to secure by Letters Patent is:—

1. In a developing apparatus, the combination of a cabinet provided with an inlet opening and a discharge opening, a plurality of guide members in said cabinet and a continuous blanket passing over said guide rolls and arranged so as to travel from the inlet opening to the discharge opening of said cabinet, means for so moving the blanket, a source of developing gas in said cabinet, a substantially firm foraminated member constituting a re-active feeding surface for said blanket and located between the inlet opening and the discharge opening of the cabinet and in a manner such that the blanket contacts therewith throughout its length, said re-active surface having a relatively smooth inner face with which the blanket contacts whereby, when light sensitive material is introduced through the inlet of said cabinet and between the blanket and the re-active surface, said light sensitive material will be dragged through said cabinet and developed by the action of the gas therein and will be discharged through the discharge of said cabinet.

2. In a developing apparatus, the combination of a cabinet having an inlet opening and a discharge opening and provided with a transparent top, a continuous belt disposed in said cabinet over guide members, said belt extending from the inlet opening to the discharge opening longitudinally of the cabinet and beneath said transparent member, means for introducing developing gas into said cabinet, a wire mesh screen in said cabinet extending longitudinally thereof with one end terminating adjacent the inlet of said cabinet and the other end terminating at the outlet of said cabinet, said wire mesh screen being located beneath the transparent member and being slightly curved and arranged so that the belt, in its travel, drags across the entire area of said screen throughout its length, and means for preventing the discharge of the gas from said inlet and outlet openings of the cabinet.

3. In a device of the class described, the combination of means forming a cabinet, said cabinet having intermediate its end and spaced therefrom a closure therefor comprising a frame having a transparent panel, said frame including a wire mesh screen depending into said cabinet, two guide members located immediately beneath the outside of the ends of said wire mesh screens and slightly spaced therefrom, a continuous belt adapted to pass over said guide members and over a plurality of other guide members in said cabinet, means for feeding said belt through said cabinet and over said guide supports and into contact with the wire mesh screen throughout its length, and packing members adapted to drag along the upper surface of said blanket at the entrance and discharge of said cabinet to prevent the escape of gas therefrom.

4. In a developing apparatus, the combination of an elongated box forming a cabinet, said box being provided with an open top and being formed with two upstanding supports, the upper ends of which are curved, said box containing guide rolls located at the end thereof on the outside of said upstanding supports, a belt arranged to pass in a continuous manner over said two upstanding supports and over said guide rolls, a frame carried by said cabinet and located immediately over said upstanding supports, said frame having an upper transparent panel and being provided with a depending foraminated re-active feeding surface having a smooth inner face into contact with which the belt passes during its feed through the cabinet, and strips of packing material carried by said frame and adapted wipingly to engage the upper surface of said traveling belt and means for taking up the slack in the belt.

5. The herein described apparatus for developing light sensitive paper which comprises means for feeding the paper between a stationary re-active surface which is smooth and foraminated for the passage of developing gases therethrough and a traveling blanket or carrier adapted to press firmly against the re-active surface whereby to drag the light sensitive paper across the surface of said re-active foraminated member and means for causing a gaseous developing medium to come into contact with said paper by passing through said foraminations.

6. In a device of the class described, the combination of a support, a plurality of guide rolls on said support, a traveling belt passing around said guide rolls, means associated with said rolls on said support for forming a developing chamber containing a chemically active developing gas one of said guide rolls being a slack take-up device and adapted to engage said belt, and another of said guide rolls having means for independ-

ently adjusting its ends whereby to correct the path of travel of said belt.

7. In a device of the class described, the combination of a cabinet adapted to contain developing gas, a continuously traveling blanket for feeding light sensitive material therethrough, a guide roll over which said blanket travels, said guide roll having its opposite ends provided with independent adjusting means in and for the purpose set forth.

8. In a device of the class described, the combination of a cabinet adapted to contain a source of developing ammonia gas, two spaced apart guide members at opposite ends of said cabinet and a continuous blanket passing over said guide members and into contact therewith whereby to feed light sensitive material through said cabinet and packing devices arranged adjacent said guide members and wipingly engaging that surface of the blanket which is opposite to the surface which contacts with said guide members.

9. In a device of the class described, the combination of a support, means providing a developing chamber having an open portion, a traveling belt mounted to move across said open portion and constituting a feeding member, a second feeding member on said support and cooperating with said means forming the developing chamber and with said belt whereby to provide a second feeding member between which and said belt, the light sensitive material is inserted for feeding movement, one of said feeding members being constructed and arranged to cooperate with portions of said developing chamber for substantially preventing the escape of gas from said developing chamber.

10. In a developing apparatus, the combination of an enclosing cabinet, a relatively rigid member therein having a smooth exterior wall portion providing a re-active feeding surface, a carrier adapted to lie against and travel along said surface, means for moving said carrier, means for introducing light sensitive material between said surface and said carrier whereby said material is dragged by said carrier along said surface, said member being foraminated and means for causing a developing gas to pass through the foraminations of said member and into contact with the light sensitive material to develop the same.

11. In a developing apparatus for developing light sensitive material by the action of a chemically active gaseous medium, the combination of foraminous means forming a feeding surface and means forming a source of gaseous medium adapted to communicate with the foraminations of said means, a movable feeding member adapted to lie against and drag across said surface for the purpose of transporting light sensitive material across said surface, and means for shifting said movable feeding member.

12. In a developing apparatus, the combination of a frame, a stationary feeding element comprising a foraminous member providing a relatively smooth reactive surface in its front face arranged in said frame, means forming a chemically active atmosphere behind the foraminous member, a traveling feeding element arranged to move across said relatively smooth surface, and means for introducing light sensitive material between said feeding elements.

In witness whereof, I have hereunto subscribed my name.

VIRGIL C. BROWN.