PATENT SPECIFICATION (11) 1 562 249

1 562 249

(21) Application No. 51665/76 (22) Filed 10 Dec. 1976
(31) Convention Application No. 9436/75
(32) Filed 12 Dec. 1975 in
(33) Austria (AT)
(44) Complete Specification published 5 March 1980
(51) INT CL³ B65H 29/12, 5/02
(52) Index at acceptance B8R 671 691 AJ11



(54) TRANSPORT SYSTEM FOR FLAT ARTICLES

(71) We, G.A.O. GESELLSCHAFT FÜR AUTOMATION AND ORGANISATION MBH, of Euckenstrasse 12, Munich Federal Republic of Germany, a German Company, do hereby declare the invention, for which we pray that a patent may be granted to us, and the method by which it is to be performed, to be particularly described in and by the following statement:—

The present invention relates to a transport system for flat material, such as bank notes, documents, and the like, wherein the articles to be conveyed, especially at high conveying rates, are clamped and thus guided between belts or bands and are desired to be substantially freely accessible in spots over as large an area as possible for checking purposes.

To ensure the substantially free accessibility, the conveying track would therefore have to be interrupted, which, of course, would entail uncertainties in the guiding of the articles to be conveyed. In order not to simplify checking it would also be possible in principle to have adjacent conveying sections far enough apart for the checking stations to be effective. It is, however, easy to see that this would create a longer uncontrolled free-flight path which would make less sure that the material coming from the delivery conveying section is properly introduced into the receiving conveying section.

Attempts have therefore been made to avoid these free-flight paths, and the problem has been solved differently by arranging several checking stations in a row to cover the whole surface of the paper. To do this, the conveyor belts are staggered in parts, so that during the checking operation different portions of the paper surface will be alternately covered up and exposed by the conveyor belts, which, in spite of there being no interruption in the guiding of the articles to be conveyed, allows the articles to be checked by optical means over their entire area and on both sides.

The special disadvantage of such checking sections lies in their dependence on the size and the typography of the articles to be conveyed, because such conveyor systems can always be optimized for one size only. If there are changes in the height or the typography of the articles to be conveyed, compromises must, as a rule, be made which may in many cases adversely affect the validity of the results of the check.

From German Offenlegungschrift (DET—OS 2,508,591) it is also known to provide, in building-brick ("modular") conveyor systems at the interfaces of the individiual sections (building bricks), overlapping passages which are to ensure perfect transfer of the articles to be conveyed. Since one side of each belt or band arrangement reaches from one building brick into the other, the building bricks are interlocked and thus are difficult to separate from each other.

The invention therefore follows a different approach and proposes a conveyor system with a substantially or entirely free-flight section which it is, believed offers the best possibility of performing checks at the surface of the articles to be conveyed.

According to the present invention there is provided a transport system which is suitable for normally flat material such as banknotes and documents the said system including a supply conveying section and a delivery conveying section, wherein the materials is guided between conveyor means such as belts or bands and wherein the material is substantially freely accessible from both sides over a short conveying path not having said conveyor means wherein at the end of the supply conveying section upstream of this substantially freely accessible conveying path and at the commencement of the delivery conveying section downstream of this substantially freely accessible conveyng path the conveying means each consist of a parallel pair of conveying rollers and wherein the conveying rollers of each pair of conveying rollers comprise interengaging profiles which are parts of circles concentric with the respective rotary axes, are arranged in superposed staggered relationship, project beyond the outer surface of the conveying rollers and impress the normally

flat material with reversible profiling.

Advantageously, protuberances of the profile can be formed by the conveyor belts or bands themselves; it is alternatively possible, however, to provide concentric, elastic rings on the rollers.

A particular advantage is that, in embodiments of the invention, the majority of whole surface of the article to be conveyed can be checked on both sides over the short conveying path at a fraction of the costs normally involved in the prior art. In addition, the embodiments permit a considerably simpler building brick construction because all building bricks can be constructed and mounted completely separately from each other, or interlocking of the building bricks by overlapping guide facilities is minimal.

If, in these latter special applications with minimal interlocking, advantage is to be taken only of the fact that the building-bricks form independent, isolated units, it is found advisable, particularly in the case of installations where documents are moved at low speeds, to bridge the short conveying path separations between the supply and receive conveying systems by means of additional, guide belt joints to guide the low speed documents.

In that case, the building bricks are no longer so easy to separate from each other so the cost of assembling or dissembling the supply and receive conveyor systems may be slightly higher; on the other hand, the advantages of the special arrangement lie in the fact that the individual building bricks continue to form independent units and thus can be constructed independently of each other and operated separately from each other for testing purposes or the like, Another advantage is that at low speeds, reliable transfer of the components from building brick to building brick is now ensured.

The invention will now be explained in more detail with reference to the accompanying drawings, showing, by way of example, a few embodiments of the invention, and wherein:

Fig. 1 is a top view of a separation between two conveying sections with a free-flight path;

Fig. 2 is a top view of a separation with a free-flight path and an optical surface-checking station;

Fig. 3 shows the pair of delivery rollers of the supply or delivery conveyor section;

Fig. 4 shows another embodiment of the invention in a band conveyor system;

Fig. 5 shows the pair of drive rollers with elastic rings;

Fig. 6 is a top view of a separation in an alternative embodiment between two conveying sections exhibited substantially, free-flight, and

Fig. 7 is a section through the pair of rollers of Fig. 6.

Fig. 1 shows a top view of the separation 17 between two conveying sections (building bricks 1, 2) with a free-flight path. The document delivered by the conveyor system of the building brick 1 from the direction of the arrow 12 is clamped between the conveyor belts 3, 4 and reaches the roller pair 8, 9, leaves the building brick 1, and moves into the conveyor system of the adjacent building brick 2. To ensure that the leading edge of the paper, having passed the roller pair 8, 9, reaches the roller pair 10, 11 without folding away toward the side, the shape of the roller pair 8, 9 according to the invention impresses on the paper a temporary wave profile which considerably increases the paper's longitudinal stiffness. Thus reinforced, the paper can bridge the separation 17 without additional mechanical guidance and is received by the entry side roller pair 10, 11 of the building brick 2. To prevent the document 7 from being crushed upon reaching the roller pair 10, 11, the latter has the same protuberances as the roller pair 8, 9.

Since the special design of the roller pairs 8, 9 and 10, 11 allows the documents to be transported over short distances without mechanical guidance, it is possible, as shown in Fig. 1, to make the conveying sections flush with the outside edges of the building bricks. This is particularly advantageous in that the individual building bricks can be combined and shifted relative to each other at will for servicing purposes or the like.

Fig. 2 shows another application. In this embodiment, which comprises an optical checking station, the delivery roller pair 8, 9 and the entry side roller pair 10, 11 are so far apart that the optical sensors 15, 16 have a sufficient field of view for checking the surfaces of the papers moving past. Depending on the length and strength of the paper, the distance between these two roller pairs can be varied within wide ranges and thus adapted to requirements.

Fig. 3 shows one possibility of forming the protuberances of the rollers 8, 9. This is achieved by causing the conveyor belts 3, 4 to project beyond the surface of the rollers 8, 9. It can also be seen that the conveyor belts of the roller 8 are staggered with respect to the conveyor belts of the roller 9 so as to be in engagement. This results in the illustrated deformation of the paper 7 during transport. The height 22 of the protuberances, which is dependent on the groove depth 20 and on the belt thickness 21, determines the deformation and, thus, the longitudinal stiffness of the paper. By varying these values, adaptation to the respective

type of paper can be achieved as required.

The example shown in Fig. 4 uses conveyor bands 23, 24. In the absence of grooves 19, the drive rollers can be simpler in design. By adjusting the distance between the rollers and changing the bands, adaptation to other types of paper, e.g. from normal paper to tissue paper, is relatively easy.

To meet the objects of the invention, it would be sufficient to provide only the delivery and entry-side roller pairs bordering the gap of the individual conveying sections with the special profile. To simplify stock-keeping of rollers, and since the provision of the remaining drive rollers with the special profile entials no operational disadvantages whatsoever, it is also possible to provide all drive rollers with the special profile. Through the effective stiffening of the paper, transfer from belt conveyor systems to roller conveyor systems is possible without the disadvantages of the known systems. To accomplish this, the drive rollers are formed with integral rubber protuberances 14, as shown in Fig. 5.

Figs. 6 and 7 show an embodiment of a transfer between conveying systems by means of which documents supplied at low speed and possibly deflected from the normal direction of transport are reliably guided from one building brick to another.

Fig. 6 is a top plan view of a separation between two building-bricks, and Fig. 7 a section through a roller pair as shown in Fig. 6.

As in Figs. 1 and 3, the rollers 25, 26 and 27, 28 carry in their grooves 19 staggered conveyor belts 29, 30 and 31, 32, whose function was explained above. In addition to the conveyor belts, there are now provided guide belts 33, 34 which link the drive rollers 25, 26 and 27, 28, respectively, and bridge the separation (Fig. 6). The arrangement of the guide belts 33, 34, four of which are arranged in pairs side by side and distributed over the whole width of the rollers, is shown in Fig. 7. It can also be seen that, unlike the conveyor belts, the guide belts of the rollers 25, 26 and 27, 28 are so deeply embedded in special grooves 36 as to be flush with the surfaces of the rollers. The guide belts are located in the gaps formed by the arrangement of the conveyor belt 29, 30 and lie opposite each other with respect to a document path and a certain distance apart.

As mentioned, it is advantageous to use, in an arrangement consisting of several building bricks, like drive rollers which then provide the documents with an invariable profile. Through the special arrangement of the guide belts, which, being said certain distance apart and so forming a gap, do not touch documents being transported through the gap in proper manner, the document profile achieved thus remains unchanged. Only the movement of a document which may have been deflected from the direction of transport at low speeds is corrected by means of the guide belts. Thus guide belts usually not touching the documents, but not conveyor belts, may bridge the free-flight separation gap.

The bridge gap still affords substantially free access to conveyor materials.

Finally it should be mentioned that the rollers 25 and 26, which are firmly mounted in operation, can be shifted perpendicular to the direction of transport, as indicated by the arrow 35 in Fig. 6, to permit easy handling of the belts during maintenance work.

WHAT WE CLAIM IS:—

1. A transport system which is suitable for normally flat material such as bank-notes and documents, the said system including a supply conveying section and a delivery conveying section wherein the material is guided between conveyor means such as belts or bands and wherein the material is substantially freely accessible from both sides over a short conveying path not having said conveyor means wherein at the end of the supply conveying section upstream of this substantially freely accessible conveying path and at the commencement of the delivery conveying section downstream of this substantially freely accessible conveying path the conveying means each consist of a parallel pair of conveying rollers and wherein the conveying rollers of each pair of conveying rollers comprise interengaging profiles which are parts of circles concentric with the respective rotary axes, are arranged in superposed staggered relationship, project beyond the outer surface of the conveying rollers and impress the normally flat material with reversible profiling.

2. A transport system according to claim 1, in which the conveying rollers have grooves in their outer surfaces in which the conveyor means are arranged.

3. A transport system according to claim 1 or claim 2, in which the pairs of conveying rollers of the supply or delivery conveying section exhibit the same profiling.

4. A transport system according to any preceding claim, in which the pairs of conveying rollers are connected beyond the short conveying path by very narrow endless guide belts which are spaced from each other transversely to the conveying direction and do not touch properly conveyed materials.

5. A transport system according to claim 4, in which the spacing is chosen so that only

the material departing from the normal conveying direction has its motion corrected.

6. A transport system according to claim 4 or claim 5 in which the guide belts lie in grooves in the drive rollers and are flush with the surfaces of the drive rollers.

7. A transport system according to any one of claims 4 to 6 in which the guide belts are arranged in pairs and the belts of each pair lie opposite each other with respect to a respective path for the conveyed material.

8. A transport system as claimed in claim 1 including an arrangement substantially as described herein with reference to Fig. 1, Fig. 2, Fig. 3, Fig. 4, Fig. 5, or Figs. 6 and 7 of the accompanying drawings.

JOHN ORCHARD & CO.,
Chartered Patent Agents,
Staple Inn Buildings North,
High Holborn,
London WC1V 7PZ.

Printed for Her Majesty's Stationery Office by the Courier Press, Leamington Spa, 1980.
Published by the Patent Office, 25 Southampton Buildings, London, WC2A 1AY, from which copies may be obtained.

1562249 COMPLETE SPECIFICATION

4 SHEETS *This drawing is a reproduction of the Original on a reduced scale*

Sheet 1

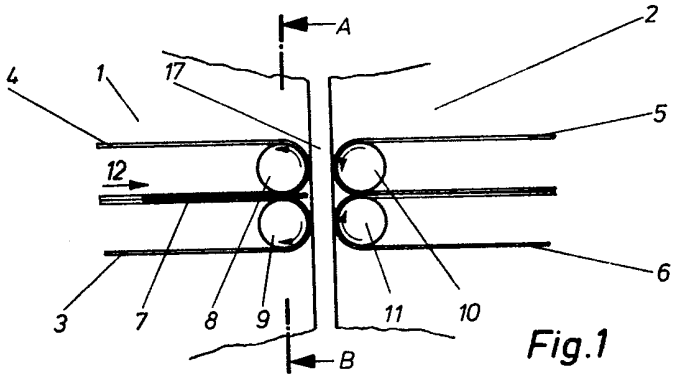

Fig.1

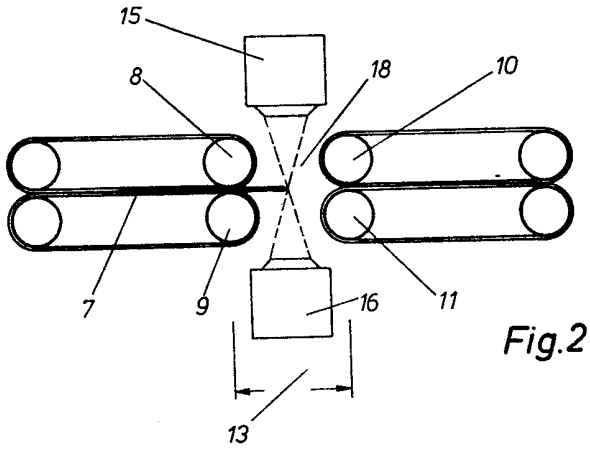

Fig.2

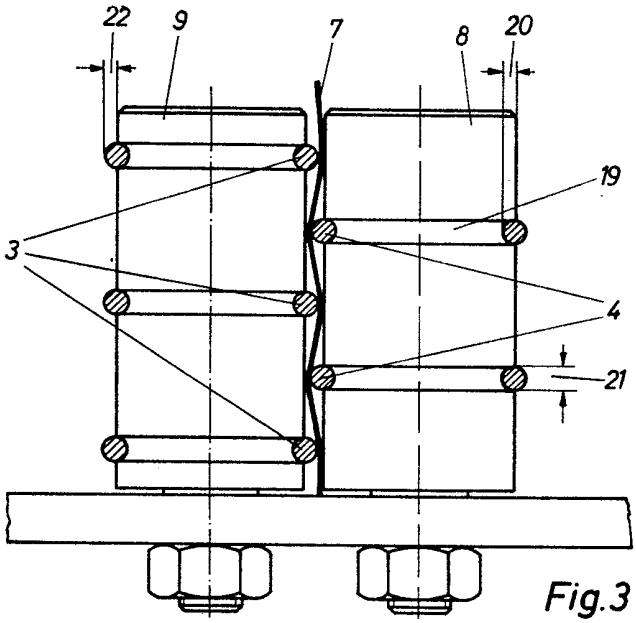

Fig.3

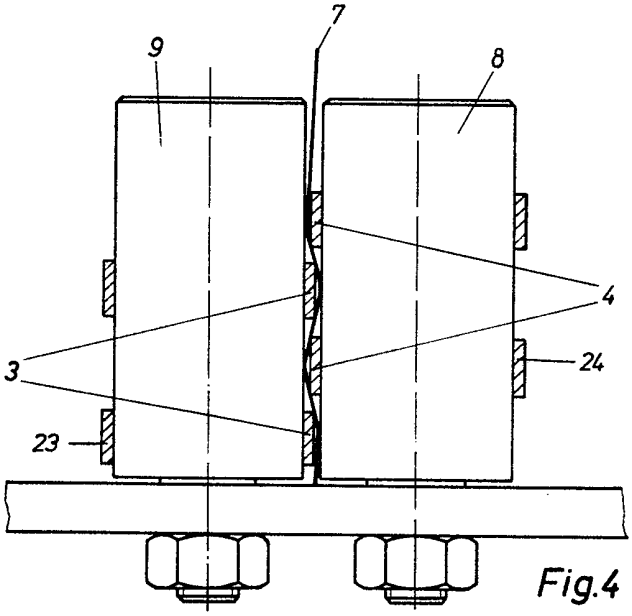

Fig.4

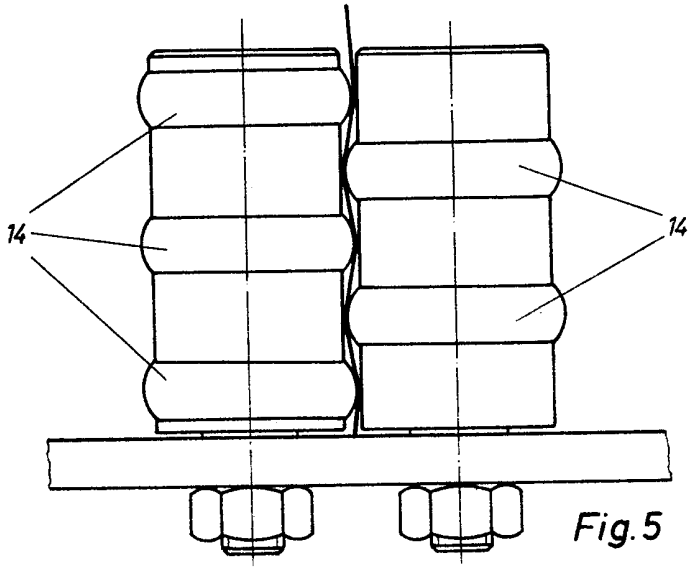

Fig.5

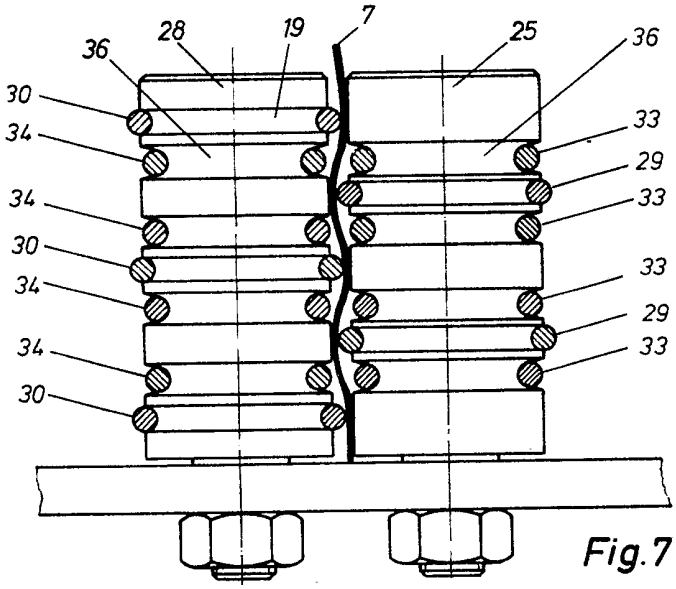

Fig.7

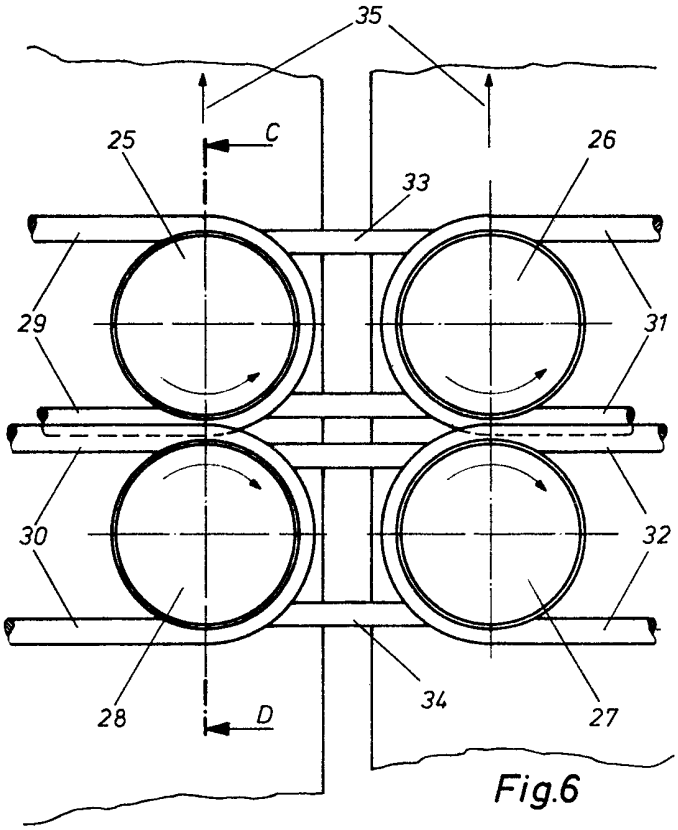

Fig.6